COLLINS

instruction book

Cedar Rapids Division | Collins Radio Company, Cedar Rapids, Iowa

30S-1
R-F Linear Amplifier

Collins Amateur Equipment Guarantee

The Collins Amateur Equipment described herein is sold under the following guarantee:

Collins agrees to repair or replace, without charge, any equipment, parts, or accessories which are defective as to workmanship or materials and which are returned to Collins at its factory or its designated Service Agency, transportation prepaid, provided:

(a) Buyer presents properly executed Warranty Verification Certificate.

(b) Notice of the claimed defect is given Collins or an authorized Service Agency, or an authorized Distributor, in writing, within 180 days from the date of purchase and goods are returned in accordance with Collins instructions.

(c) Equipment, accessories, tubes, and batteries not manufactured by Collins or from Collins designs are subject to only such adjustments as Collins may obtain from the supplier thereof.

(d) Any failure due to use of equipment for purposes other than those contemplated in normal amateur operations or in violation of Collins applicable Instruction Book shall not be deemed a defect within the meaning of these provisions.

This Warranty is void with respect to equipment which is altered, modified or repaired by other than Collins or Collins Authorized Service Agencies. However, alteration or modification in accordance with Collins Service Bulletins shall not affect this Warranty.

Collins reserves the right to make any change in design or to make additions to, or improvements in, Collins products without imposing any obligations upon Collins to install them in previously manufactured Collins products.

No other warranties, expressed or implied, shall be applicable to said equipment, and the foregoing shall constitute the Buyer's sole right and remedy under the agreements contained in these paragraphs. In no event shall Collins have any liability for consequential damages, or for loss, damage or expense directly or indirectly arising from the use of the products, or any inability to use them either separately or in combination with other equipment or materials or from any other cause.

NOTICE: With each equipment or set of equipments purchased, the distributor should furnish a Warranty Verification Certificate. It is necessary that this certificate accompany the equipment when it is returned for warranty repairs. Be sure that you receive it from your distributor.

Warranty Repairs

On the opposite page are listed the Service Agencies authorized to perform warranty repair on Collins Amateur Equipments.

If you should wish to return material or equipment direct to Collins under the guarantee, you should notify Collins, giving full particulars including the details listed below, insofar as applicable. If the item is thought to be defective, such notice must give full information as to nature of defect and identification (including part number if possible) of part considered defective. Upon receipt of such notice, Collins will promptly advise you respecting the return. Failure to secure our advice prior to the forwarding of the goods or failure to provide full particulars may cause unnecessary delay in handling of your returned merchandise.

ADDRESS:

Collins Radio Company
Amateur Product Office
Cedar Rapids, Iowa

INFORMATION NEEDED:

(A) Type number, name and serial number of equipment
(B) Date of delivery of equipment
(C) Date placed in service
(D) Number of hours of service
(E) Nature of trouble
(F) Cause of trouble if known
(G) Name of distributor from whom the equipment was purchased.

Equipment returned to the Service Agency or Collins for warranty repair must be accompanied with the Warranty Verification Certificate.

Out-of-warranty Repair, Modifications, Addition of Accessories, Alignment, etc.

For information on service of this type write to the address shown below. If you wish to return your equipment for repairs, etc., without prior correspondence, be sure to include the following information attached to the equipment inside the packing carton:

(1) Complete instructions detailing work to be performed.
(2) Your return address.
(3) Method of shipment by which the equipment should be returned.
(4) Special instructions.

DIRECT YOUR CORRESPONDENCE TO:

Collins Radio Company
Product Support Division
Cedar Rapids, Iowa

HOW TO ORDER REPLACEMENT PARTS:

When ordering replacement parts, please furnish the following information insofar as applicable:

INFORMATION NEEDED:

(A) Quantity required
(B) Collins part number (9 or 10 digit number) and description
(C) Item or symbol number obtained from parts list or schematic
(D) Collins type number, name and serial number of principal equipment
(E) Unit subassembly number (where applicable)

Collins Authorized Amateur Distributors and Service Agencies

ALABAMA

Ack Radio Supply Co.
3101 4th Avenue South
Birmingham 35233
Ph: 205 FA 2-0588
Attn: E. C. Atkerson/
Wm. Harmon

*Beddow Engineering Services
1501 Seventh Street SE
Decatur 35601
Ph: 205 353-6329/355-1026
Attn: Dr. C. P. Beddow

Electronic Wholesalers, Inc.
2310 Bob Wallace Ave. SW
Huntsville 35805
Ph: 205 534-2461
Attn: Joe H. Austin

Specialty Distributing Company
1276 Belt Line South Highway
Mobile 36609
Ph: 205 344-0450
Attn: Frank Stanley

ALASKA

Yukon Radio Supply, Inc.
(P.O. Box 406)
645 I Street
Anchorage 99501
Attn: A. E. Peterson

ARIZONA

Elliott Electronics, Inc.
418 N. 4th Avenue
Tucson 85705
Ph: 602 MA 4-2473
Attn: Bob Nordman

**Southwest Electronic Devices
(P.O. Box 3751)
Second Street at Madison
Phoenix 85030
Ph: 602 252-1741
Attn: Herman A. Middleton/
Clark Tatum

ARKANSAS

Moory's Wholesale Radio Co.
(P.O. Box 605)
12th & Jefferson Streets
DeWitt 72042
Ph: 501 WH 6-2820
Attn: Ed Moory

CALIFORNIA

**Amrad Electronics
999 Howard Avenue
Burlingame 94101
Ph: 415 DI 2-5757
Attn: J. Steventon

Amrad Supply, Inc.
3425 Balboa Street
San Francisco 94121
Ph: 415 SK 1-4661
Attn: David Bradley

*Communication Receiver Service
5016 Maplewood
Los Angeles 90004
Ph: 213 HO 2-2429
Attn: Charles C. Messman

Electronic City Inc.,
4001 West Burbank Blvd.,
Burbank 91505
Ph: 213 842-5275
Attn: Howard Pollyea

Elmar Electronics
140 - 11th Street at Madison
Oakland 94607
Ph: 415 TE 4-3311
Attn: Elvin Feige/M. L. Chirone/
Stan Johnson (TWX-(OA73)

**Henry Radio Inc.
931 N. Euclid
Anaheim 92801
Ph: 714 PR 2-9200
Attn: Walt Henry

**Henry Radio Co. Inc.
(P.O. Box 64398)
11240 W. Olympic Blvd.
Los Angeles 90064
Ph: 213 GR 7-6701
Attn: Ted Henry

Mission Ham Supplies
3316 Main Street
Riverside 92501
Ph: 714 OV 3-0523
Attn: William P. Hullquist

Quement Industrial Electronics
(P.O. Box 527)
1000 S. Bascom Avenue
San Jose 95128
Ph: 408 CY 4-0464
Attn: Frank Quement/Pete Phelps

Radio Products Sales, Inc.
1501 S. Hill Street
Los Angeles 90015
Ph: 213 RI 8-1271
Attn: Ken Rausin

Western Radio & TV Supply Co.
(P.O. Box 1728)
1415 India Street
San Diego 92101
Ph: 714 BE 9-0361
Attn: Art Stewart/Glen Cecil

COLORADO

**Burstein-Applebee Co. of Colorado
1237 - 16th Street
Denver 80202
Ph: 303 222-8986
Attn: Willard Wright/John Capone

CONNECTICUT

Corky's Division
Hatry of Hartford
100 High Street
Hartford 06118
Ph: 203 JA 7-1881
Attn: Edward C. Gedney

DISTRICT OF COLUMBIA

Electronic Wholesalers, Inc.
2345 Sherman Ave., NW
Washington 20001
Ph: 202 HU 3-5200
Attn: Richard E. Corbett

FLORIDA

**Amateur Electronic Supply
19 Azalea Park Shopping Center
Orlando 32807
Ph: 305 277-8281
Attn: Philip J. LaMarche

Amateur Radio Center, Inc.
2807-9 N.E. Second Avenue
Miami 33137
Ph: 305 FR 4-4101
Attn: Wiley Gilkison

*Cooper Radio Company
165 - 13th Street
North St. Petersburg (33)
Ph: 813 894-7607
Attn: Lon Cooper

*Electronic Systems, Inc.
2541 NW 95th Street
Miami 33147
Ph: 305 696-4841
Attn: Kenneth R. Gamble

**Electronic Wholesalers, Inc.
9390 NW 27th Avenue
Miami 33147
Ph: 305 OX 6-1620
Attn: Phil Konter/Paul Klein

**Grice Electronics, Inc.
300 East Wright Street
(P.O. Box 1911)
Pensacola 32501
Ph: 305 HE 3-4616
Attn: F. R. Grice, Jr./Virgil Wood/
Clarke Simms/Floyd Grice

**Kinkade Radio Supply, Inc.
1719 Grand Central Avenue
Tampa 33606
Ph: 813 253-6043
Attn: E. T. Kinkade

GEORGIA

Ack Radio Supply Company
554 Deering Road NW
Atlanta 30309
Ph: 404 873-5246
Attn: T. E. Atkerson

*Southeastern Engineering Service
1356 Carolyn Drive NE
Atlanta 30329
Ph: 404 634-2249
Attn: Harvey Minsk

Specialty Distributing Co., Inc.
763 Juniper NE
Atlanta 30308
Ph: 404 TR 3-2521
Attn: J. E. Eaton/ Doyle Hurley

HAWAII

**Honolulu Electronics
819 Keeaumoku Street
Honolulu 96814
Ph: 995-564
Attn: Thomas Teruya

ILLINOIS

Amateur Electronic Supply
6450 North Milwaukee Ave.
Chicago 60631
Ph: 312 RO 3-1030
Attn: Harold Wessels/Terry Sterman

Klaus Radio & Electric Company
403 E. Lake Street
Peoria 61614
Ph: 309 688-3401
Attn: Clifford Morris

Newark Electronics Corporation
223 W. Madison St.
Chicago 60606
Ph: 312 ST 2-2944
Attn: Joe Sheffer/Les Wilkins/A. L. Poncher

INDIANA

Brown Electronics, Inc.
1032 Broadway
Fort Wayne 46800
Ph: 219 AN 3382
Attn: A. A. Brown

Graham Electronics Supply, Inc.
122 S. Senate Avenue
Indianapolis 46225
Ph: 317 ME 4-8487
Attn: G. M. Graham/Dick Seigel/
H. H. Thompson

Radio Distributing Co., Inc.
(P.O. Box 1499)
1212 High Street
South Bend 46624
Ph: 219 AT 8-4665
Attn: William A. Davidson

IOWA

Radio Trade Supply Co.
1224 Grand Avenue
Des Moines 50309
Ph: 515 288-7237
Attn: Larry Woolis

World Radio Laboratories, Inc.
(P.O. Box 919)
3415 W. Broadway
Council Bluffs 51501
Ph: 712 328-1851
Attn: Alan McMillan/Leo Meyerson/
C. H. Williams

LOUISIANA

Crescent Electronic Supply, Inc.
537 S. Claiborne Avenue
New Orleans 70112
Ph: 504 JA 2-8726
Attn: S. L. Lemarie/Lou Vasalech

**Radio Parts, Inc.
1112 Magazine Street
New Orleans 70113
Ph: 504 522-0217
Attn: Irvine J. Levi

MARYLAND

Uncle George's Radio Ham Shack Div.
Electronic Distributors, Inc.
11324 Fern Street
Wheaton 21872
Ph: 301 LO 5-2262
Attn: Geo. J. Pasquale

MASSACHUSETTS

DeMambro Radio Supply, Inc.
1095 Commonwealth Ave.
Boston 02215
Ph: 617 AL 4-9000
Attn: Frank DeMambro/Floyd Dean

Graham Radio, Inc.
505 Main Street
Reading 01867
Ph: 617 944-4000
Attn: Robert T. Graham, Sr.

*Two-Way Radio Engineers, Inc.
1100 Tremont Street
Roxbury 01969
Ph: 617 GA 7-3511
Attn: Sherman M. Wolf/Jack Guigg

MICHIGAN

*Communication Service Company
201 South Lincoln
Charlotte 48813
Ph: 517 543-0360
Attn: Bart Rypstra

Electronic Distributors, Inc.
1960 Peck Street
Muskegon 49440
Ph: 616 PO 6-3196
Attn: Charles W. Schecter

Purchase Radio Supply
327 E. Hoover Avenue
Ann Arbor 48103
Ph: 313 NO 8-8696
Attn: Roy J. Purchase

Radio Supply & Engineering
90 Selden Avenue
Detroit 48201
Ph: 313 TE 1-3171
Attn: Joe Keese

Warren Radio Company
1710 South Westnedge
Kalamazoo 49001
Ph: 616 FI 2-5720
Attn: P. O. Willett

MINNESOTA

Lew Bonn Company
1211 LaSalle Avenue
Minneapolis 55403
Ph: 612 FE 9-6351
Attn: Joe Hotch

**Electronic Center, Inc.
107 3rd Avenue North
Minneapolis 55404
Ph: 612 FE 8-8678
Attn: Ward Jensen

MISSISSIPPI

*Coker Radio & TV Service
724 Lawrence Road
Jackson 39206
Ph: 601 366-4076
Attn: Ray C. Coker

MISSOURI

Walter Ashe Radio Company
1125 Pine Street
St. Louis 63101
Ph: 314 CH 1-1125
Attn: Joe Novak/Bill Dubord

Burstein-Applebee Co.
1012-1014 McGee St.
Kansas City 64106
Ph: 816 BA 1-1155
Attn: R. H. Friesz/Bob Hunter
(Ham Dept. 301 E. 55th Street)

Henry Radio Company
211 North Main
Butler 64730
Ph: 816 OR 9-3127
Attn: Bob Henry/Helen DeArmond

NEW HAMPSHIRE

Evans Radio
(P.O. Box 312)
Bow Junction
Route 3A
Concord 03302
Ph: 603 CA 5-3358
Attn: Eddie Andrew

NEW JERSEY

*Communication Service Co.
456 Elm Avenue
Maple Shade 08052
Ph: 609 NO 5-0358
Attn: George A. Ryan

Federated Purchaser, Inc.
155 U.S. Rt. 22
Springfield 07081
Ph: 201 AD 2-8200
Attn: Hal Thorn

*Warner Engineering Co., Inc.
239 Lorraine Ave.
Upper Montclair 07087
Ph: 201 PI 6-7900
Attn: Charles K. Atwater

NEW MEXICO

*Simms Communications Inc.
217 Camino Encantado
Santa Fe 87501
Ph: 505 YU 2-9502
Attn: Preston W. Simms

NEW YORK

Adirondack Radio Supply
(P.O. Box 88)
185-191 W. Main St.
Amsterdam 12010
Ph: 518 VI 2-8350
Attn: Ward Hinkle

*Amatronics, Inc.
91-46 Lefferts Blvd.
Richmond Hill 13144
Ph: 212 HI 1-7890
Attn: Raymond E. Morris

*Electronic Servicenter of New York
65-37 Queens Blvd.
Woodside 12789
Ph: 212 IL 7-7733
Attn: Irv Strauber

Ft. Orange Radio Distributing Co., Inc.
904-16 Broadway
Albany 12207
Ph: 518 HE 6-8411
Attn: Harry Miller/David Marks

Genesee Radio & Parts Co., Inc.
2550 Delaware Ave.
Buffalo 14216
Ph: 716 TR 3-9661
Attn: Martin Feigenbaum

Harrison Radio Corp.
144-24 Hillside Ave.
Jamaica, L. I. 11435
Ph: 212 RE 9-4102
Attn: Ben Snyder/Bernie Shapiro

Harrison Radio Corp.
225 Greenwich St.
New York 10007
Ph: 212 BA 7-7777
Attn: W. E. Harrison/Ben Snyder

Harvey Radio, Inc.
103 W. 43rd Street
New York 10036
Ph: 212 JU 2-1500
Attn: Harvey Sampson/George Zarrin

Rite Electronics, Inc.
1946 New York Avenue
Huntington Station 11746
Ph: 516 HA 7-4330
Attn: Louis Richman

NORTH CAROLINA

Electronic Wholesalers, Inc.
938 Burke Street
Winston-Salem 27101
Ph: 919 PA 5-8711
Attn: D. Watts

**Freck Radio & Supply Co., Inc.
38 Biltmore Avenue
Asheville 28801
Ph: 704 AL 3-3631
Attn: T. T. Freck

OHIO

Custom Electronics, Inc.
1918 South Brown Street
Dayton 45409
Ph: 513 223-3157
Attn: Richard Sauer/Everett Elder

*Service Agency only
**Distributor and Service Agency

Pioneer Electronic Supply Co.
5403 Prospect Avenue
Cleveland 44103
Ph: 216 432-0010
Attn: Bill Piwanka/Don Hasek/
Robert Gainer

Selectronic Supplies, Inc.
3185 Bellevue Road
Toledo 43606
Ph: 419 GR 4-5477
Attn: Glenn Ingersoll/Don Schaller

**Universal Service
114 N. Third Street
Columbus 43215
Ph: 614 CA 1-2335
Attn: Francis R. Gibb/Dick Lytle

OKLAHOMA

**Radio, Inc.
1000 South Main
Tulsa 74119
Ph: 918 LU 7-9124
Attn: E. R. Durham/E. V. Gunn

OREGON

**Portland Radio Supply Co.
1234 S. W. Stark Street
Portland 97205
Ph: 503 CA 8-8647
Attn: C. B. Lucas

PENNSYLVANIA

Cameradio Company
1121 Penn Avenue
Pittsburgh 15222
Ph: 412 EX 1-4000
Attn: Edward Cooper/Roy Leisifer

Ham Buerger
Rices Mill Road at Glenside Avenue
Wyncote 19195
Ph: 215 CA 4-1740
Attn: Howard C. Buerger

Radio Electric Service Company of Pa.
N.W. Corner 7th & Arch Streets
Philadelphia 19106
Ph: 215 WA 5-5840
Attn: Edward Miller

RHODE ISLAND

W. H. Edwards Company
116 Hartford Avenue
Providence 02909
Ph: 401 GA 1-6614
Attn: Sal Infantolino

SOUTH DAKOTA

Burghardt Radio Supply
(P.O. Box 746)
621 4th Street S. E.
Watertown 57201
Ph: 605 TU 6-5749
Attn: Stan Burghardt/Al Hodgin

TENNESSEE (formerly CENTRAL)

Electra Distributing Co.
1914 West End Avenue
Nashville 37203
Ph: 615 AL 5-8444
Attn: Richard B. Harris

W. & W. Distributing Company
644-646 Madison Avenue
(P.O. Box 436)
Memphis 38101
Ph: 901 JA 7-4628
Attn: Mrs S.D. Wooten/
J. D. Grimes

TEXAS

Amateur Electronics, Inc.
2802 Ross Avenue
Dallas 75201
Ph: 214 RI 8-9871
Attn: Walter L. Jackson/Wm. Alford

**Busacker Electronic Equipment Co., Inc.
(P.O. Box 13204)
1216 West Clay Street
Houston 77019
Ph: 713 JA 6-2578
Attn: Garth L. Johnson/Bob Tracey

*Communications Service, Inc.
(P.O. Box 10373)
1601 Dragon Street
Dallas 75207
Ph: 214 RI 7-1852
Attn: Cecil A. White, Jr.

**Electronic Equipment & Engineering
Company
805 South Staples St.
Corpus Christi 78404
Ph: 512 TU 3-9271
Attn: R. N. Douglas

Electronic Equipment & Engineering Co.
2606 Westheimer
Houston 77006
Ph: 713 JA 4-2558
Attn: Jack Castleberry

**Howard Radio Company
1475 Pine Street
Abilene 79601
Ph: 915 OR 2-9501
Attn: R. L. Howard/E. J. Daigre

Radio & TV Parts
1828 North St. Mary's
San Antonio 78212
Ph: 512 CA 6-5329
Attn: Marion Chelkowski/Jerry Barry

TEXAS (formerly Southern)

McNicol, Inc.
811 North Estrella Street
El Paso 79903
Ph: 915 LO 6-2936
Attn: C. C. McNicol/D. C. McNicol

UTAH

*Dwyer's TV & Communications
5455 Knollcrest Street
Murray 84647
Ph: 801 AM 6-6158
Attn: Jack E. Dwyer

Manwill Supply Co.
2511 South State Street
Salt Lake City 84100
Ph: 801 HU 4-6114
Attn: J. Stewart Manwill

WASHINGTON

Cascade Electronic Supply
19721 Scriber Lake Road
(P.O. Box 563)
Lynnwood 98036
Ph: 206 PR 6-0194
Attn: Keith Nelson

C & G Electronics, Inc.
2600 Second Avenue
Seattle 98100
Ph: 206 MA 3-4536
Attn: Dennis Reanier

C & G Electronic Co.
2502 Jefferson Avenue
Tacoma 98402
Ph: 206 BR 2-3181
Attn: Lloyd Norberg/Dave Nodnan

**HCJ Electronics
6904 East Sprague
Spokane 99206
Ph: 509 WA 4-2343
Attn: Ralph Farano

Northwest Electronics, Inc.
East 730 First Avenue
Spokane 99202
Ph: 509 KE 4-2644
Attn: J. P. McGoldrick

WEST VIRGINIA

Mountain Electronics
(P.O. Box 106)
708 Bigley
Charleston 25321
Ph: 304 344-3411
Attn: Sam Warden

WISCONSIN

Amateur Electronic Supply
3832 West Lisbon Ave.
Milwaukee 53208
Ph: 414 WE 3-3262
Attn: Steve Potyandy/Terry Sterman

Harris Radio Corporation
289 North Main Street
Fond du Lac 54395
Ph: 414 WA 2-4670
Attn: Harris E. Sterman

Satterfield Electronics, Inc.
1900 S. Park St.
Madison 53713
Ph: 608 AL 7-4801
Attn: Roy Rosser/A. W. Satterfield

Collins Authorized Service Agencies

ALABAMA

*Beddow Engineering Services
1501 Seventh Street SE
Decatur 35601
Ph: 205 353-6329/355-1026
Attn: Dr. C. P. Beddow

ARIZONA

**Southwest Electronic Devices
(P.O. Box 3751)
Second Street at Madison
Phoenix 85030
Ph: 602 252-1741
Attn: Herman A. Middleton/
Clark Tatum

CALIFORNIA

**Amrad Electronics
999 Howard Avenue
Burlingame 94101
Ph: 415 DI 2-5757
Attn: J. Steventon

*Communication Receiver Service
5016 Maplewood
Los Angeles 90004
Ph: 213 HO 2-2429
Attn: Charles C. Messman

**Henry Radio Inc.
931 N. Euclid
Anaheim 92801
Ph: 714 PR 2-9200
Attn: Walt Henry

**Henry Radio Co., Inc.
(P.O. Box 64398)
11240 W. Olympic Blvd.
Los Angeles 90064
Ph: 213 GR 7-6701
Attn: Ted Henry

COLORADO

**Burstein-Applebee Co. of Colorado
1237 - 16th Street
Denver 80202
Ph: 303 222-8986
Attn: Willard Wright/John Capone

*Service Agency only
**Distributor and Service
Agency

FLORIDA

**Amateur Electronic Supply
19 Azalea Park Shopping Center
Orlando 32807
Ph: 305 277-8281
Attn: Philip J. LaMarche

*Cooper Radio Company
165 - 13th Street
North St. Petersburg (33)
Ph: 813 894-7607
Attn: Lon Cooper

*Electronic Systems, Inc.
2541 NW 95th Street
Miami 33147
Ph: 305 696-4841
Attn: Kenneth R. Gamble

**Electronic Wholesalers, Inc.
9390 NW 27th Avenue
Miami 33147
Ph: 305 OX 6-1620
Attn: Phil Konter/Paul Klein

**Grice Electronics, Inc.
300 East Wright Street
(P.O. Box 1911)
Pensacola 32501
Ph: 305 HE 3-4616
Attn: F. R. Grice, Jr./Virgil Wood/
Clarke Simms/Floyd Grice

**Kinkade Radio Supply, Inc.
1719 Grand Central Avenue
Tampa 33606
Ph: 813 253-6043
Attn: E. T. Kinkade

GEORGIA

*Southeastern Engineering Service
1356 Carolyn Drive NE
Atlanta 30329
Ph: 404 634-2249
Attn: Harvey Minsk

HAWAII

**Honolulu Electronics
819 Keeaumoku Street
Honolulu 96814
Ph: 995-564
Attn: Thomas Teruya

LOUISIANA

**Radio Parts, Inc.
1112 Magazine Street
New Orleans 70113
Ph: 504 522-0217
Attn: Irvine J. Levi

MASSACHUSETTS

*Two-Way Radio Engineers, Inc.
1100 Tremont Street
Roxbury 01969
Ph: 617 GA 7-3511
Attn: Sherman M. Wolf/Jack Guiggey

MICHIGAN

*Communication Service Company
201 South Lincoln
Charlotte 48813
Ph: 517 543-0360
Attn: Bart Rypstra

MINNESOTA

**Electronic Center, Inc.
107 3rd Avenue North
Minneapolis 55404
Ph: 612 FE 8-8678
Attn: Ward Jensen

MISSISSIPPI

*Coker Radio & TV Service
724 Lawrence Road
Jackson 39206
Ph: 601 366-4076
Attn: Ray C. Coker

NEW JERSEY

*Communication Service Co.
456 Elm Avenue
Maple Shade 08052
Ph: 609 NO 5-0358
Attn: George A. Ryan

*Warner Engineering Co., Inc.
239 Lorraine Ave.
Upper Montclair 07087
Ph: 201 PI 6-7900
Attn: Charles K. Atwater

NEW MEXICO

*Simms Communications Inc.
217 Camino Encantado
Santa Fe 87501
Ph: 505 YU 2-9502
Attn: Preston W. Simms

NEW YORK

*Amatronics, Inc.
91-46 Lefferts Blvd.
Richmond Hill 13144
Ph: 212 HI 1-7890
Attn: Raymond E. Morris

*Electronic Servicenter of New York
65-37 Queens Blvd.
Woodside 12789
Ph: 212 IL 7-7733
Attn: Irv Strauber

NORTH CAROLINA

**Freck Radio & Supply Co., Inc.
38 Biltmore Avenue
Asheville 28801
Ph: 704 AL 3-3631
Attn: T. T. Freck

OHIO

**Universal Service
114 N. Third Street
Columbus 43215
Ph: 614 CA 1-2335
Attn: Francis R. Gibb/Dick Lytle

OKLAHOMA

*Radio, Inc.
1000 South Main
Tulsa 74119
Ph: 918 LU 7-9124
Attn: E. R. Durham/E. V. Gunn

OREGON

**Portland Radio Supply Co.
1234 S. W. Stark Street
Portland 97205
Ph: 503 CA 8-8647
Attn: C. B. Lucas

TEXAS

**Busacker Electronic
Equipment Co., Inc.
(P.O. Box 13204)
1216 West Clay Street
Houston 77019
Ph: 713 JA 6-2578
Attn: Garth L. Johnson/Bob Tracey

*Communications Service, Inc.
(P.O. Box 10373)
1601 Dragon Street
Dallas 75207
Ph: 214 RI 7-1852
Attn: Cecil A. White, Jr.

**Electronic Equipment &
Engineering Company
805 South Staples St.
Corpus Christi 78404
Ph: 512 TU 3-9271
Attn: R. N. Douglas

**Howard Radio Company
1475 Pine Street
Abilene 79601
Ph: 915 OR 2-9501
Attn: R. L. Howard/E. J. Daigre

UTAH

*Dwyer's TV & Communications
5455 Knollcrest Street
Murray 84647
Ph: 801 AM 6-6158
Attn: Jack E. Dwyer

WASHINGTON

**HCJ Electronics
6904 East Sprague
Spokane 99206
Ph: 509 WA 4-2343
Attn: Ralph Farano

30S-1
R-F Linear Amplifier

COLLINS

instruction book

Cedar Rapids Division | Collins Radio Company, Cedar Rapids, Iowa

©Collins Radio Company 1959, 1960, 1961, 1963, 1964

520-5879000-008311
8th Edition, 1 July 1964

1. General Description.

The 30S-1 R-F Linear Amplifier consists of a one-stage linear amplifier and the necessary power supplies. It is capable of maximum legal input power in the amateur bands between 3.5 and 29.7 mc. It operates in either CW or SSB service with any exciter (such as KWM-1, KWM-2, or 32S-1) capable of 80 watts PEP output. In addition, the amplifier may be operated outside the amateur bands at any frequency between 3.4 and 30 mc by retuning its input circuits.

TABLE 1. EQUIPMENT FURNISHED WITH 30S-1

QUANTITY	DESCRIPTION	FUNCTION	COLLINS PART NUMBER
1	A-c power cable, three number 12 wires, 10 feet long, with lugs on one end.	A-c power	545-3123-00
2	Shielded cables, 10 feet long, with phono plug (part number 361-0062-00) on each end.	Alc and antenna relay cables	426-2029-00
1	RG-58/U cable, 20.5 feet long, with phono plug (part number 361-0062-00) on each end.	R-f input cable	545-3121-00
1	RG-8A/U cable, 10 feet long, with type C connector (part number 357-9261-00) on each end.	R-f output cable	545-3122-00
1	Bag containing fuses.	Spares	544-6885-00
1	Polyethylene spiral wrapping six feet long.	Lacing the interconnecting cables	152-3370-00

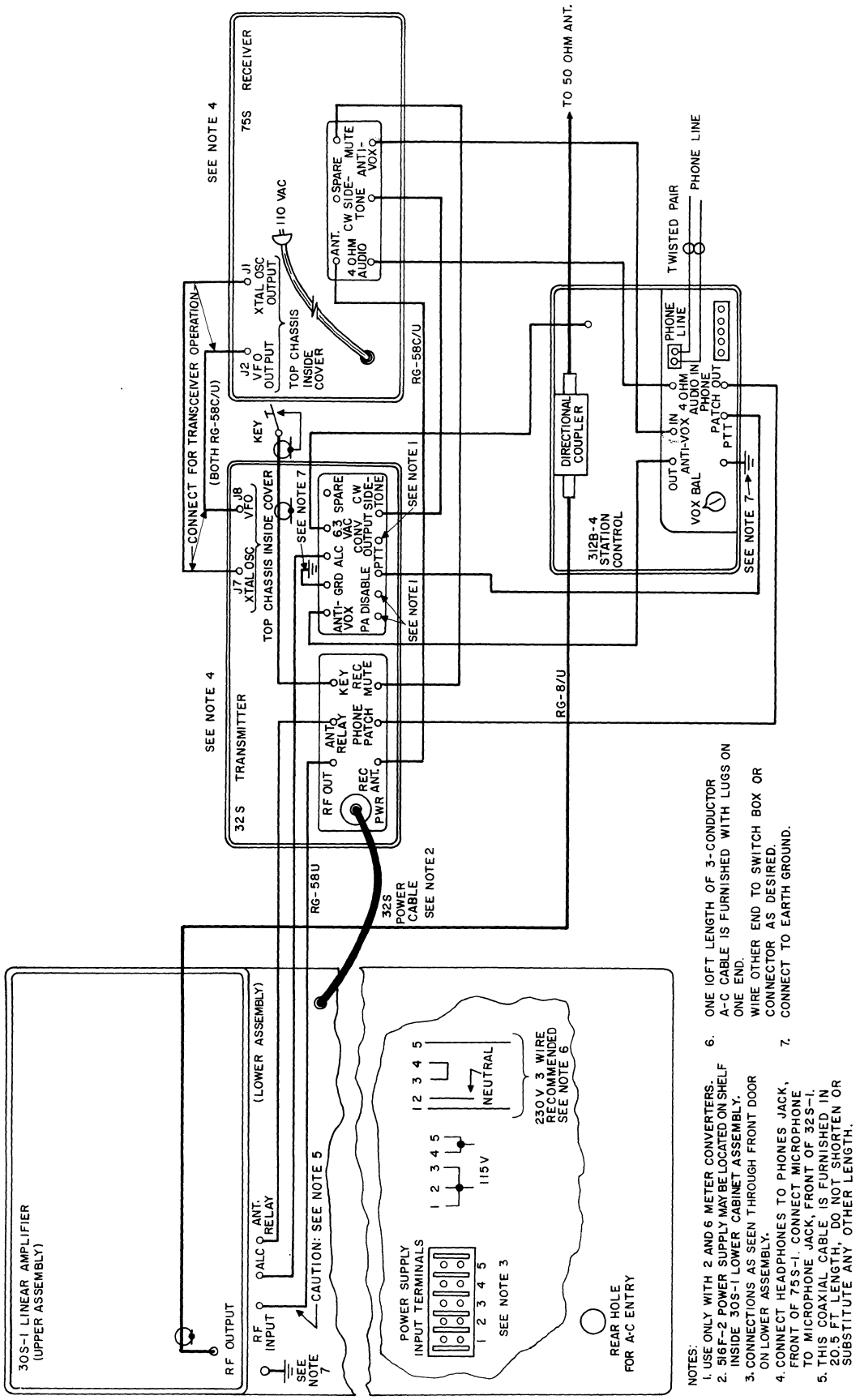

Figure 1. Station Interconnections with 32S-1 and 75S-1

2. Installation and Adjustments.

a. Set the 30S-1 on the floor beside the operating desk.

b. Unlock the power supply compartment door with the key furnished, pull out the door, and remove it. The key is packed in a small cloth bag which is tied to one of the knobs on the front panel. Uncrate the high-voltage transformer from its separate shipping container.

c. Loosen the exciter power supply shelf, shown in figure 4, and tip it back out of the way. This shelf provides space for mounting the exciter power supply inside the 30S-1 power compartment, if desired. The shelf may be loosened by removing three flat-head machine screws along the left side and two sheet-metal screws along the back edge. The screw heads on the left side are on the inside of the cabinet, and the screw heads along the rear are on the outside of the cabinet.

d. Mount the high-voltage power supply transformer over the mounting holes in the bottom plate of the compartment. Be sure to position the transformer with terminals 1, 2, 3, 4, 5, 6, 10, and 11 toward the bottom of the power supply compartment. Secure the transformer to the cabinet floor with the four screws supplied.

NOTE

In order to insert the rear screws in the mounting holes, it may be necessary to use beeswax or other type of adhesive on the screwdriver head.

e. Connect the center tap (terminal 8) to the solder terminal on the ceramic post insulator. This insulator is shown in figure 4 in front of the 3B28 filament transformer, T202.

f. Connect the remaining two secondary leads (numbered 7 and 9) to the lower terminals of the two surge-suppressing resistors, R222 and R223. These resistors are mounted behind the rectifier tube sockets.

g. Connect the wires of the cable to the terminal strip across the bottom edge of the transformer frame according to the wire code information of figure 4.

h. Replace the exciter power supply shelf. Secure the front edge of the shelf to the back edge of the transformer with spacers and screw provided. Replace the two sheet-metal screws along the rear, and replace the three flathead machine screws along the left side.

i. If the exciter power supply is preferred on the operating desk, disregard note 2 of figure 1 and note 1 of figures 2 and 3.

j. If the exciter power supply is preferred in the lower compartment of the 30S-1, remove the 516F-2 from its case before mounting on the shelf in the 30S-1. Plug the 32S-1 (or KWM-2) into the 516F-2. Plug the 516F-2 into J204. This jack is located inside the 30S-1 on the flange of the power supply shelf. See figure 4.

k. Connect the 30S-1 power supply input terminals to the a-c line according to the information given in figures 1 through 3. Run the a-c power supply leads through the entry conduit from the rear of the cabinet. Connect the white wire to the neutral. The a-c input terminals are shown in figure 4.

l. Install the rectifier tubes. Install plate caps on the rectifier tubes. Make sure tube V203 and the plug-in time-delay relay are installed on the shelf in the power supply. The delay relay looks like an octal-base tube. Refer to figure 14. Open the top cover of the r-f compartment. Check that thermal relay K102 is properly positioned as shown in figure 13. Check the entire r-f compartment to see that no short circuits exist.

m. Connect to 32S-1, KWM-2, or KWM-1 exciter as shown in figures 1, 2, or 3. A length of polyethylene spiral wrapping is included with the 30S-1 for making a neat bundle of interconnecting wires behind the operating desk.

n. If KWM-1 models <u>above</u> serial number 861 are used with the 30S-1, it will be necessary to bring out alc and "ground-on-transmit" connections to P1, terminals 19 and 20. This will allow the switching circuits of the KWM-1 to control the antenna change-over relays of the 30S-1 when connected to J203 on the 30S-1. Make these break-out connections to P1, using shielded wire and connect to 30S-1 ALC and ANT. RELAY jacks with phono plugs.

o. If KWM-1 models <u>below</u> serial number 861 are used with the 30S-1, it is necessary to make connections inside the KWM-1 for alc. Use an ohmmeter to locate the feedthrough capacitor, C169, which is connected to pin 19 of J5. Connect a wire from this feedthrough capacitor to pin 7 of tube socket XV10. In addition, it will be necessary to connect an external dropping resistor and relay as shown in the detail of figure 3, for KWM-1 control of change-over relays in the 30S-1. Using an ohmmeter, locate the feedthrough capacitor, C206, which is connected to pin 20 of J5 (in KWM-1). Connect a wire from terminal 8 of TB1 in KWM-1 to C206. Make corresponding break-out connection from P1-19 with shielded wire and connect break-out to 30S-1 ALC jack with phono plug. External to the KWM-1, connect a 10,000-ohm, 5-watt resistor and a relay coil in series from J5-20 to a ground on the rear of the KWM-1 chassis. Use a relay, such as Collins part number 972-1346-00, with a 10,000-ohm, 10-ma coil and a set of normally open contacts. Connect the normally open contacts through a piece of shielded wire (or microphone cable) and a phono plug to ANT. RELAY (J203) on the 30S-1. This arrangement will allow KWM-1 switching of 30S-1 changeover relays.

WARNING

BE CAREFUL to protect the operator from the 260-volt B+ present on the resistor and relay coil connections.

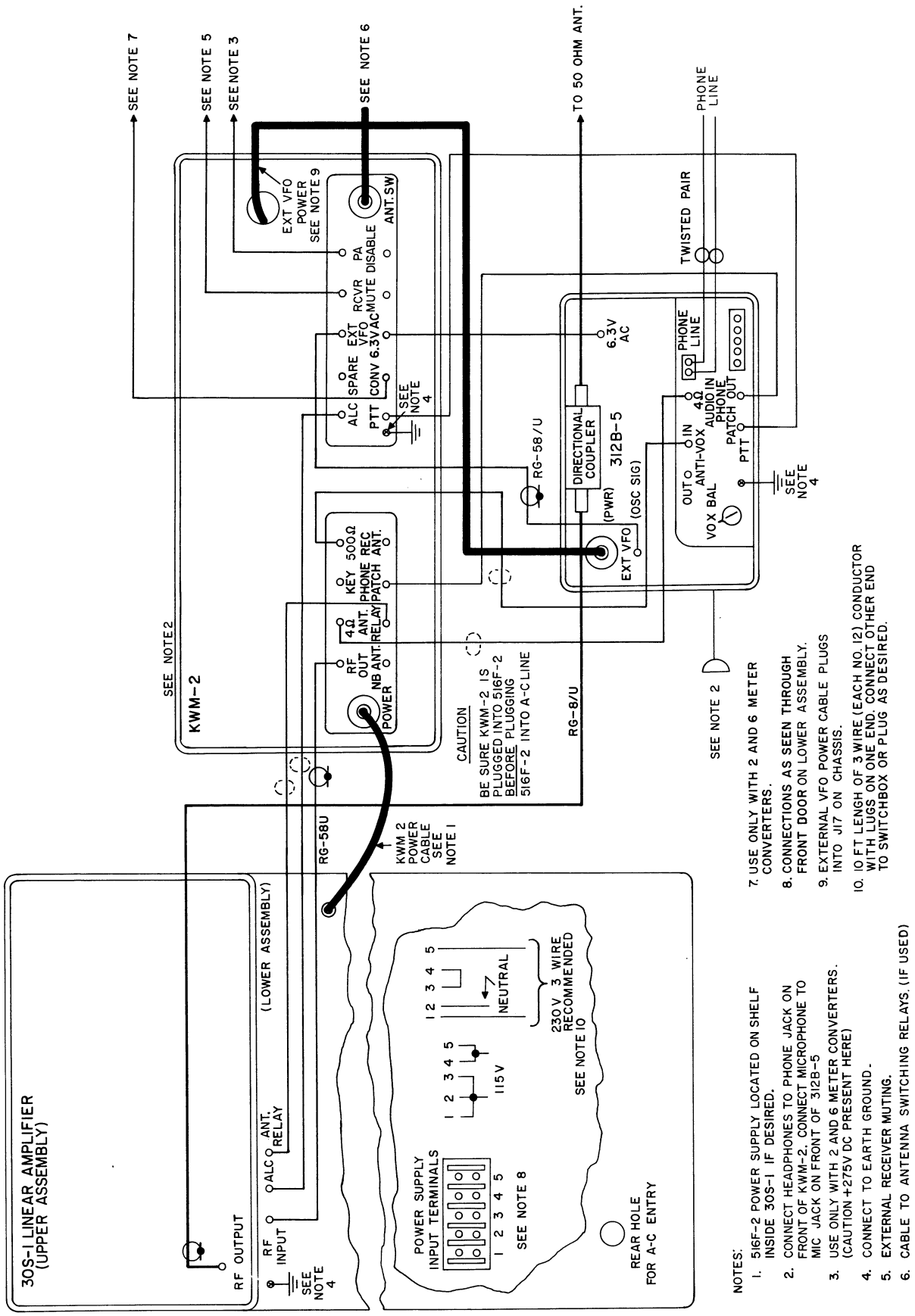

Figure 2. Station Interconnections with KWM-2

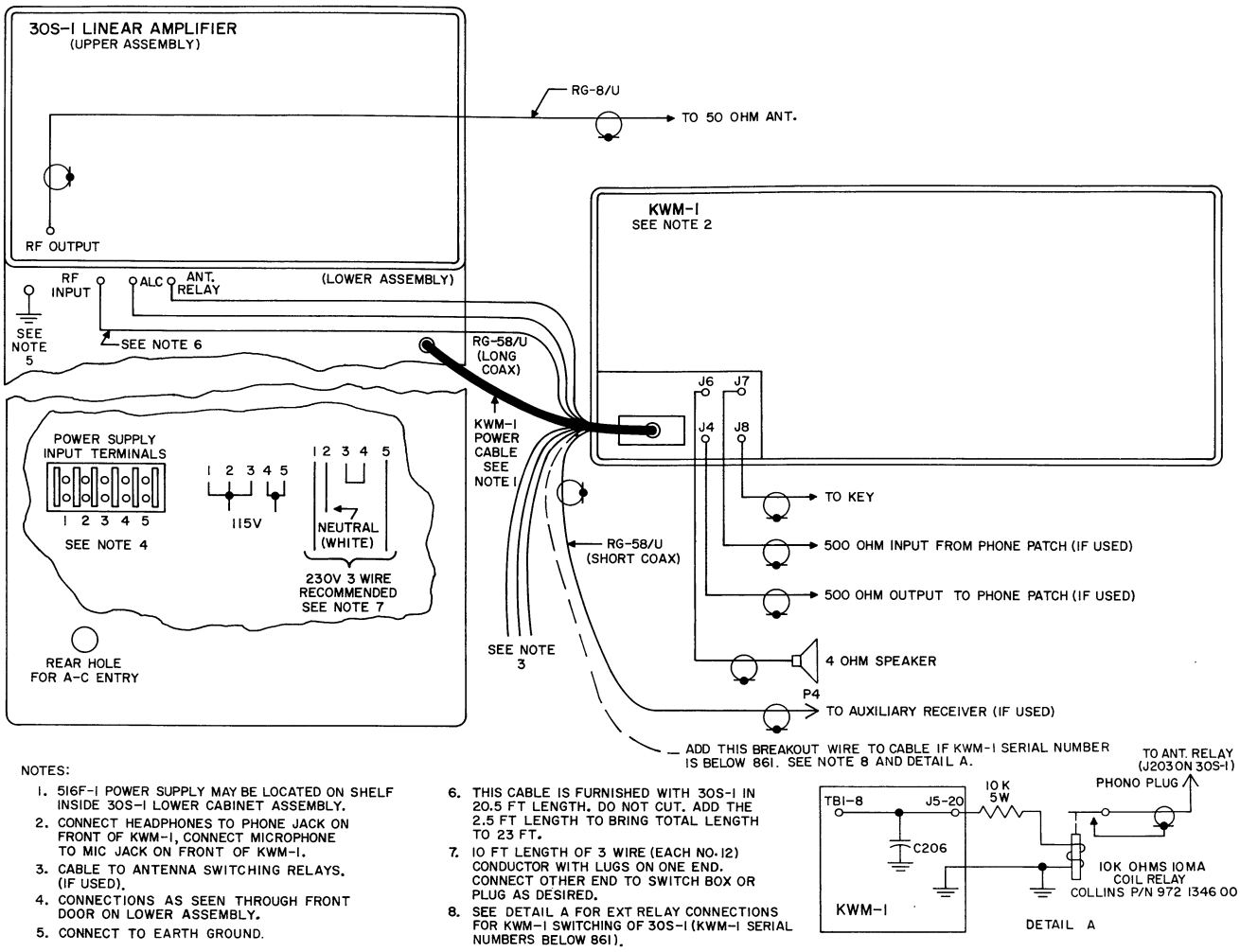

Figure 3. Station Interconnections with KWM-1

NOTE

The r-f cable supplied for connecting the 32S-1 or the KWM-2 to the 30S-1 is 20.5 feet long. DO NOT cut this cable. This length is optimum in maintaining the low-distortion figure for which the equipment was designed. An additional 2.5 feet of cable, with connectors, is supplied for connecting the KWM-1 output to the 30S-1. This makes a total of 23 feet for the KWM-1 connection.

p. Refer to figure 6. Turn POWER-OFF switch (1) to POWER position. Set SSB-CW switch (5) to SSB position and MULTIMETER switch (4) to FILAMENT VOLTAGE position. Be sure the plate power is off and the rectangular red pilot lamp (7) is out. The following adjustments are made without excitation.

q. Set filament voltage to 6.0 volts a-c with FIL ADJUST. Refer to figure 5.

r. Set MULTIMETER switch (4) to PLATE VOLTAGE position.

NOTE

Due to the three-minute delay of time-delay relay K202, plate voltage will not come on until three minutes after filament voltage has been applied. During this three-minute wait, the exciter may be operated as a low-power station.

WARNING

Do not make bias adjustments with power on. DO NOT BLOCK THE POWER SUPPLY INTERLOCK SWITCH. High voltage present in the power supply is dangerous to life.

s. After the three-minute time delay has elapsed, press the plate ON button, and the rectangular red pilot lamp should light. Plate voltage should be indicated on the MULTIMETER (9).

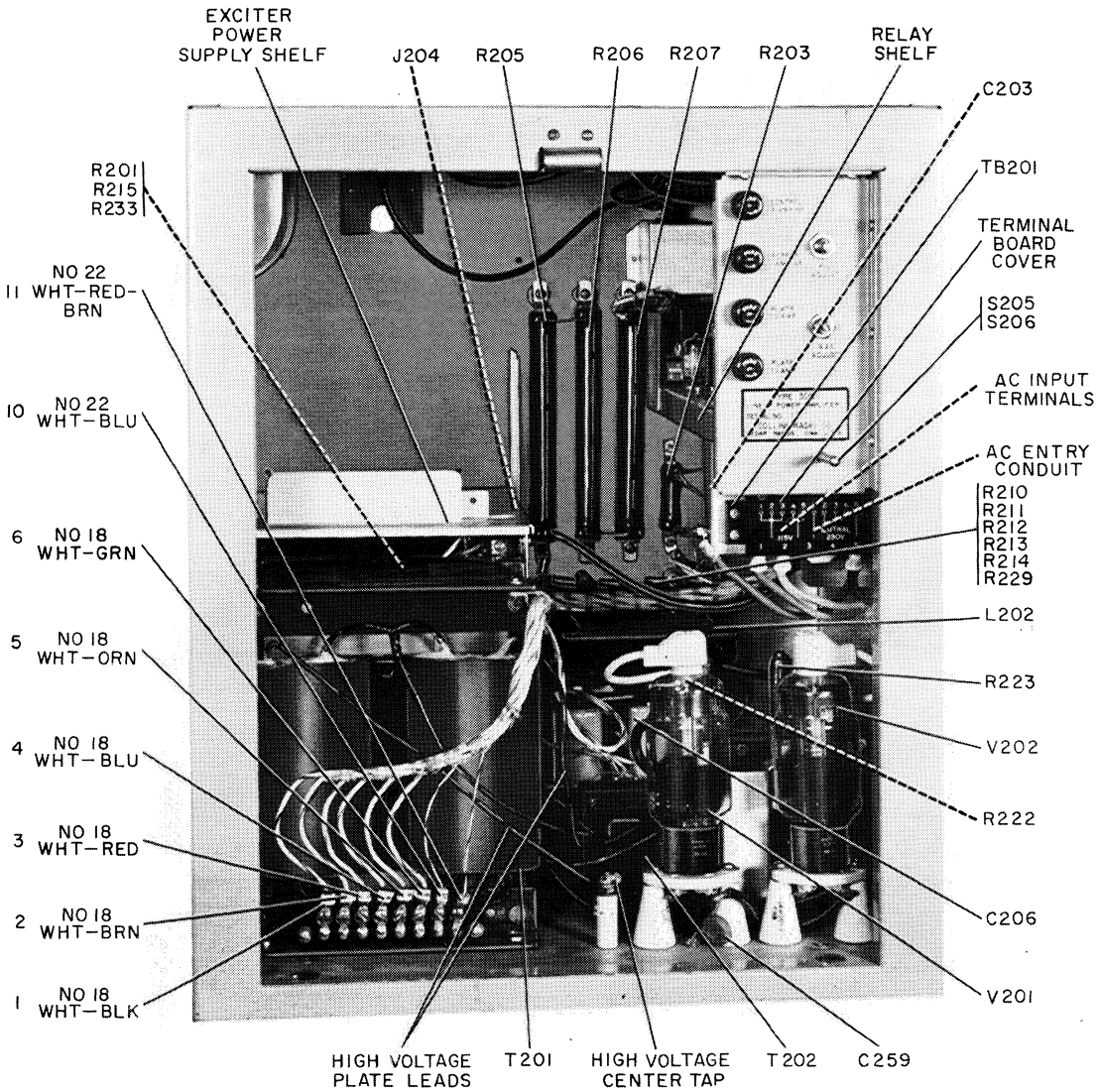

Figure 4. Power Supply Compartment, Parts Location and Wiring

t. Set exciter MIC GAIN control fully counterclockwise to produce zero drive, and set the exciter EMISSION switch to TUNE position. Idling plate current will be indicated on the 30S-1 PLATE CURRENT meter (8).

u. Remove the front cover from the power supply compartment; make a small change in setting of BIAS ADJUST; replace cover and read PLATE CURRENT meter. Repeat until the no-signal plate current is 200 ma.

v. When these adjustments are completed, press the plate OFF pushbutton (2).

3. Operation in SSB or CW Service. (Refer to figure 6.)

a. Set POWER-OFF switch (1) to POWER position.

b. Set exciter band switch to desired band and exciter meter switch to PLATE. Adjust exciter idling plate current to 50 ma. Be sure 30S-1 and exciter alc jacks are connected together. When the three-minute time delay has elapsed, press plate ON pushbutton. Set exciter meter switch to ALC. Adjust exciter ALC ZERO for exciter meter indication of zero alc. Press plate OFF pushbutton.

c. Tune and load the exciter into the antenna or dummy load, whichever is connected to RF OUTPUT jack J103 at the rear of the 30S-1. Tune and load the 32S-1 or KWM-2 according to its instruction book, EXCEPT load only to 200 ma plate current. This change in procedure for the 32S-1 or KWM-2 is necessary to realize the low system distortion for which this equipment was designed.

NOTE

Use a 100-watt dummy load (such as Collins DL-1, 52 ohms) unless antenna and feed line system present swr not exceeding 1.25 to 1.

CAUTION

Do not leave the dummy load connected to the 30S-1 output with the 30S-1 power on unless dummy load used has power dissipating capacity equal to or greater than the output power of the 30S-1.

d. Reduce exciter output to zero by reducing microphone gain to zero.

e. Press 30S-1 plate ON button, and turn 30S-1 BANDSWITCH (3) to desired band.

f. Set MULTIMETER switch (4) to TUNING & LOADING position.

g. Set SSB-CW switch (5) to desired mode of operation.

h. Disconnect dummy load and connect antenna to RF OUTPUT jack.

i. Press plate ON pushbutton (6). The pilot lamp (7) should light if the three-minute time delay has elapsed.

j. With exciter EMISSION switch in LOCK KEY position, increase exciter output by increasing microphone gain until 350-ma plate current is indicated on PLATE CURRENT meter (8).

k. Observe the MULTIMETER (9). Adjust the TUNING control (10) for MULTIMETER dip, and adjust the LOADING control (11) for MULTIMETER zero until the meter indication is zero at the dip.

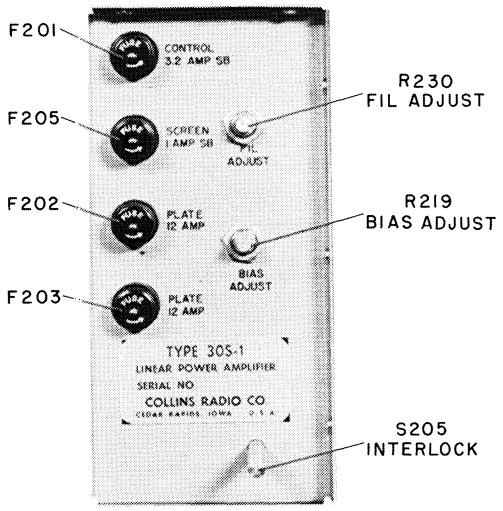

C432-06-P

Figure 5. Filament and Bias Adjustment Locations

l. Adjust exciter output (with exciter MIC GAIN control) until 30S-1 plate current is 300 ma for SSB or 400 ma for CW.

m. Redip and reload with the TUNING and LOADING controls, keeping multimeter indication at zero.

n. Recheck PLATE CURRENT meter indication for proper value as given in step l. Repeat steps l and m, as necessary, until power amplifier is loaded to 400 ma for CW or 300 ma for SSB. DO NOT switch from SSB to CW (or from CW to SSB) while operating. BE SURE 30S-1 plate voltage is off when changing setting of SSB-CW switch (5).

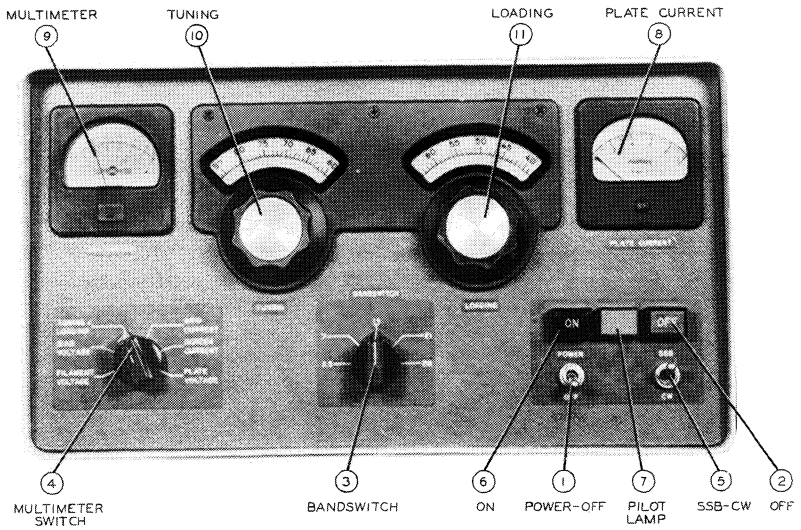

C432-05-P

Figure 6. 30S-1 R-F Linear Amplifier, Operating Controls

o. For SSB operation, set 32S-1 (or KWM-2) EMISSION switch to USB or LSB. Set exciter METER switch to ALC. Adjust MIC GAIN for meter indication of 6 db for 32S-1 (or S6 for KWM-1 or KWM-2) for peak voice readings in normal operation of the exciter. For CW operation, set EMISSION switch to CW. Station is now ready to operate.

p. Pressing the plate OFF pushbutton (2) automatically switches the exciter to the antenna for low-power operation.

CAUTION

Wait at least five seconds after pressing plate OFF button (2) before pressing plate ON button (6). This delay is necessary to allow the step-start circuit to recover.

NOTE

The cathode input circuit on the 3.5-mc band is factory tuned for minimum input vswr at 3.8 mc. The vswr will increase for operation on other parts of the band. This will cause small changes in the normal load setting of the exciter. It is possible, but not necessary, to adjust L114 for minimum vswr at a favored part of the 3.5-mc band.

q. Table 2 lists full-scale and normal meter indications for all scales of the multimeter. Full-scale indication on the PLATE CURRENT meter is 1000 ma, and normal indication on this meter is 400 ma for CW or 300 ma for SSB. According to FCC regulations, the drive power to the grounded-grid amplifier must be added to PA plate power input to determine total final amplifier plate power input. The above plate current ratings are set to keep amplifier input within legal limits.

CAUTION

If the 30S-1 is to be driven by an exciter not having automatic load control (alc), keep drive power and modulation level low to produce no grid current. Monitor PA grid current continuously while transmitting, and keep drive level at point which just produces a slight kick in grid current indication.

TABLE 2. MULTIMETER SCALE VALUES

MULTIMETER SWITCH SETTINGS	FULL-SCALE INDICATIONS	NORMAL INDICATIONS
FILAMENT VOLTAGE	10 volts a-c	6.0 volts a-c
BIAS VOLTAGE	-100 volts d-c	Voltage necessary to set idling plate current to 200 ma.
TUNING & LOADING	Not applicable	0 when 30S-1 is properly loaded.
GRID CURRENT	5.0 ma	Never more than 0.2 ma in CW, 0 in SSB
SCREEN CURRENT	50 ma	Use only for maintenance purposes.
PLATE VOLTAGE	5000 volts	2000 for CW 3000 for SSB

4. Circuit Description.

4.1 BLOCK DIAGRAM.

Figure 7 is a block diagram of the 30S-1 R-F Linear Power Amplifier. The power amplifier stage is a single, ceramic tetrode which is cathode driven. The grid is grounded for r-f by capacitor C104. The screen grid is connected directly to ground. The plate power supply, the screen grid power supply, and the control grid bias supply are connected in series. The junction between the plate power supply and the screen grid power supply is grounded through the screen current meter shunt. This arrangement places the cathode at negative potential with respect to the screen grid. The bias supply is connected between the cathode and the control grid. Provisions are included for r-f negative feedback to improve linearity and for automatic load control (alc) to prevent overdrive.

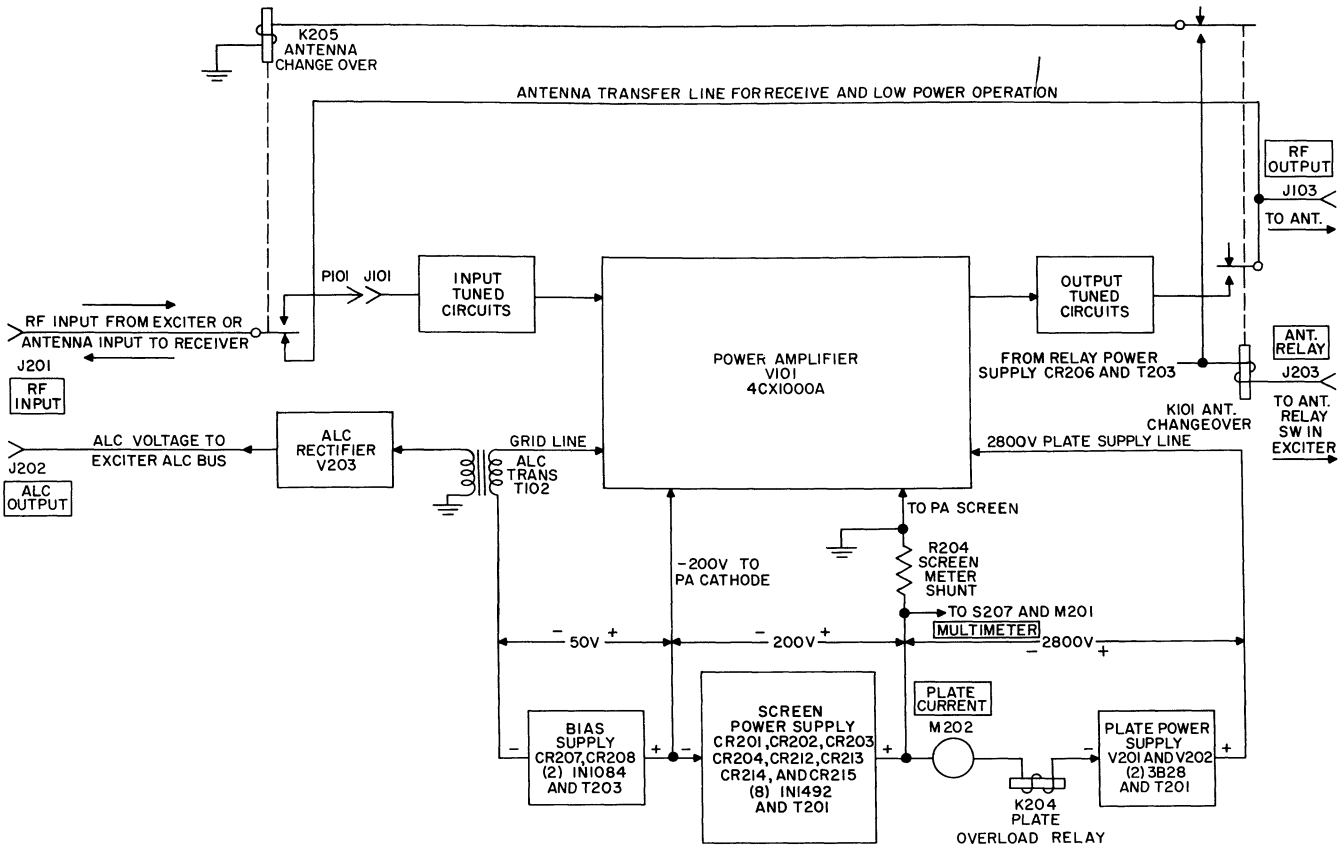

Figure 7. 30S-1, Block Diagram

4.2 INPUT CIRCUITS.

Refer to figures 7 and 15. Pi-network broad-tuned circuits and the interconnecting r-f feed line match the 50-ohm input impedance to the cathode impedance, which is approximately 100 ohms. The 20.5-foot length of cable (furnished) is necessary between the 32S-1 (or KWM-2) driver and the 30S-1 input circuits. This is due to the necessity of having an even multiple of 180-degree phase shifts between driver plate and power amplifier grid. The cable length and the 30S-1 input circuits together accomplish this. An even multiple of 180-degree phase shifts is necessary because modulation components cause a change in the resistive PA cathode impedance which is translated to a shift in reactive impedance at the driver plate. The shift in reactive impedance, at the driver plate, results in phase modulation of the driver and increases the total over-all distortion of the system. A 2.5-foot additional length of cable is furnished to bring the total interconnecting cable length to 23.0 feet for use with the KWM-1 as a driver. Drive power required for maximum legal input on SSB is 80 watts PEP.

4.3 OUTPUT CIRCUITS.

The plate circuit of the power amplifier is tuned by a pi network consisting of C120, L109, L104, C121, and C122. Capacitors C121 and C122 are ganged together and are adjustable by front panel control (LOADING) for matching the pi-network circuit to the impedance of the antenna and feed system in use. Capacitor C120 may be adjusted by the TUNING control on the front panel for resonating the tank circuit to the frequency in use. Output from the plate tank circuit is connected through the contacts of antenna changeover relay K101 to the antenna when the control circuits are switched to transmit function.

4.4 POWER SUPPLY CIRCUITS. Refer to figures 7, 8, and 15.

Three d-c power supplies and three a-c filament supplies are included in the 30S-1. The power supply may be connected to 115-volt single-phase or to a 230-volt, three-wire, single-phase source. The 230-volt, three-wire connection is recommended. High-voltage plate transformer T201 has two primary windings. These windings are connected in parallel for 115-volt operation, and in series for 230-volt operation. The 12-volt a-c filament winding of the bias supply transformer supplies current for the filament of the alc rectifier, the pilot lamps in the two meters, and the pilot lamps which light the two dials. This transformer winding also supplies current

for rectified d-c relay power. The bias winding of the transformer, T203, is connected to CR207 and CR208 in a full-wave rectifier circuit. This circuit provides grid bias voltage for the power amplifier. The heater of the 3-minute time-delay relay is supplied power from the 115-volt a-c connections which also furnish power to the high-voltage rectifier filament transformer, T202. The filament transformer, T103, supplies a-c power for the heater of the thermal over-load relay, K102. Taps on the primary of the high-voltage plate transformer, T201, are switched to provide the different voltages necessary for the power amplifier in CW or SSB operation. Power amplifier bias voltage is switched to one of two taps on the bias supply bleeder resistors for CW or SSB operation. The high-voltage plate supply rectifiers are eight, type 1N1492 silicon diodes in a full-wave bridge circuit. Each rectifier diode is paralleled with a 0.001-uf capacitor to protect it against high transient voltages.

4.5 PROTECTIVE CIRCUITS. Refer to figure 8.

4.5.1 SAFETY INTERLOCK CIRCUITS. The top cover and the power supply front door operate safety interlock switches for operator protection. When the top cover is opened, interlock switch S103 breaks the circuit to the coil of the plate contactor, K203. This removes all high voltages from the 30S-1. When the power supply compartment (lower) door is opened, interlock switch S205 breaks the same circuit and removes all high voltages. Both interlock switches are mechanically interlocked with shorting switches which short out the high-voltage filter capacitors at the same time the interlock circuit opens. The r-f compartment interlock switch, S102, is mechanically ganged with shorting switch S101, and the power supply compartment interlock switch, S205, is mechanically ganged with shorting switch S206. This arrangement protects the operator from accidentally coming in contact with approximately 3000 volts d-c which is present in either compartment.

WARNING

DO NOT BLOCK interlock switches. Voltages present in this equipment are dangerous to life. Be sure to press OFF pushbutton before opening cabinet.

4.5.2 TIME DELAY AND STEP-START CIRCUITS. When POWER-OFF switch S202 is closed, the 115-volt a-c power is applied to the heater of the 3-minute time-delay relay, K202. After the power has been applied to its heater for approximately three minutes, the bimetallic contacts close. These contacts are in series with the interlock circuits and the coil of plate contactor K202. When the ON pushbutton is depressed, K202 is energized, contacts of K202 close and apply power to the step-start relay, K201, through d-c rectifier CR205. The large electrolytic capacitor, across the coil terminals of K201, requires a fixed charging time to rise to a potential high enough to energize the relay. When this time has passed, K201 energizes and shorts out the step-start resistors. Until relay K201 has closed, all power applied to the transformer primary winding has been dropped through the two step-start resistors, R201 and R233. Thus, the high-voltage power supply starts at low primary voltage and, after the step-start cycle has elapsed, switches to full voltage. This allows time for partial charging of the large, high-voltage filter capacitors, C207 and C208, before the application of full secondary voltage to the rectifier plates. During this time, the rectifier tubes are protected from damaging high peak currents.

4.5.3 THERMAL AND OVERLOAD CIRCUITS. The thermal overload relay, K102, protects the power amplifier tube from overdissipation and loss of cooling air. Its bimetallic strip has contacts connected in series with the interlock system. The thermal overload switch is located in the air stream from V101. Current from transformer T103 is passed through the heater of K102. This current keeps K102 temperature just below that necessary to open its contacts. If the air stream fails, the temperature of the bimetallic strip increases, opening the interlock circuit, and removing voltages from the power amplifier. If overdissipation occurs in the plate of the power amplifier, the higher air temperature causes K102 to operate and break the interlock circuit.

CAUTION

Adjustment for proper operating points of K102 are made at the factory. DO NOT ALTER this adjustment, or loss of thermal protection of V101 may result.

4.5.4 POWER CONTROL CIRCUITS. Refer to figure 8. When the POWER-OFF switch is operated to POWER position, 115-volt a-c power is applied to the filament and control circuits. If the 3-minute time delay of K202 has passed, and if all interlock circuits are in proper operating condition, the plate contactor may be energized by pushing ON switch S203. When K203 contacts close, one set of them holds the electrical connection to the coil and keeps the relay closed after the ON pushbutton is released. Other contacts of K203 supply power to the antenna changeover relay circuit and to the primary winding of the high-voltage transformer, T201. Power to T201 is applied from K203 contacts through two step-start resistors. These resistors reduce the voltage applied to the transformer until capacitor C203 charges high enough that the voltage across it will energize step-start relay K201. When K201 closes, its contacts short out the step-start resistors and allow full voltage to be applied to the transformer winding.

4.6 ALC AND R-F NEGATIVE FEEDBACK CIRCUITS.

Automatic load control (alc) is a type of compressor circuit, operating at radio frequencies. The modulation envelope is detected by power amplifier grid rectification. This signal is filtered of r-f by L108 and C140 and applied through transformer T102 to the alc rectifier, V203. The audio signal is rectified by V203 to produce a negative control voltage which is a function of the modulation level. The alc rectifier, V203, is connected as a voltage doubler. The negative control voltage produced by the alc rectifier is fed back to the alc line of the exciter to produce approximately 3 db of override control. The resistor, R234, in series with V203 filament, reduces the no-signal d-c level on the alc line. This no-signal d-c level is caused by the tube contact potential. If not reduced, it might cause a delay voltage to be present on the exciter alc bus.

The 3 db of alc override control produced in the 30S-1 reduces the exciter r-f gain and keeps the drive level within tolerable limits. Automatic load control helps to keep the drive level low enough to prevent driving the power amplifier into distortion.

A fixed amount of r-f negative feedback, from the output circuit of the power amplifier to the input of the power amplifier, produces a high degree of linearity of the amplified signal. This feedback is accomplished by capacitor C103, which couples some of the plate energy back to the grid circuit. Although there is no phase inversion between the cathode and the plate circuits of a cathode-driven amplifier, there is a phase inversion between the cathode and the grid circuit, providing the grid is not bypassed completely at the r-f frequency. Therefore, the feedback voltage is out of phase with the grid voltage. Capacitors C103 and C104 form a voltage divider circuit to maintain the proper amount of feedback voltage.

4.7 TUNING & LOADING METER CIRCUIT.

One section of the SSB-CW switch, S201, selects the proper output voltage from the tuning and loading bridge circuit for the TUNING & LOADING meter indication. This circuit and the power amplifier tube form a specialized vacuum-tube voltmeter bridge circuit. It consists of V101, CR101A, and CR101B, and the associated load resistors and filter networks. The bridge is balanced when the plate circuit TUNING and LOADING controls are set to present the proper load impedance to the power amplifier plate. The meter then will read zero, and the power amplifier tube will be operating at the proper gain level for maximum efficiency and linearity.

4.8 DESCRIPTION OF CONTROLS AND INDICATORS. Refer to figure 6.

a. POWER-OFF. This switch controls application of a-c primary power to the 30S-1. When it is in OFF position, the 30S-1 is disabled. When it is in the POWER position, a-c power is applied to filament, control, and indicator circuits (except the "plate on" indicator, DS202).

b. ON. When this momentary push switch is pressed, power is applied to the coil of the plate contactor. The plate contactor is held closed by one set of its contacts.

c. OFF. This momentary push switch opens the interlock circuit and de-energizes the plate contactor.

d. BANDSWITCH. This control selects the desired operating band.

e. MULTIMETER. This control selects the desired indication of the MULTIMETER. Refer to table 2 for description of switch positions.

f. SSB-CW. This switch selects plate and bias voltages for either SSB or CW operation. It also selects the proper output from the tuning and loading bridge circuit for application to the MULTIMETER.

g. TUNING. This control adjusts the plate tuning capacitor. The dial is calibrated in a logging scale.

h. LOADING. This control adjusts pi-network loading capacitors C121 and C122. The dial is calibrated in a logging scale.

i. CALIBRATION CHART. No calibration chart is provided on the front panel nor in this instruction book. Such a chart must be derived for the conditions involved in a particular antenna and feed system. The operator may make a chart for his particular system, using the logging scales on the TUNING and LOADING controls.

5. Maintenance.

5.1 GENERAL. No special test equipment is required for adjustment of the input r-f circuits if the station includes an r-f wattmeter and directional coupler such as are included in the 312B-4 Station Control. If it is necessary to adjust the loading indication of the multimeter, required test equipment includes a 2500-watt, noninductive dummy load and a two-tone audio oscillator (1200 and 1900 cps).

CAUTION

If any replacements are made in input circuits, be sure to retain the 6.1-foot coaxial lead between S102A and L110. This critical length of cable is part of the matching network.

5.2 BLOWER LUBRICATION. Every 1000 hours of operation (approximately 6 months of normal use), lubricate the blower motor bearings with a few drops of lightweight oil. Sewing-machine oil is adequate. Do not overlubricate. Figure 13 shows the oil-hole locations.

5.3 ALIGNMENT OF R-F INPUT CIRCUITS.

5.3.1 AMATEUR BANDS.

a. Connect a directional wattmeter (such as the type used in the 312B-4 Station Control or 302C-3

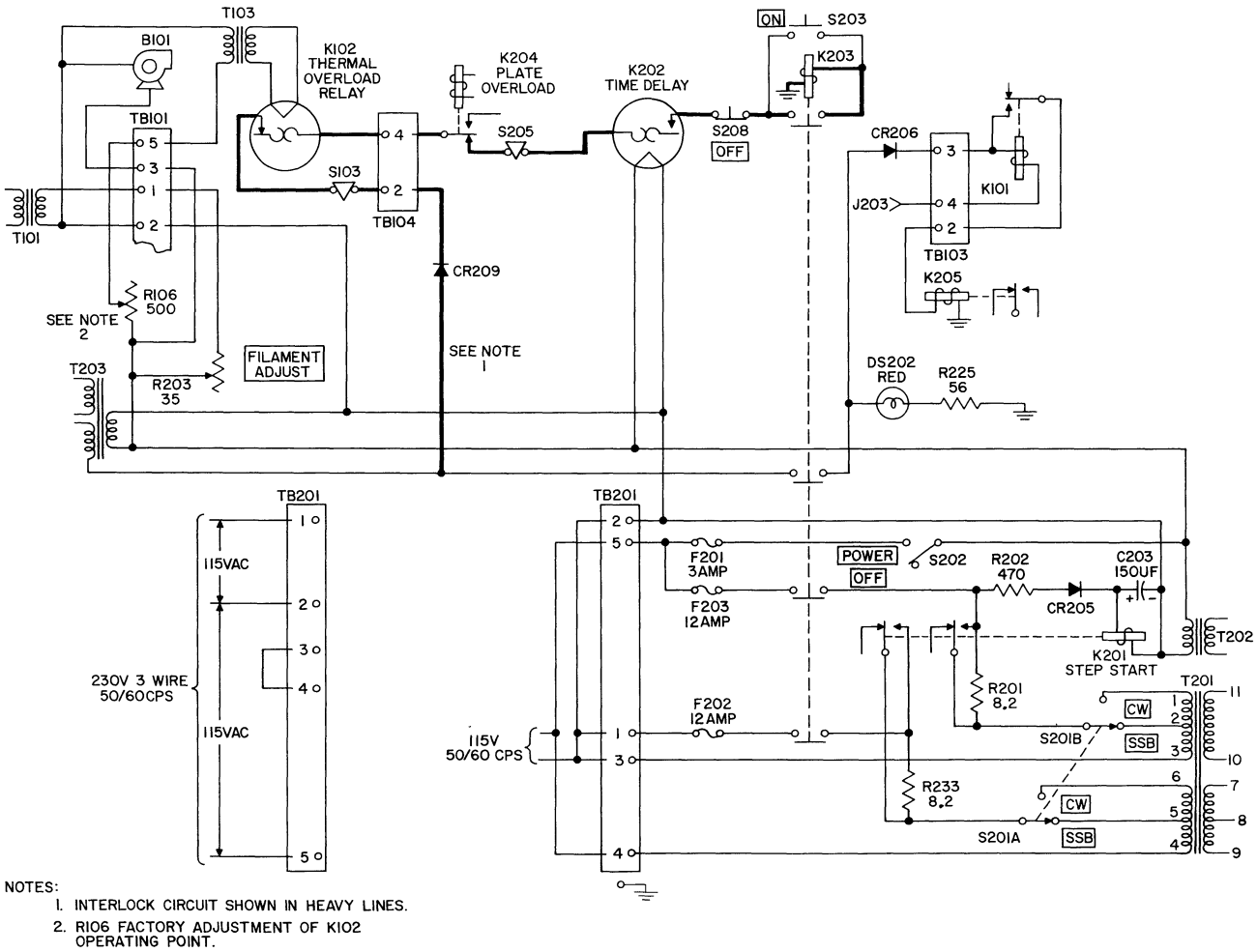

Figure 8. Control and Interlock Circuits, Simplified Schematic Diagram

Directional Coupler) between the exciter output and RF INPUT jack, J201 on the 30S-1. Connect a 2500-watt, noninductive 50-ohm dummy load to the output of the 30S-1.

b. With the 30S-1 plate power off, tune the exciter to 3.6 mc (if CW operation only is anticipated), 3.8 (if both CW and phone operation is anticipated), or 3.8 mc (if phone operation only is anticipated).

c. With the 30S-1 SSB-CW switch in the SSB position, press the ON pushbutton. Tune and load the 30S-1 into the dummy load. Retune and load the exciter output as necessary to maintain a 50 watt exciter power output.

d. While monitoring the directional wattmeter installed in step a. above, adjust L114 (accessible through one of the holes in the top cover of the r-f compartment) for minimum reflected power (not to exceed 2 watts).

e. Repeat the above procedure at 7.2, 14.3, 21.3, and 28.6 mc, adjusting L113, L112, L111, and L110 respectively. These adjustments are accessible through the holes in the top cover of the r-f compartment. Do not raise the r-f compartment cover for this procedure.

5.3.2 GENERAL COVERAGE. Use the same procedure as given in paragraph 5.3.1, except set exciter to a frequency which is in the middle of the desired band. Useful bandwidth at the new alignment frequencies is approximately the same as that for the Amateur bands. Do not attempt alignment to place the new operating bands outside the ranges given in table 3 for the BANDSWITCH positions listed. Also, do not attempt Amateur-band operation on a BANDSWITCH position when the tuned circuits for that position have been realigned for out-of-band operation.

TABLE 3
FREQUENCY COVERAGE ALLOWABLE
BY REALIGNMENT

BANDSWITCH SETTING	LOWER LIMIT	UPPER LIMIT
3.5	3.4 mc	6.0 mc
7	6.0 mc	10.0 mc
14	10.0 mc	15.0 mc
21	15.0 mc	22.0 mc
28	20.0 mc	30.0 mc

5.4 BIAS AND FILAMENT VOLTAGE ADJUSTMENT. Occasionally check the FILAMENT VOLTAGE reading on the MULTIMETER and the no-signal plate current on the PLATE CURRENT meter. If these readings are not 6.0 volts a-c and 200 ma d-c, respectively, adjust as in paragraph 2.1.

5.5 LOADING INDICATOR ADJUSTMENT. The loading indicator circuit may be checked for accuracy as follows:

a. Connect a 50-ohm, 2500 watt, noninductive dummy load to the RF OUTPUT connector J103 on the rear of the 30S-1.

b. Tune and load the 30S-1 at 14.3-mc (SSB).

c. Introduce a two-tone input signal (1200 and 1900 cps) to the exciter input. When using the KWM-2/2A or S-Line equipment this can be done as shown in figure 10, where one audio oscillator is generating a 1200-cps 1-volt rms signal and the other is generating a 1900-cps 1-volt rms signal.

d. Adjust the exciter for an USB signal of approximately 30 watts r-f output using the two tone signal for the exciter drive. When using the KWM-2/2A or S-Line equipment, this is done by positioning the METER switch to the ALC position and turning the MIC GAIN control clockwise until an indication of 6 db is indicated on the meter.

e. Set the 30S-1 multimeter switch to the SCREEN CURRENT position. Adjust the 30S-1 TUNING control to produce a peak in the screen current indication.

f. Peak the screen current indication with the TUNING control and then adjust the LOADING control until the TUNING control produces a peak screen current indication of 0 on the multimeter. During this procedure, adjust the exciter level as necessary to maintain the initial exciter output power level.

g. Set the multimeter switch to the TUNING & LOADING position. Adjust the TUNING control for a dip in the TUNING AND LOADING meter indication. If the meter indication is not 0, adjust C112 until the meter indication is zero.

h. Remove the drive to the 30S-1 (when using the KWM-2/2A or S-Line equipment merely turn the MIC GAIN control fully counterclockwise) and push the OFF pushbutton on the 30S-1. Remove the two-tone input signal. Set the 30S-1 multimeter switch to the GRID position. Increase the exciter drive level to produce a 30S-1 current indication of 0.2 ma. (when using the KWM-2/2A or S-Line equipment increase the drive by positioning the mode selector to the LOCK KEY position and then positioning the MIC GAIN control clockwise to the desired drive level).

i. Set the 30S-1 MULTIMETER switch to the TUNING AND LOADING position. Adjust the TUNING control to produce a dip in the multimeter indication. Adjust the LOADING control for a peak PLATE CURRENT meter indication. Continue adjusting the TUNING control for a multimeter dip and the LOADING CONTROL for a PLATE CURRENT meter peak until the PLATE CURRENT meter indicates 480 ma and the MULTIMETER indicates 0.

j. If the multimeter indication in step g is not satisfactory, adjust R105 until the MULTIMETER indication is 0.

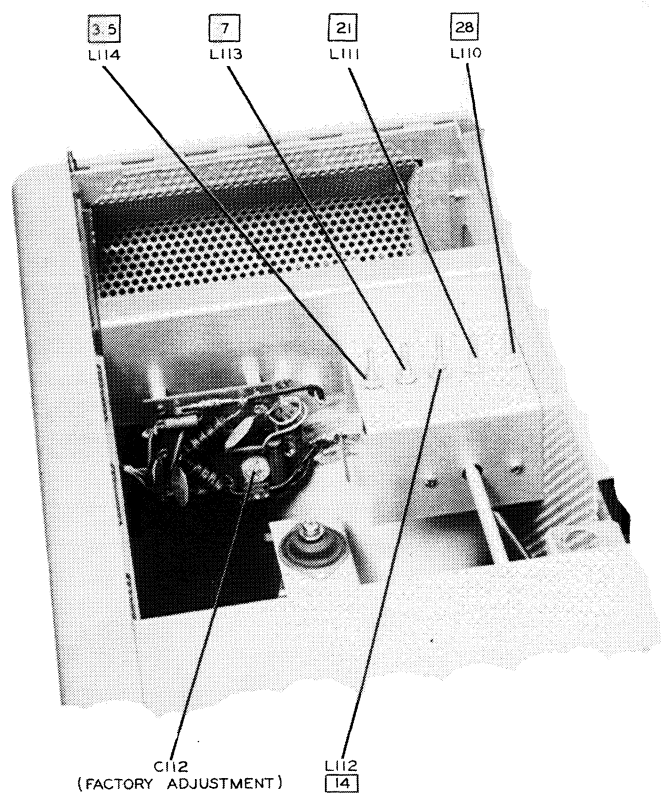

C432-04-P

Figure 9. Input Tuned Circuit Adjustment Locations

5.6 POWER OUTPUT CHECK.

a. Connect a 50-ohm, 2500 watt, noninductive, dummy to the RF OUTPUT connector J103 on the rear of the 30S-1.

b. Tune and load the 30S-1 on any frequency (CW).

c. Connect an r-f vacuum tube voltmeter across the dummy load, setting the range scale on the meter to read approximately 300 volts of r-f.

d. Tune and load the 30S-1 on any frequency (CW). The r-f vtvm across the dummy load should indicate at least 224 volts.

CAUTION

During the above procedure, do not keep the 30S-1 operating at output power levels higher than 600 watts for long periods of time. The power supply is not designed for continuous high power operation.

For SSB operation, the average voice has a peak-to-average power ratio of approximately 15 db. The alc

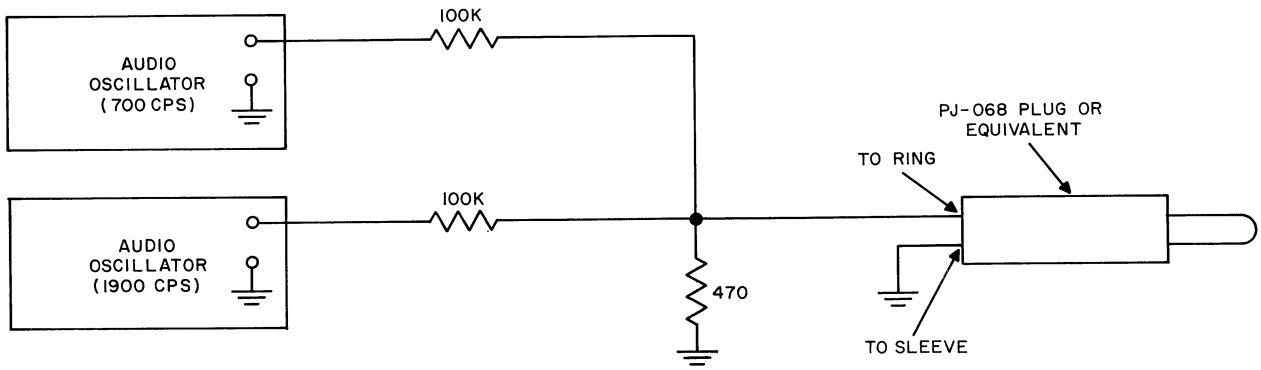

C487-47-3

Figure 10. Two Tone Test Setup

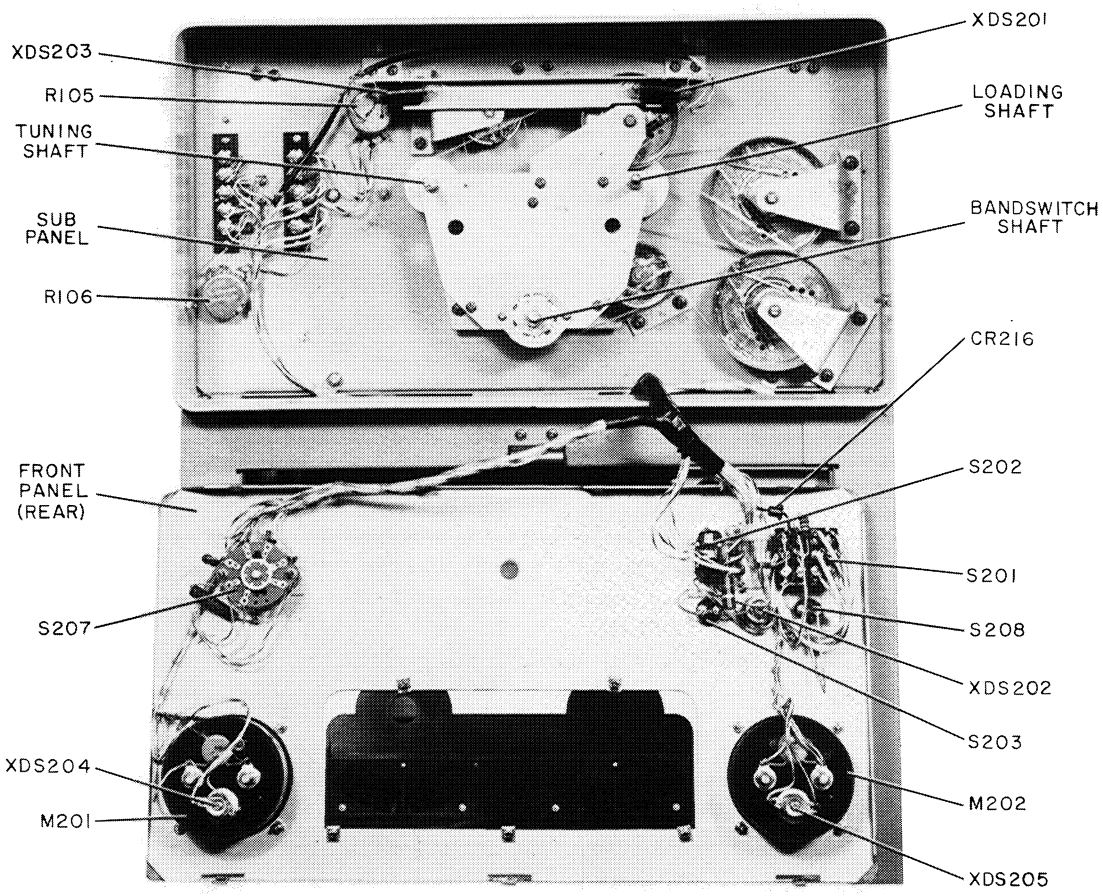

C432-16-P

Figure 11. 30S-1, Front Panel Lowered and Subpanel Exposed

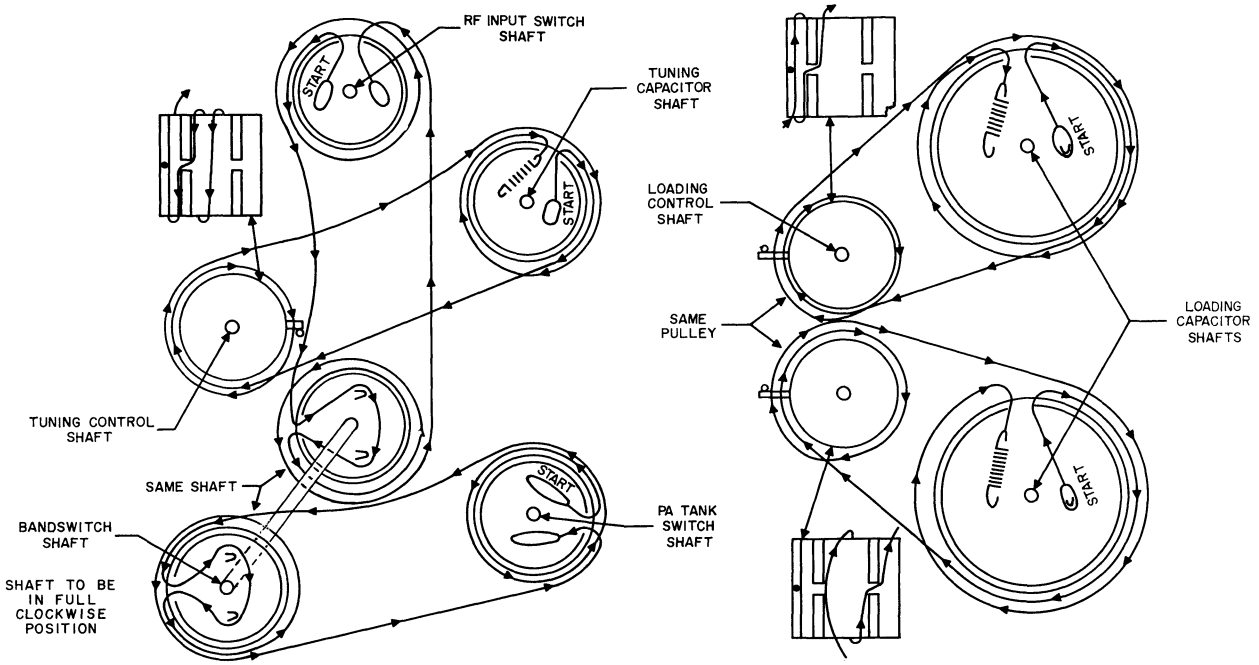

C432-07-P

Figure 12. Dial Cord Replacement Diagram

circuits of the equipment reduces this ratio to approximately 10 db for the average operator. This means that the average power read on the wattmeter is about 10 percent of the peak power output. If the operators voice is low pitched, the average power indicated on the wattmeter will be higher. However, since the alc circuits of the equipment are designed to begin reduction of the drive power when the amplifier reaches 2-kw plate power input, any indication of alc voltage means that the 30S-1 is operating at its optimum power output level.

5.7 DIAL CORD REPLACEMENT. Refer to figures 11 and 12. Remove all control knobs. Remove the flathead screws securing the front panel to the cabinet. These screws are arranged across the top front and bottom front edges of the cabinet. The power supply front cover must be removed to gain access to the bottom screws. Do not loosen the screws at the sides of the cabinet. Remove the front panel from the cabinet, exposing subpanel and dial drive assemblies. Remove the broken or defective dial cord, and replace with proper length of the new cord from Collins part number 432-1009-00. When ordering dial cord, be sure to state desired length in feet. If possible, measure the required length of the new cord to be cut by the length of the old cord removed. Note that switch drive cords are not under spring tension. These cords are pulled and tied tight in order to bring switches into positive detent. Replace front panel and knobs. If switches are not aligned to same relative positions after the dial cord replacement, loosen the shaft couplers and align switches and knobs for proper positions. Retighten couplers.

5.8 PA TUBE REPLACEMENT. If it is necessary to replace the power amplifier tube, V101, proceed carefully as follows:

a. Move K102 aside so it will not interfere in tube removal or replacement.

b. Loosen the clamp around the tube plate cooling fins. Do not move the tube clamp out of position.

c. Grasp the tube by the plate cooling fins, and gently rotate 1/3 turn counterclockwise. Pull the tube straight out from its socket. Do not force at any time, but feel for binding or interference as the tube is withdrawn from the socket. Inspect the connector tabs inside the socket to make sure they are not deformed in tube removal.

d. Remove the new tube from its carton. Inspect it to be certain that the tube base contacts have not been damaged in shipping. These contacts are the thin metal tabs which extend radially from the ceramic lower portion of the tube.

e. Insert the tube GENTLY into its socket, making sure the tube base contacts are not jammed nor bent in the process. In order to do this, start the socket key into the keyway inside the tube and lower the

tube gently, feeling for any binding between socket key and tube keyway. If binding occurs, withdraw the tube, rotate 1/3 turn and try again. In two of the three possible positions, the tube may bind in entering the socket. This is due to the fact that the tube keyway and the socket key are slightly off center. Find the orientation which does not bind, and insert the tube all the way into the socket so that the bottom portion of the tube plate cooling fins is inside the black cooling chimney.

f. Check that the top of the tube plate cooling fins is approximately 7/8 inch above the top edge of the black cooling chimney. Turn the tube clockwise (viewed from 30S-1 rear) against the stop to tighten the tube base contacts under the socket contacts. DO NOT FORCE.

CAUTION

If an attempt is made to tighten the tube into its contacts when the tube is not properly bottomed in its socket, both tube and socket may be damaged. The manufacturer assumes no responsibility for tubes or sockets damaged by improper handling or installation.

g. Tighten the clamp around the tube plate cooling fins. This makes electrical connection to the plate of the tube.

h. Place the thermal relay, K102, where it will be in the air stream flowing through the cooling fins of the tube.

CAUTION

Be sure that K102 does not touch the top of the tube. This would cause a damaging short circuit.

Refer to figure 13 which shows the power amplifier tube properly installed and the proper operating position of K102. Inspect the r-f compartment to be sure there are no short circuits, and close the top cover.

5.9 PILOT LAMP REPLACEMENT. The "plate on" indicator lamp may be replaced without removing the front panel. The red and black jewel which covers this lamp snaps onto the panel. It is shown in figure 6 as the PILOT LAMP (7). Grasp the jewel and snap it off. Replace the DS202 bulb and snap the jewel back in place. The meter and dial lamps may be replaced by removing the front panel. To replace these lamps, proceed as follows:

a. Remove all control knobs. Remove the power supply front cover.

b. Remove the flathead screws securing the front panel to the cabinet.

NOTE

Do not loosen any screws at the sides of the cabinet. The front panel is secured only by screws along the top and bottom edges.

c. Pull the front panel out and allow it to hang by its cable. Refer to figure 11.

d. To replace the dial lamps, slip their clip-on sockets off the ends of the bracket which is mounted above the dials. Replace the dial lamps and slip the clip-on sockets back on the bracket. Refer to figure 11.

e. To replace a meter lamp, pull the socket straight out from the meter case. Replace the lamp in the socket and snap the socket back into the hole in the meter case.

6. Specifications.

Size . . . . . 30-5/8 in. high, 17 in. wide, 18-3/4 in. deep (over-all dimensions).

Weight . . . . . 160 pounds.

Frequency range . . . . . 3.5 mc - 29.7 mc, covering all amateur bands. By retuning input coils as necessary, the following general coverage bands may be covered:

Frequency Band	Total Coverage
3.5 mc	3.5 - 6.0 mc
7.0 mc	6.0 - 10.0 mc
14.0 mc	10.0 - 15.0 mc
21.0 mc	15.0 - 22.0 mc
28.0 mc	22.0 - 30.0 mc

Mode . . . . . SSB or CW

Type of service . . . . . Intermittent commercial or amateur

Plate power input	CW - 1000 watts input SSB - Nominal average input of 1000 watts with speech. Distortion products at this level are at least 35 db down from signal.
Drive power requirements	SSB - 80 watts PEP. CW - 60 watts.
Primary power requirements	230 volts a-c, 3-wire, single-phase, at 15 amperes or 115 volts a-c at 30 amperes.
Input impedance	52 ohms.
Output impedance	52 ohms unbalanced with swr not to exceed 2 to 1.
Noise level	40 db down from output signal with 1-kw single-tone input.
Harmonic output	All harmonics at least 45 db down from output signal.
Vacuum tubes	PA - 4CX1000A (1) Rectifiers - 3B28 (2) Alc rectifier - 12AL5 (1)

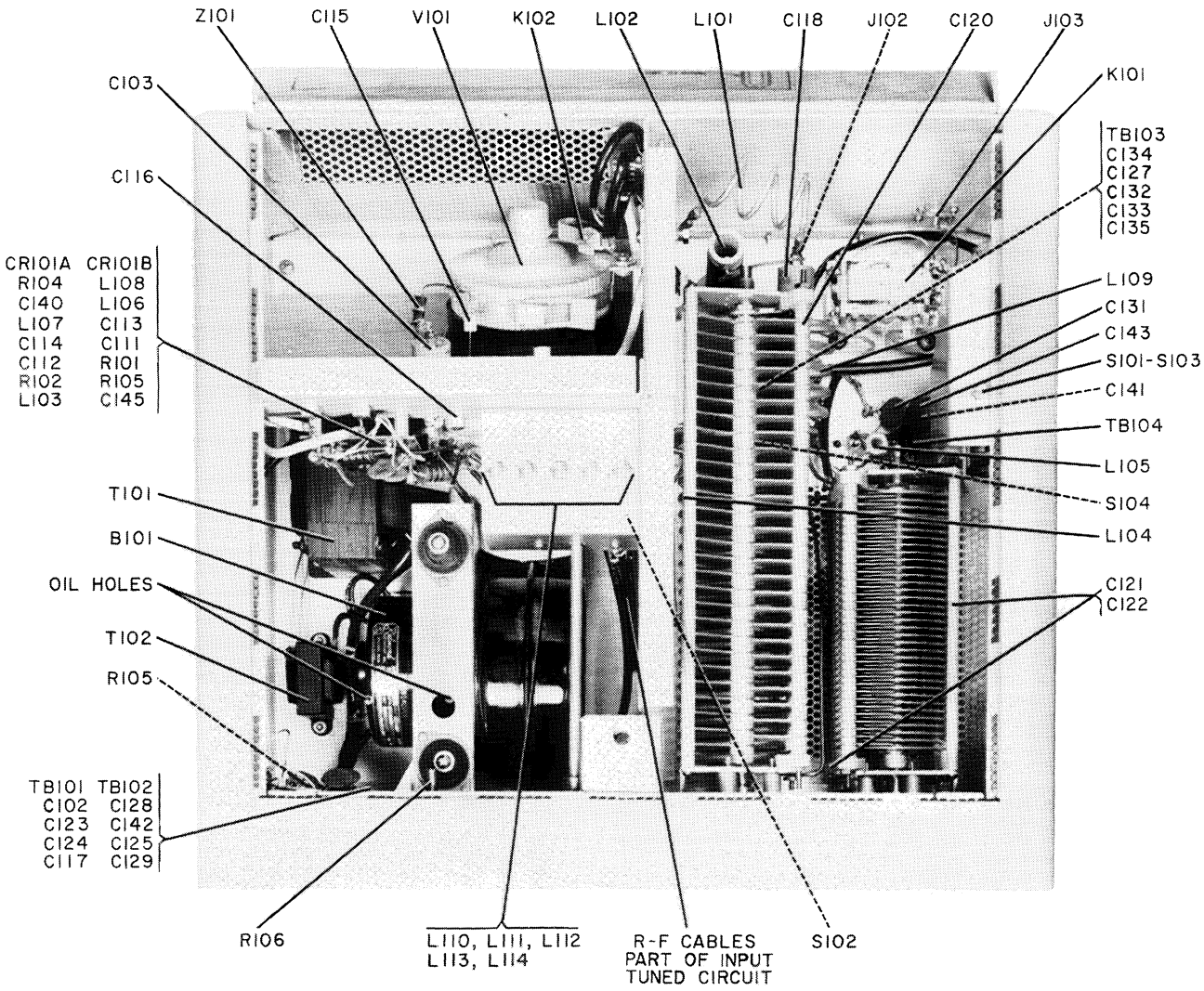

C432-09-P

Figure 13. Power Amplifier Compartment, Parts Location

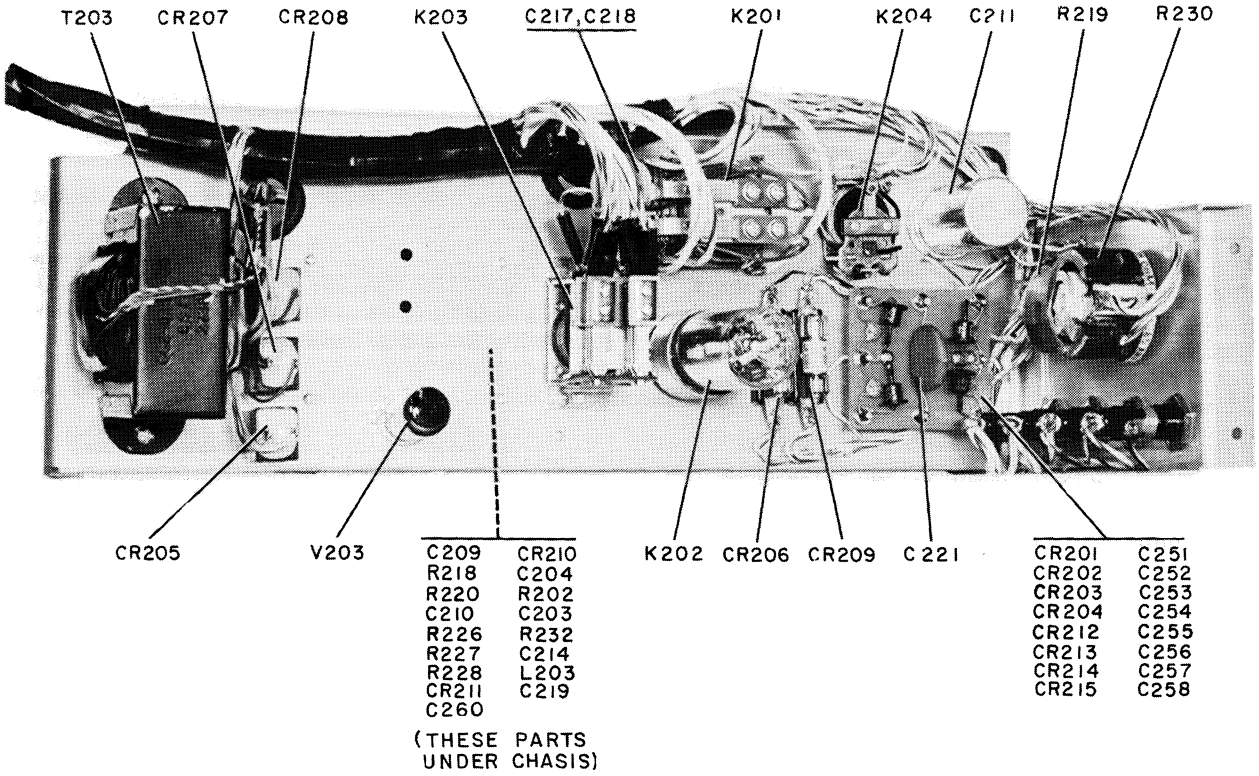

Figure 14. Relay Shelf in Power Compartment, Parts Location

C432-10-P

7. Parts List.

Figures 3, 9, 11, 13 and 14 show parts identification of the 30S-1. Following is a parts list for the 30S-1.

ITEM	DESCRIPTION	COLLINS PART NUMBER
	30S-1 POWER AMPLIFIER	522-1286-00
	UPPER CABINET	544-6873-00
B101	BLOWER: direct connected; 115 v ac, 60 cps, single phase, 0.30 amp, 1550 rpm; Redmond Co., Inc. part no. L-30122	009-1407-00
C101	NOT USED	
C102	CAPACITOR, FIXED, CERAMIC: 10,000 uuf ±20%, 500 v dc; Sprague Electric Co. of Wisconsin	913-3013-00
C103	CAPACITOR, FIXED, CERAMIC: 5 uuf ±5%, 5000 vdcw; Centralab Division of Globe Union, Inc. part no. 850S5ZPORM5PCT	913-0840-00
C104	CAPACITOR, FIXED, CERAMIC: 220 uuf ±5%, 1000 vdc; Centralab	913-3538-00
C105	CAPACITOR, FIXED, CERAMIC: same as C102	913-3013-00
C106	NOT USED	
C107	CAPACITOR, FIXED, CERAMIC: 91 uuf ±5%, 1000 vdc; Centralab	913-3579-00
C108	CAPACITOR, FIXED, CERAMIC: 110 uuf ±5%, 1000 vdc; Centralab	913-3572-00
C109	CAPACITOR, FIXED, CERAMIC: 510 uuf ±5%, 1000 vdc; Centralab	913-3585-00
C110	CAPACITOR, FIXED, CERAMIC: 820 uuf ±5%, 1000 vdc; Centralab	913-3586-00
C111	CAPACITOR, FIXED, MICA: 5 uuf ±10%, 500 v dc; Electro Motive Mfg. Co. part no. DM15C050K-500WV	912-2751-00

ITEM	DESCRIPTION	COLLINS PART NUMBER
C112	CAPACITOR, VARIABLE, CERAMIC: rotary type, 1 section, 8 to 75 uuf, 350 v dc; Erie Resistor Corp. part no. 557018 U2PD 34R	917-1075-00
C113	CAPACITOR, FIXED, CERAMIC: same as C102	913-3013-00
C114	CAPACITOR, FIXED, CERAMIC: same as C102	913-3013-00
C115	CAPACITOR, FIXED, CERAMIC: 1 uuf ±25%, 5000 v dc; Centralab type DA855	913-3703-00
C116	CAPACITOR, FIXED, CERAMIC: 150 uuf ±10%, 500 vdc; Centralab type 721	914-3705-00
C117	CAPACITOR, FIXED, CERAMIC: same as C102	913-3013-00
C118	CAPACITOR, FIXED, CERAMIC: 1000 uf ±20%, 5000 v dc; Centralab Division of Globe Union, Inc. part no. DA858-003	913-0101-00
C119	NOT USED	
C120	CAPACITOR, VARIABLE, AIR: plate meshing type; 32 uuf min. to 241 uuf max; E.F. Johnson part no. 154-16	920-0137-00
C121	CAPACITOR, VARIABLE, AIR: plate meshing type; 29 uuf min. to 700 uuf max.; E.F. Johnson part no. 154-32	920-0140-00
C122	CAPACITOR, VARIABLE, AIR: same as C121	920-0140-00
C123	CAPACITOR, FIXED, CERAMIC: same as C102	913-3013-00
C124	CAPACITOR, FIXED, CERAMIC: same as C102	913-3013-00
C125	CAPACITOR, FIXED, CERAMIC: same as C102	913-3013-00
C126	NOT USED	
C127	CAPACITOR, FIXED, CERAMIC: 0.0015 uf ±20%, 6000 v dc; Centralab type DD60	913-3539-00
C128 thru C133	CAPACITOR, FIXED, CERAMIC: same as C102	913-3013-00
C134	CAPACITOR, FIXED, MICA: 33 uuf, ±10%, 500 v dc; Electro Motive p/n DM15F330K01	912-2781-00

ITEM	DESCRIPTION	COLLINS PART NUMBER
C135	CAPACITOR, FIXED, CERAMIC: same as C102	913-3013-00
C136	NOT USED	
C137	CAPACITOR, FIXED, CERAMIC: same as C107	913-3579-00
C138	CAPACITOR, FIXED, CERAMIC: 180 uuf ±5%, 1000 vdc; Centralab	913-3581-00
C139	CAPACITOR, FIXED, CERAMIC: 220 uuf ±5%, 1000 vdc; Centralab	913-3582-00
C140	CAPACITOR, FIXED, CERAMIC: same as C102	913-3013-00
C141	CAPACITOR, FIXED, CERAMIC: same as C102	913-3013-00
C142	CAPACITOR, FIXED, CERAMIC: same as C102	913-3013-00
C143	CAPACITOR, FIXED, CERAMIC: same as C127	913-3539-00
C144	CAPACITOR, FIXED, CERAMIC: same as C102	913-3013-00
C145	CAPACITOR, FIXED, CERAMIC: same as C102	913-3013-00
C146	CAPACITOR, FIXED, CERAMIC: 1000 uuf -20% +80%, 500 v dc; Erie Resistor Corp. part no. 327047 X5T0 102Z	913-1292-00
C147	CAPACITOR, FIXED, CERAMIC: 650 uuf ±5%, 1000 v dc; Centralab Division of Globe Union, Inc. part no. DA135-022CB	913-3588-00
C148	CAPACITOR, FIXED, CERAMIC: 1000 uuf ±5%, 1000 v dc; Centralab Division of Globe Union, Inc. part no. DA136-024CB	913-3587-00
C149	CAPACITOR, FIXED, CERAMIC: same as C146	913-1292-00
C150	CAPACITOR, FIXED, CERAMIC: 560 uuf ±5%, 1000 vdc; Centralab Division of Globe Union, Inc. part no. DA136-019CB	913-3589-00
C151	CAPACITOR, FIXED, CERAMIC: same as C150	913-3589-00
CR101A	SEMICONDUCTOR DEVICE SET: matched pair of 1N547 diodes	544-6886-00
CR101B	SEMICONDUCTOR DEVICE SET: same as CR101A	544-6886-00
J101	JACK, TIP: accomodates 1/8 in. plug; ceramic insulation; brass contacts; Howard B. Jones Division of Cinch Mfg. Corp. part no. 201-11-01-018	360-0088-00
J102	JACK, TIP: same as J101	360-0088-00
J103	CONNECTOR, RECEPTACLE, ELECTRICAL: 1 rd female contact; 1 mating end; 30 ohms; Communication Electronic Nomenclature Subpanel part no. UG-58A/U	357-9003-00
K101	RELAY, ARMATURE: 2C, 10 amps, 115 v ac or 26.5 vdc; 55 ohms coil; Elgin National Watch Co. part no. AH1000	970-1922-00
K102	SWITCH, THERMAL: bimetal element	545-3120-004
L101	COIL, RADIO FREQUENCY: silver plated copper wire 1/8 in. dia.; 3 turns, 15/16 in. id.; 2 in. lg. approx	544-6950-002
L102	COIL, RADIO FREQUENCY: 159 turns, single layer wound no. 27 AWG wire	540-7979-00
L103	COIL, RADIO FREQUENCY: single layer wound solenoid, 56 uh inductance, 870 ma cur; 1.30 ohms; Jeffers Electronics Division of Speer Carbon Co. part no. 10404-30	240-0191-00
L104	COIL, RADIO FREQUENCY: silver plated copper tubing 3/16 in. dia.; 23 turns, 2 1/2 in. id	544-6915-002
L105	COIL, RADIO FREQUENCY: single layer wound; 44 uh 600 ma; 7 mc to 35 mc; Parker Kalon Division of General American Transportation Corp. part no. 49966	240-0137-00
L106	COIL, RADIO FREQUENCY: universal wound; 2 mh inductance, 100 ma cur; 50,000 ohms, National Coil Co. part no. C-0047409	240-0134-00
L107	COIL, RADIO FREQUENCY: same as L106	240-0134-00
L108	COIL, RADIO FREQUENCY: same as L106	240-0134-00
L109	COIL, RADIO FREQUENCY: silver plated copper tubing 3/16 in. dia; 5 turns, approx 2 1/8 in. lg	544-6900-002
L110	COIL, RADIO FREQUENCY: 5 turns, single layer wound no. 20 stranded formvar 0.28-0.45 uh	544-6999-003
L111	COIL, RADIO FREQUENCY: 6 turns, single layer wound, no. 20 stranded formvar 0.7-1.1 uh	544-6998-003
L112	COIL, RADIO FREQUENCY: 10 turns, single layer wound, no. 20 stranded formvar 0.7-1.1 uh	544-7002-003
L113	COIL, RADIO FREQUENCY: 13 turns, single layer wound, no. 20 stranded formvar, 1.1-1.7 uh	544-7001-003
L114	COIL, RADIO FREQUENCY: 19 turns, single layer wound, no. 22 stranded formvar, 1.9-3.1 uh	544-7000-003
L115	COIL, RADIO FREQUENCY: 11 turns of #20 AWG, 1.8 mh ±5%	545-7814-00
L116	COIL: p/o Z101	
MP101	PULLEY: steel, 1 "U" shaped groove, 1.625 in. od; brass hub 1/4 in. id	544-6949-002
MP102	DRUM, LOADING, PRESSED: aluminum; 0.250 in. id by 1 5/8 in. od by 1 in. lg; incls 1 pin spring 1/2 in. lg	544-6962-002
MP103	DRUM TUNING, PRESSED: aluminum, 0.250 in. id, 1 3/8 in. od, 7/8 in. lg, incl 1 pin spring 1/2 in. lg	544-6964-002

ITEM	DESCRIPTION	COLLINS PART NUMBER
MP104	PULLEY: steel, 1 "U" shape groove; 1.625 in. od; 1 brass hub, 0.188 in. id	544-6899-002
MP105	PULLEY: steel, 1 "U" shape groove; 0.375 in. id by 2.125 in. od by 1/4 in. thk; Gray Stamping and Mfg. Co. part no. SP3-22	281-0054-00
MP106	PULLEY: steel, 1 "U" shape groove; 0.375 in. id, by 3 in. od by 11/32 in. thk; Gray Stamping and Mfg. Co. part no. SP4-28	281-0019-00
MP107	PULLEY: same as MP106	281-0019-00
MP108	PULLEY: same as MP101	544-6949-002
P101	PLUG, TIP: small banana contact element; plastic insulation; non precious metal contact; 1.250 in. lg o/a; Switchcraft, Inc. part no. 3501MC	361-0062-00
P102	PLUG, TIP: same as P101	361-0062-00
R101	RESISTOR, FIXED, FILM: 38,300 ohms ±1%, 1/4 w; IRC type MDB	705-7172-00
R102	RESISTOR, FIXED, FILM: same as R101	705-7172-00
R103	RESISTOR, FIXED, COMPOSITION: 22 ohms ±10%, 1 w; Allen Bradley type GB	745-3282-00
R104	RESISTOR, FIXED, COMPOSITION: 1000 ohms ±10%, 1 w; Allen Bradley type GB	745-3352-00
R105	RESISTOR, VARIABLE: 0.10 megohms ±20%, 1/2 w; Stancor Electronics, Inc.	376-3275-00
R106	RESISTOR, VARIABLE, WIREWOUND: 500 ohms ±10%, 2 w; Chicago Telephone Supply Corp.	750-0510-00
S101	INTERLOCK ASSEMBLY UPPER: c/o the following	544-6879-00
	SPRING, HELICAL COMPRESSION: cres wire, 1 5/8 in. free length	544-6922-002
	SHAFT: cres, 1/4 in. dia by 4 1/16 in. lg	544-6924-002
	DISC, SHORTING: brass, 1/16 in. thk, 0.406 in. id, 3/4 in. radius	544-6925-002
	INSULATOR, SWITCH: phenolic, 0.255 in. id, 3/4 in. radius, 3/16 in. thk	544-6926-002
	COLLAR: aluminum, setscrew type, 0.250 in. id, 1/2 in. od	544-6967-002
	BRACKET: aluminum, 0.064 in. thk, 1 1/4 in. by 2 3/16 in. by 4 in., three clinch nuts 4-40 pressed into bracket	544-6990-003
S102	SWITCH SECTION, ROTARY: 1 moving contact, 7 fixed contacts, 1 pole, phenolic insulation; Oak Mfg. Co. part no. 94111AH	269-2036-00
S103	SWITCH, PUSH: spst, solder lug, tinned, 125 vac at 0.75 amp, 250 v ac at 0.25 amps; 0.312 in. by 0.675 in. by 1.956 in.; Cutler Hammer, Inc. part no. 8411K4	260-2548-00
S104	SWITCH, ROTARY: 1 moving contact, 1 pole, 4 fixed contacts	545-7825-003
T101	TRANSFORMER, POWER, STEP-DOWN: open frame, primary winding 105 v, 50/60 cps, secondary winding, 6 v, 12.5 A wire leads; Stancor Electronics, Inc.	662-0354-00
T102	TRANSFORMER, AUDIO FREQUENCY: pri. 10,000 ohms, 0 amp; sec. 10,000 ohms, 0 amp; Stancor Electronics Inc. part no. 27658	667-0344-00
T103	TRANSFORMER, POWER, STEP-DOWN: primary winding 0.5 v; 50 to 60 cps, 7 amps; Stancor Electronics, Inc. part no. 28618	662-0427-00
TB101	TERMINAL BOARD: bakelite; 1/16 in. thk, 5/8 in. w, 3 in. lg; 5 screw-type terminals; Cinch Mfg. Corp. part no. 1775	306-0035-00
TB102	TERMINAL BOARD: same as TB101	306-0035-00
TB103	TERMINAL STRIP: bakelite; 1/16 in. thk., 5/8 in. w, 2-9/16 in. lg; 4 terminals; Cinch Mfg. Corp. part no. 1774	306-0034-00
TB104	TERMINAL STRIP: same as TB103	306-0034-00
TB105	TERMINAL BOARD: plastic; 1/16 in. by 2 5/16 in. by 2 5/16 in.	544-6970-002
V101	ELECTRON TUBE: tetrode; Eimac type 4CX1000A; Eitel-McCullough, Inc. part no. 4CX1000A	256-0123-00
XV101	SOCKET, ELECTRON TUBE: use with tube type 4CX1000A; Eimco Corp. part no. Y-131	220-1341-00
Z101	SUPPRESSOR, PARASITIC: 2 turns of no. 20 AWG wire inductance, 22 ohms resistance, 1 w, incl L116	544-6876-00
	DIAL CABLE: plastic covered; c/o 0.012 in. dia, 7 strand stainless steel cable, coated w/ nylon to 0.032 in. dia; Berkley Fly Co. part no. N0N5	432-1009-00
	LOWER CABINET	544-6874-00
C201	CAPACITOR, FIXED, CERAMIC: 10,000 uuf ±20%, 500 v dc; Sprague Electric Co. of Wisconsin	913-3013-00

ITEM	DESCRIPTION	COLLINS PART NUMBER
C202	CAPACITOR, FIXED, CERAMIC: same as C201	913-3013-00
C203	CAPACITOR, FIXED, ELECTROLYTIC: 150 uf -10% +100%, 150 v dc; Sprague Electric Co. part no. D29075	183-1560-00
C204	CAPACITOR, FIXED, ELECTROLYTIC: 40 uf -10% +100%, 350 v dc; Sprague Electric Co. part no. D29076	183-1559-00
C205	CAPACITOR, FIXED, PAPER: 0.5 uf ±10%, 1500 v dc	541-5657-00
C206	CAPACITOR, FIXED, PAPER: 0.15 uf ±10%, 5,000 v dc; Cornell-Dubilier	930-0035-00
C207	CAPACITOR, FIXED, PAPER: 4 uf ±20%, 3000 v dc; Cornell-Dubilier	930-4314-00
C208	CAPACITOR, FIXED, PAPER: same as C207	930-4314-00
C209	CAPACITOR, FIXED, ELECTROLYTIC: 50 uf -10% +100%, 150 v dc; P.R. Mallory no. TC49	183-1045-00
C210	CAPACITOR, FIXED, ELECTROLYTIC: same as C209	183-1045-00
C211	CAPACITOR, FIXED, ELECTROLYTIC: 2 sections, 250 uf -10% +100%, 2 sections, 25 v dc; Sprague Electric Co. part no. D29668	183-1480-00
C212 thru C218	CAPACITOR, FIXED, CERAMIC: same as C201	913-3013-00
C219	CAPACITOR, FIXED, PAPER: 0.1 uf ±10%, 400 v dc; Sprague Electric Co. part no. 160P10494	931-0299-00
C220	NOT USED	
C221	CAPACITOR, FIXED, CERAMIC: 0.01 uf -0% +100% at room temperature; 1600 v dcw; Centralab Division of Globe Union, Inc. part no. DD16-103	913-3522-00
C222 thru C250	NOT USED	
C251	CAPACITOR, FIXED, CERAMIC: 0.001 uf ±20%, 1000 v dc; Centralab Division of Globe Union Inc. part no. DA150-001CB	913-3742-00
C252 thru C258	CAPACITOR, FIXED, CERAMIC: same as C251	913-3742-00
C259	CAPACITOR, FIXED, CERAMIC: 0.0015 uf ±20%, 6000 v dc; Centralab type DD60	913-3539-00
C260	CAPACITOR, FIXED, ELECTROLYTIC: 2000 uf -10% +100%, 6 v dc; Sprague type DEE	183-1311-00
CR201	SEMICONDUCTOR DEVICE, DIODE: silicon; hermetically sealed; General Electric part no. 1N1492	353-1661-00
CR202	SEMICONDUCTOR DEVICE, DIODE: same as CR201	353-1661-00
CR203	SEMICONDUCTOR DEVICE, DIODE: same as CR201	353-1661-00
CR204	SEMICONDUCTOR DEVICE, DIODE: same as CR201	353-1661-00
CR205	RECTIFIER, METALLIC: selenium, 130 v ac input voltage, 50 ma dc; Sarkes-Tarzian, Inc. Model 50	353-0153-00
CR206	SEMICONDUCTOR DEVICE, DIODE: silicon; Sarkes, Tarzian, Inc. part no. 40M(M500)	353-1567-00
CR207	RECITIFER, METALLIC: same as CR205	353-0153-00
CR208	RECTIFIER, METALLIC: same as CR205	353-0153-00
CR209	SEMICONDUCTOR DEVICE, DIODE: same as CR206	353-1567-00
CR210	SEMICONDUCTOR DEVICE, DIODE: silicon; Hughes Products part no. 1N457	353-0204-00
CR211	SEMICONDUCTOR DEVICE, DIODE: same as CR210	353-0204-00
CR212	SEMICONDUCTOR DEVICE, DIODE: same as CR201	353-1661-00
CR213	SEMICONDUCTOR DEVICE, DIODE: same as CR201	353-1661-00
CR214	SEMICONDUCTOR DEVICE, DIODE: same as CR201	353-1661-00
CR215	SEMICONDUCTOR DEVICE, DIODE: same as CR201	353-1661-00
CR216	SEMICONDUCTOR DEVICE, DIODE: same as CR201	353-1661-00
DS201	LAMP, INCANDESCENT: 6.3 v, 0.150 amp design current, miniature bayonet base; T-3-1/4 clear bulb; 1.87 in. max lg o/a; General Electric type 47	262-3240-00
DS202	LAMP, INCANDESCENT: same as DS201	262-3240-00
DS203	LAMP, INCANDESCENT: same as DS201	262-3240-00
F201	FUSE, CARTRIDGE: 3.2 amps, 125 v dc; ferrule terminal; Bussmann Fuse Division of McGraw-Edison Co. part no. MDX-3 2/10	264-0216-00
F202	FUSE, CARTRIDGE: 250 v, 12 amps, ferrule terminals; Bussmann Fuse Division of McGraw-Edison Co. part no. ABC12	264-0397-00

ITEM	DESCRIPTION	COLLINS PART NUMBER
F203	FUSE, CARTRIDGE: same as F202	264-0397-00
F204	FUSE, CARTRIDGE: 8 amps, 250 v dc; ferrule terminal; Bussmann Fuse Division of McGraw-Edison Co. part no. ABC8	264-0395-00
F205	FUSE, CARTRIDGE: 1 amp current rating, 250 v dc; ferrule terminals; glass enclosed; Bussmann Fuse type MDL & 3AG S/B	264-4280-00
H201	WASHER, FLAT: stainless steel, cadmium plated finish, 0.060 in. by 0.136 in. by 0.250 in.	504-0717-003
H202	NUT, PLAIN, KNURLED: brass; 15/32(0.468) in. -32NC-2 thd; 0.594 in. dia by 0.187 in. lg o/a dim.	503-8735-002
H203	NUT, CAP, SHELF: aluminum, gray enamel finish; 1 in. across flats, 5/8 in. lg	544-6951-002
H204	PLATE: aluminum, chromate dip finish; 0.040 in. by 3/8 in. by 1 in.	545-9118-002
H205	NUT, PLAIN, HEXAGON: aluminum, chromate dip finish chamfered; 4-40 NC-2B thd; 0.250 in. w across flats, 0.500 in. h o/a	540-9168-003
H206	NUT, PLAIN, HEXAGON: aluminum alloy, chemical film finish; no. 8-32 thd, 0.250 in. w across flats by 0.500 in. h o/a	540-9250-003
H207	SPACER, SLEEVE: aluminum, chromate dip; 0.122 in. max id, 0.192 in. max od, 0.255 in. max lg o/a	541-5979-002
J201	JACK, TIP: accommodates 1/8 in. plug; ceramic insulation, brass contacts; Cinch Mfg. Corp. part no. 201-11-01-018	360-0088-00
J202	JACK, TIP: same as J201	360-0088-00
J203	JACK, TIP: same as J201	360-0088-00
J204	CONNECTOR, RECEPTACLE, ELECTRICAL: 3 female contacts; low-loss plastic dielectric; 0.906 in. by 1.296 in. by 2.218 in. o/a dim.; Pass and Seymour, Inc. part no. DS2001	368-0115-00
K201	RELAY, ARMATURE: 1C, 15 amps, 115 v ac or 26.5 v dc; 6,000 ohms coil; Elgin Watch Co. type PC	970-1921-00
K202	RELAY, THERMAL: spst; 3 amp at 450 v ac or dc; 117 v; Thomas A. Edison Industries Division of McGraw Edison Co. part no. B2133	402-0331-00
K203	RELAY, ARMATURE: 2A, 15 amp, 110 v ac; 2A, 1 amp; 110 v ac; 42 ohm coil resistance; RBM Mfg. Co. part no. 98650-0416	970-1937-00
K204	RELAY, ARMATURE: 1B, 2 amp, 115 v ac; 0.35 ohms coil; Potter and Brumfield, Inc. part no. KR2609-2	970-1936-00
L201	REACTOR: 3.5 hy; 500 ma; 40 ohms resistance; Stancor Electronics, Inc. part no. 27488	668-0356-00
L202	REACTOR: 8 hy; 500 ma; 45 ohms resistance; Stancor Electronics, Inc. part no. 29397	668-0355-00
L203	COIL, RADIO FREQUENCY: universal wound, 3 pies, 675 turns; 2 mh nom inductance, 35 ma current rating; 2 #40 AWG copper wire leads; Fed. code 99800, Delevan Electronics part no. BP123	240-0084-00
M201	AMMETER: panel mtg,; dc; 200-0-500 ua; Simpson Electric type 27B	458-0483-00
M202	AMMETER: panel mtg,; dc; 0-1 amp; Simpson Electric type 27-B	458-0484-00
R201	RESISTOR, FIXED, WIREWOUND: 8.2 ohms ±10%, 100 w; Ohmite	711-2026-00
R202	RESISTOR, FIXED, COMPOSITION: 470 ohms ±10%, 2 w; Allen Bradley part no. HB	745-5638-00
R203	RESISTOR, FIXED, WIREWOUND: 5000 ohms ±10%, 25 w; Ohmite Mfg. type 0212	710-3542-00
R204	RESISTOR, FIXED, WIREWOUND: 10.1 ohms ±3%, 7 w; Dale Products Inc. part no. RS7/10R10G	746-9186-00
R205	RESISTOR, FIXED, WIREWOUND: 18,000 ohms ±10%, 100 w; Ohmite	710-2133-00
R206	RESISTOR, FIXED, WIREWOUND: same as R205	710-2133-00
R207	RESISTOR, FIXED, WIREWOUND: same as R205	710-2133-00
R208	NOT USED	
R209	RESISTOR, FIXED, FILM: 806 ohms ±1%, 1/2 w; IRC type MDC	705-7779-00
R210	RESISTOR, FIXED, COMPOSITION: 1000 ohms ±5%, 2 w; Allen Bradley type HB	745-5651-00
R211	RESISTOR, FIXED, COMPOSITION: 1.0 megohms ±5%, 2 w; Allen Bradley type HB	745-5777-00
R212	RESISTOR, FIXED, COMPOSITION: same as R211	745-5777-00
R213	RESISTOR, FIXED, COMPOSITION: same as R211	745-5777-00
R214	RESISTOR, FIXED, COMPOSITION: same as R211	745-5777-00
R215	RESISTOR, FIXED, WIREWOUND: same as R201	710-2026-00
R216	NOT USED	
R217	RESISTOR, FIXED, COMPOSITION: 0.20 megohms ±5%, 1/2 w; Allen Bradley EB	745-1448-00

ITEM	DESCRIPTION	COLLINS PART NUMBER
R218	RESISTOR, FIXED, COMPOSITION: 2200 ohms ±10%, 1 w; Allen radley type GB	745-3366-00
R219	RESISTOR, VARIABLE, WIREWOUND: 5,000 ohms ±10%, 2 w; Cgo. Tele. Supply type 252	377-0305-00
R220	RESISTOR, FIXED, COMPOSITION: 3300 ohms ±10%, 1 w; Allen Bradley type GB	745-3373-00
R221	RESISTOR, FIXED, FILM: 110 ohms ±1%, 1/4 w; IRC type MDB	705-7050-00
R222	RESISTOR, FIXED, WIREWOUND: 10 ohms, ±5%, 12 w; Clarostat Manufacturing Co., Inc.	747-1114-00
R223	RESISTOR, FIXED, WIREWOUND: same as R222	747-1114-00
R224	NOT USED	
R225	RESISTOR, FIXED, COMPOSITION: 56 ohms ±10%, 2 w; Allen Bradley type HB	745-5600-00
R226	RESISTOR, FIXED, FILM: 10,000 ohms ±1%, 2 w; Texas Instruments	705-4009-00
R227	RESISTOR, FIXED, FILM: 1000 ohms ±1%, 1/2 w; IRC type MDC	705-7596-00
R228	RESISTOR, FIXED, FILM: 12,100 ohms ±10%, 1/4 w; IRC type MDB	705-7148-00
R229	RESISTOR, FIXED, COMPOSITION: same as R211	745-5777-00
R230	RESISTOR, FIXED, WIREWOUND: 35 ohms ±10%, 25 w; Ward Leonard	735-0204-00
R231	RESISTOR, FIXED, COMPOSITION: 47,000 ohms ±10%, 1 w; Allen Bradley type GB	745-3422-00
R232	RESISTOR, FIXED, WIREWOUND: 10 ohms ±5%, 14 w; Clarostat Manufacturing Co., Inc.	747-0724-00
R233	RESISTOR, FIXED, WIREWOUND: same as R201	710-2026-00
R234	RESISTOR, FIXED, COMPOSITION: 47 ohms ±10%, 2 w; Allen Bradley type HB	745-5596-00
R235	RESISTOR, FIXED, COMPOSITION: 4700 ohms ±10%, 1 w; Allen Bradley type GB	745-3380-00
S201	SWITCH TOGGLE: 4 pdt, 30 amps, 125 v ac, 20 amps; 30 v dc, 20 amps resistive load; Cutler Hammer, Inc. part no. 7665K4	266-0072-00
S202	SWITCH, TOGGLE: spst; 250 v ac, 3 amp; 125 v ac, 6 amp; 120-240 v ac, 1/6 hp; Arrow, Hart and Hegeman Electric Co. part no. 83001	260-2613-00
S203	SWITCH, PUSH: spst, normally open; 0.5 amps at 250 v ac; black button marked "ON"; H.R. Kirkland type 1025-NO.	260-2696-00
S204	NOT USED	
S205	SWITCH, PUSH: spst, normally open, 125 v ac, 0.75 amps, 250 v ac, 0.25 amps; Culter Hammer, Inc. part no. 8411K4	260-2548-00
S206	HIGH VOLTAGE SHORTING SWITCH: c/o the following	
	DISC: brass, bright alloy plated finish; 1 1/2 in. dia by 1/16 in. thk	544-6905-002
	INSULATOR: phenolic; 0.250 in. by 0.260 in. by 1 in.	544-6906-002
	SHAFT: CRES, passivate finish; 1/4 in. dia by 4 1/16 in. lg	544-6924-002
	PLATE: cres, passivate finish; 0.0625 in. by 0.500 in. by 1.500 in.	544-6919-002
	SPRING: CRES, passivate finish; 17/64 in. id by 1 5/8 in. lg	544-6922-002
S207	SWITCH, ROTARY: 2 circuit, 2 pole, 6 position, 2 sections, 2 moving contacts, 14 fixed contacts; Oak Mfg. Co. type AH	259-1027-00
S208	SWITCH, PUSH: spst; normally closed; 0.5 amp at 250 v ac; red button marked "OFF"; H.R. Kirkland type 1025 NC	260-2697-00

ITEM	DESCRIPTION	COLLINS PART NUMBER
T201	TRANSFORMER, POWER, STEP-UP: 2 pri. 115 v ea; 50/60 cps; sec. 1, 6320 v, CT; sec. 2, 245 v; Stancor Electronics, Inc. part no. 29087	662-0351-00
T202	TRANSFORMER, POWER, STEP-DOWN: pri 115 v; 50/60 cps; sec. 2.5 v CT; Stancor Electronics, Inc. part no. 29212	662-0352-00
T203	TRANSFORMER, POWER, STEP-DOWN & STEP-UP: pri 115 v; 50/60 cps; sec. 1, 12.6 v; sec. 2, 125 v, CT; Stancor Electronics, Inc. part no. 27380	662-0353-00
TB201	TERMINAL BOARD: 5 terminals, barrier type, phenolic; 5/8 in. by 1 5/16 in. by 3 3/8 in.; Kulka Electric Mfg. Co., Inc. part no. 5-142-Y	337-0036-00
TB202	TERMINAL BOARD: phenolic; 1/16 in. by 2 in. by 2 3/16 in.	545-6149-002
V201	ELECTRON TUBE: rectifier type; Radio Corp. of America part no. 3B28	256-0096-00
V202	ELECTRON TUBE: same as V201	256-0096-00
V203	ELECTRON TUBE: twin diode type; Radio Corp. of America part no. 12AL5	255-0197-00
XCR201	NOT USED	
XCR202	NOT USED	
XCR203	NOT USED	
XCR204	NOT USED	
XCR205	NOT USED	
XCR206	HOLDER, SEMICONDUCTOR DEVICE: solder-lug terminals, 2 in. lg overall; Bussmann Fuse Division of McGraw-Edison Co. part no. 3754	265-1057-00
XCR207	NOT USED	
XCR208	NOT USED	
XCR209	HOLDER, SEMICONDUCTOR DEVICE: same as XCR206	265-1057-00
XDS201	LAMPHOLDER: for use with miniature bayonet bulb; 1-3/8 in. lg o/a; Micarta Fabricators, Inc. part no. DB718	262-1210-00
XDS202	LIGHT, INDICATOR: to be used with T-3-1/4, low voltage, midget bayonet base lamp; H.R. Kirkland Co. type 2025F	262-0627-00
XDS203	LAMPHOLDER: same as XDS201	262-1210-00
XF201	FUSEHOLDER: extractor post type; 250 v, 15 amp; accommodates one 0.250 in. dia by 1.250 in. lg cartridge fuse w/ferrule terminals; 0.687 in. dia by 2.140 in. lg o/a dim; Bussmann Fuse Division of McGraw-Edison Co. part no. HKP-HJR-ZZ	265-1019-00
XF202	FUSEHOLDER: same as XF201	265-1019-00
XF203	FUSEHOLDER: same as XF201	265-1019-00
XF204	FUSEHOLDER: same as XF201	265-1019-00
XF205	FUSEHOLDER: same as XF201	265-1019-00
XK201	NOT USED	
XK202	SOCKET, ELECTRON TUBE: stainless steel, phosphor bronze terminals, phenolic insulation; 0.812 in. by 1.187 in. by 1.625 in.; Amphenol-Borg Electronics Corp. part no. 88-8TM	220-1005-00
XV201	SOCKET, ELECTRON TUBE: 4 pin contact configuration silver plated copper contacts, ceramic body; 9/16 in. by 1-11/16 in. by 2 5/16 in. o/a dim; E.F. Johnson and Co. part no. 224	220-5450-00
XV202	SOCKET, ELECTRON TUBE: same as XV201	220-5450-00
XV203	SOCKET, ELECTRON TUBE: 7 pin miniature, molded construction; low loss composition; 0.343 in. h, 0.812 in. w, 1.125 in. lg o/a dim. excl terminals; Elco Mfg. Co., Inc. part no. 241BC	220-1044-00

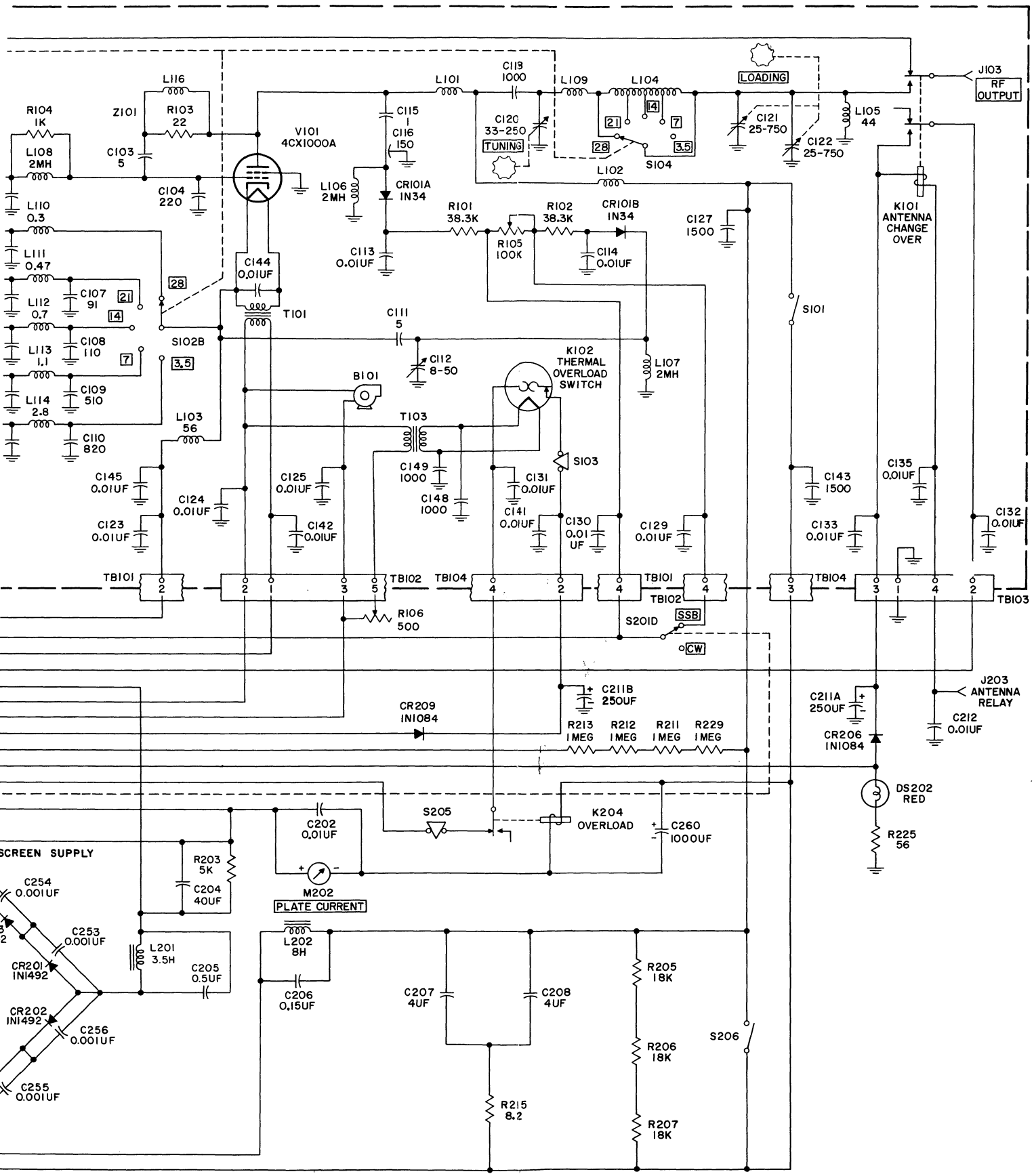

C432-12-6

Figure 15. 30S-1 R-F Linear Amplifier, Schematic Diagram

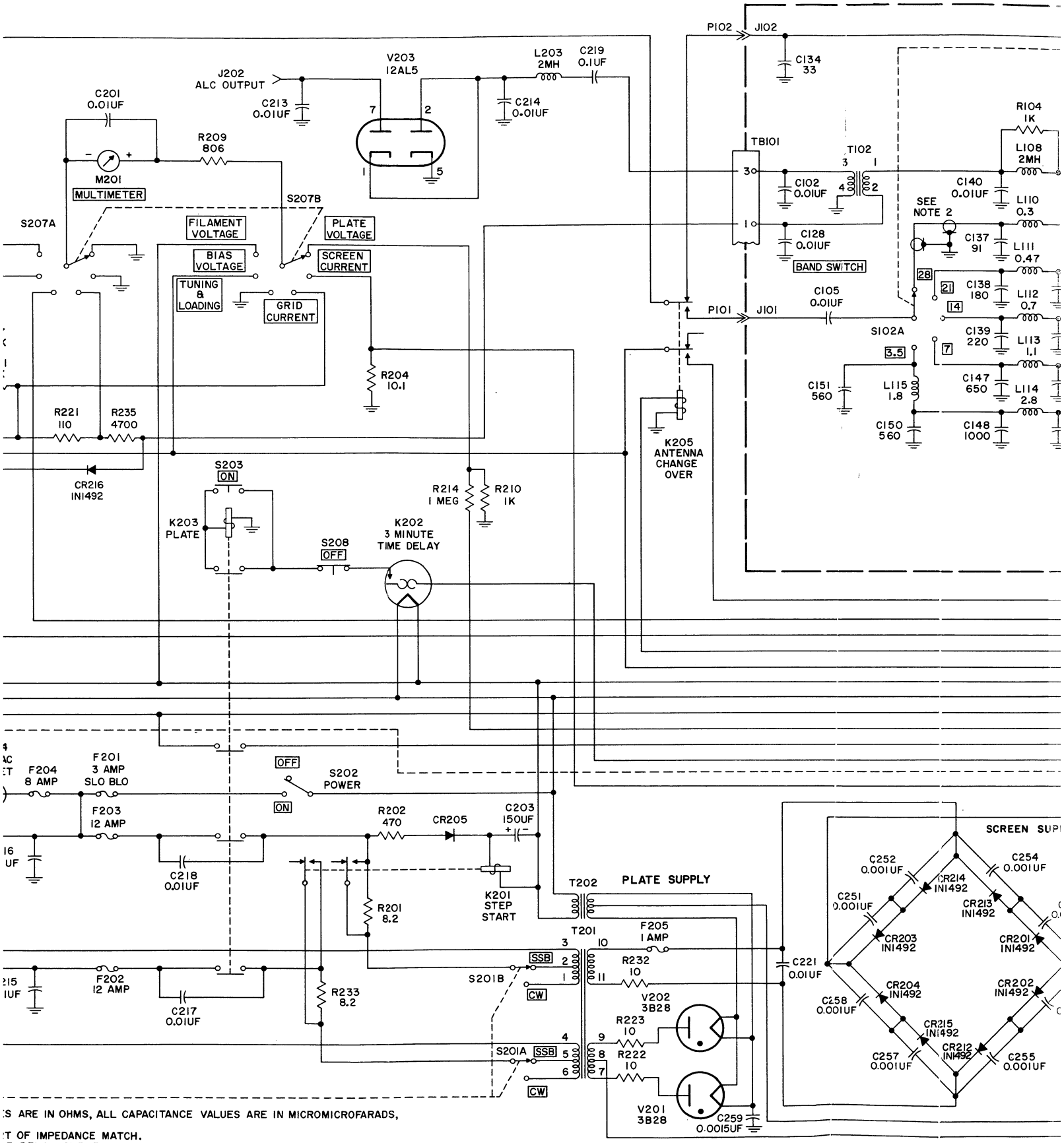

ES ARE IN OHMS, ALL CAPACITANCE VALUES ARE IN MICROMICROFARADS,

T OF IMPEDANCE MATCH.

F RELAY SHELF NEAR TB202.

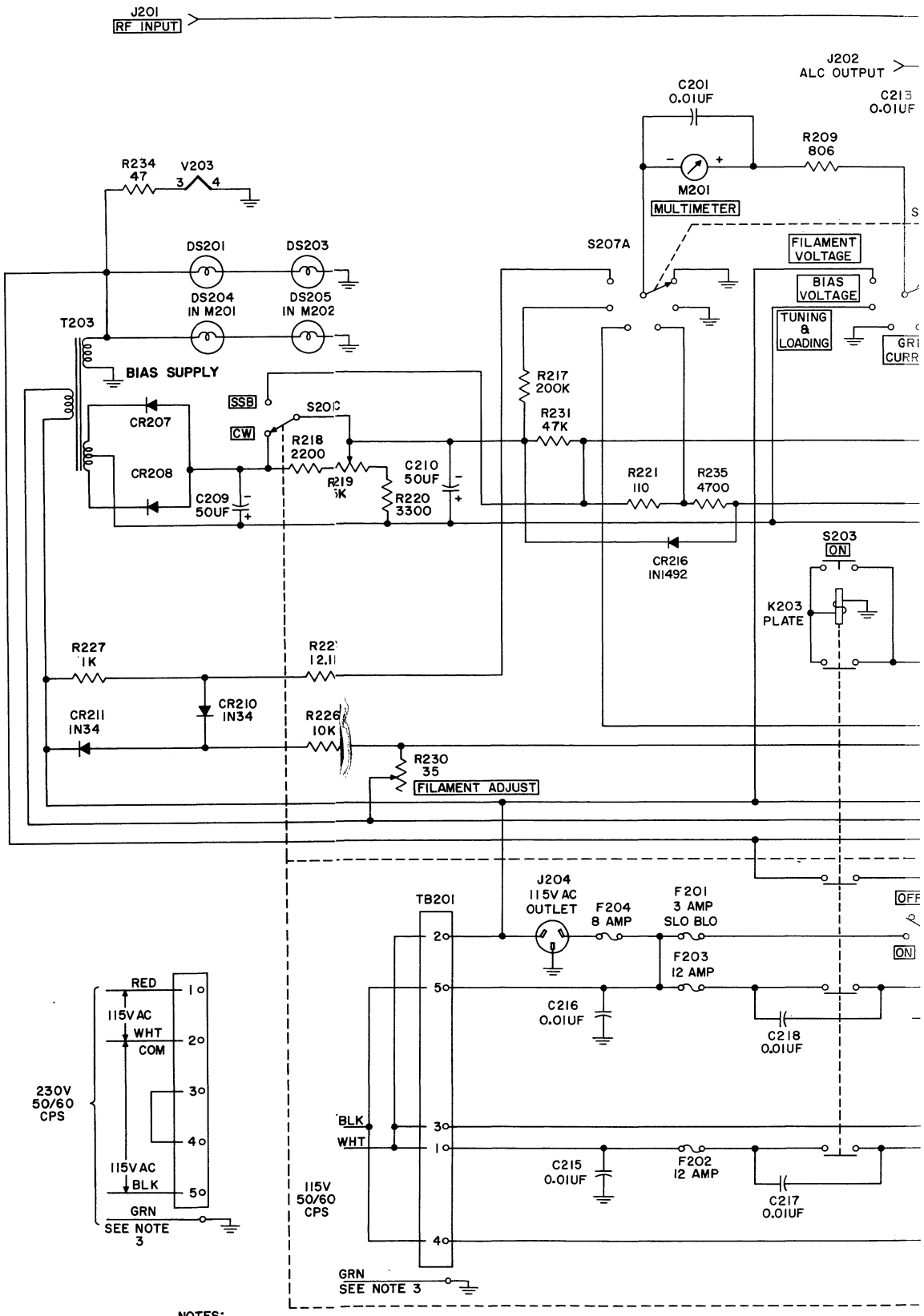

NOTES:
1. UNLESS OTHERWISE INDICATED, ALL RESISTANCE VALUES ARE IN OHMS, ALL CAPACITANCE VALUES ARE IN M
ALL INDUCTANCE VALUES ARE IN MICROHENRYS.
2. LENGTH OF THIS COAXIAL LEAD IS CRITICAL. IT IS PART OF IMPEDANCE MATCH.
3. ATTACH GREEN WIRE TO GROUND SCREW ON SIDE OF RELAY SHELF NEAR TB202.

COLLINS