18HTjr

10-80 meter Vertical antenna

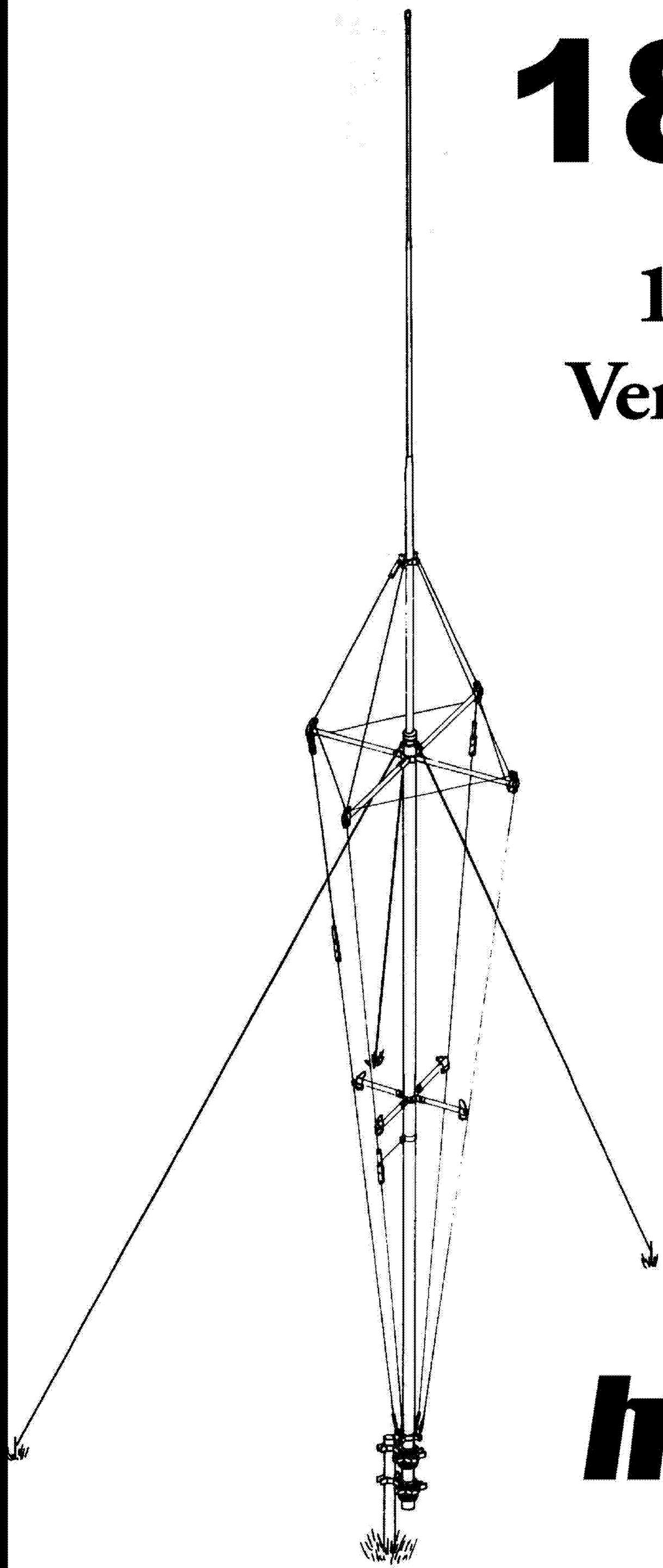

hy-gain®

General Description
The Hy-gain Model HT-18HTJR, High Tower Jr. is an omni-directional multiband vertical antenna. It was designed using stub decoupling for 10 thru 80meter operation with maximum efficiency. The stubs isolate various sections of the antenna so that an electrical ¼ wavelength exists on all bands. The High Tower Jr. will withstand 2 KW of RF power. The maximum overall height is approximately 39 feet.

Theory of Operation
Automatic band switching of 10 thru 80 meters is accomplished in the 18HTJR by the use of stub decoupling. In principle, a ¼ wave shorted stub is effectively an insulator, which decouples various sections of the antenna thereby maintaining a ¼ wavelength on all bands. The 18 HTJR is fed at a current point thus maintaining a 52ohm input impedance over an extremely wide bandwidth.

Construction
The main radiator of the 18HTJR is made up of high strength heavy walled aluminum tubing. Pre-cut wires form a "cage" about supporting crossarms to complete the antenna.

SWR and Feedline
The 18 HTJR is designed to be fed with 52ohm coaxial cable.
RG-8A/U is recommended because of its low loss and high power handling capability. The SWR at resonance is less than 1.2:1.

Grounding
The 18 HTJR is designed to use a simple grounding system consisting of one 8 foot ground rod as shown in Figure 1. Radials should be used for best performance.

Installation
The 18 HTJR mounts on a piece of 1-1/4" plumber's pipe. (Not supplied). The 1-1/4" plumbers pipe should be at least 8' long. Drive the pipe into the ground leaving about 20" above ground level as shown in Figure 1.
Note: The mechanical warranty is void if the guy wires are not used. The antenna will withstand approximately 40 MPH of wind without guys.

Before you Begin
Before you unpack the antenna, find a good location to assemble it. You will need something to support the antenna while it is being assembled. A sawhorse or small ladder should be used to prevent the antenna from resting on the crossarms or wires. The antenna will be 39 feet long when assembled so moving it after it is put together might not be easy. Pick a place that you can find nuts and bolts easily when you drop them because you ***WILL*** drop them. A few extra of the smaller hardware are included in the parts pack so you should have some left over when you are finished.

Step-by-Step Assembly
( ) Unpack the 18HTJR and check all parts against the parts list and the illustrations. This will help you to become familiar with the antenna and aid in assembling. The wires have been separated into packs to make construction less confusing. Pictures of the assembly process have been used wherever possible. If you become confused about the location or assembly of a part, some of the other diagrams later in the assembly may be of help. Take your time assembling the antenna. You should be able to assemble the antenna by yourself but a friend will make it much easier. When the antenna is finished you will need a friend anyway to stand it up and mount it. Although the antenna is fairly lightweight, it is big and difficult for one person to handle.

WARNING
Do Not install this antenna near power lines or other high voltage sources. You will be killed if this antenna comes into contact with overhead power lines. The antenna should not be mounted where if it fell, it would contact a power line.

Main Mast assembly

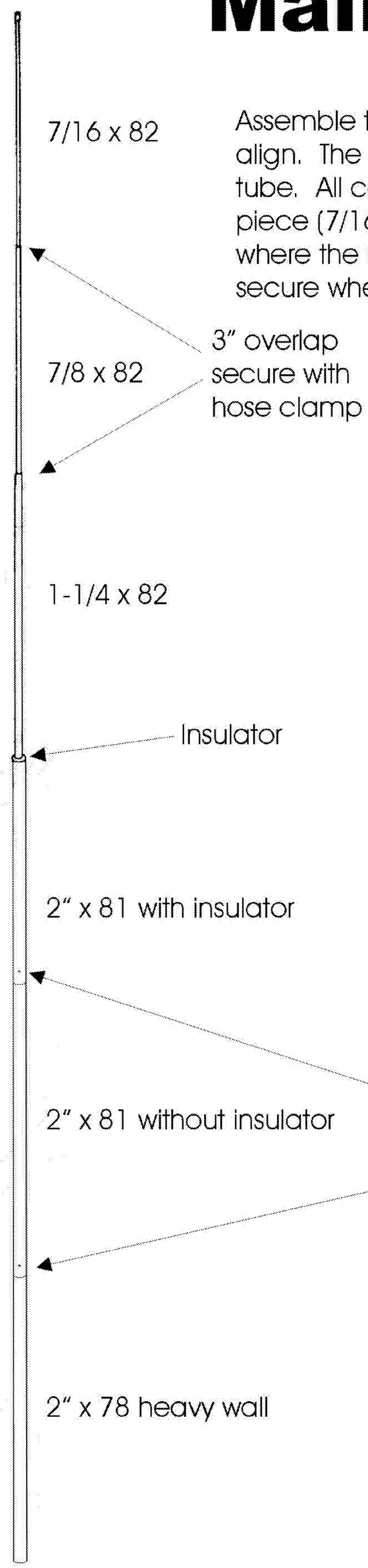

Assemble the mast as shown. Slide the 2" sections together until the holes align. The three upper sections should be inserted 3 inches into the next tube. All connections can be secured at this time except for the very top piece (7/16 x 82). This will be adjusted later for tunning. The connection where the insulator is may have some play. This is normal. It will be secure when the wire cage is in place.

3" overlap secure with hose clamp

Items used on this page.

1	174894	2" x .120 x 78"
1	174896	2" x .049 x 81
1	174895	2" x .049 x 81 w/insulator
1	871461	1-¼ x 82"
1	174893	7/8 x 82"
1	172401	7/16 x 82"
2	505736	¼-20 x 2-¼ bolt
2	554099	¼" hex nut
2	561177	¼" split washer
2	754-3110S	#10 hose clamp

Fasten with 1/4-20 x 2-1/4 bolt nut and split washer

Crossarm assembly

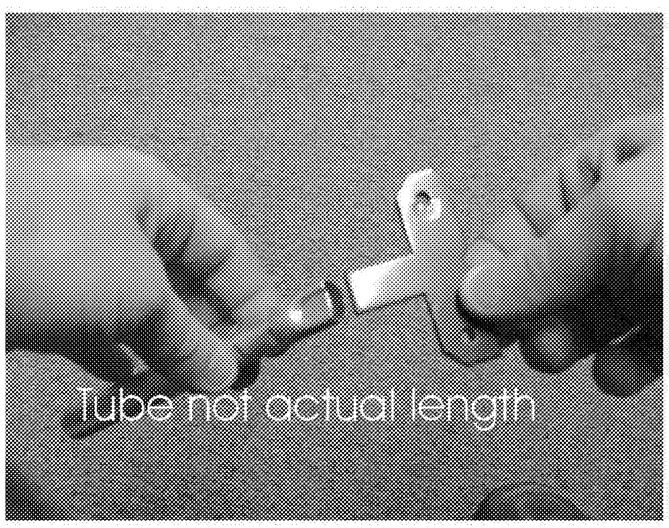

Select the 8 crossarm tubes (4 long and 4 short). These are the 5/8 inch diameter tubes that have a formed end like the one in the picture. Insert the 8 plastic insulators into the 8 crossarm tubes as shown. The insulators will be a snug fit and some of the corners may get rounded off as it slides into the tubing.

Assemble the four brackets loosely using a few of the 10-24 x½ bolts nuts and lock washers. Slide the bracket onto the main mast just below the center insulator as shown. There is a pre drilled hole in the mast at this point. Align one of the holes in the top of the bracket with this hole and insert a 10-24 x 2-½ bolt all the way through the tube. Secure with a lock washer and nut. This is the only bracket whose orientation is fixed. All other brackets will be aligned with this one. Insert the long crossarm tubes with the plastic insulators into the bracket. The arms should contact the mast tube. This is not an electrical connection but prevents the tubes from sliding inward later. Rotate the tubes until the plastic insulators are vertical. Install the remaining 10-24 x ½ bolts, lock washers and nuts. Tighten all at this time.

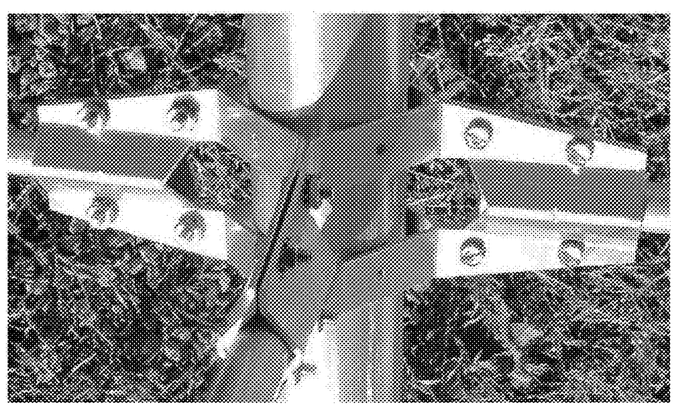

The lower crossarm bracket should be installed in the same manner as the first with a few exceptions. There is no hole in the mast where the bracket will be installed. This allows the bracket to slide up and down the mast for adjustment. The crossarm tubes should not be inserted all the way in. Allow the gap inside the bracket to remain open. This will is for individual support arm adjustment later. The plastic insulators should be horizonal. The wire elements will sit inside the notch once they are in place.. The bracket should be placed about half way down the 2 inch mast section. Hand tighten the bracket at this time. It will be moved later.

Qty	P/N	Desc
32	500158	10-24 x ½ bolt
33	711-10375-EX	#10 lock washer
33	554071	10-24 nut
1	500105	10-24 x 2-¼
8	172738	crossarm bracket
4	173346	5/8 x 21" tube
4	172499	5/8 x 36" tube
8	463244	crossarm insulator

Wire anchor assembly

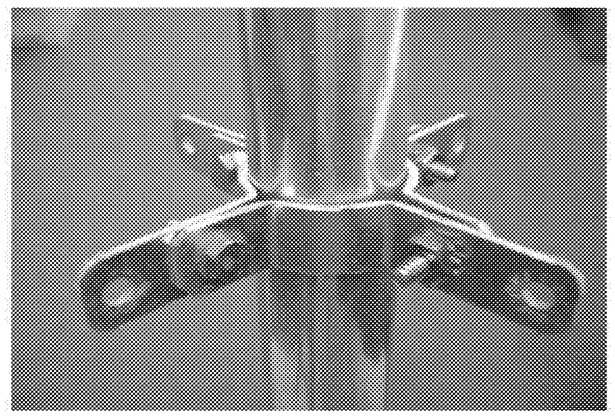

Install the upper wire anchor about 4 feet above the insulator as shown use the 10-24 x 1" bolts, nuts and lock washers. Do not tighten them at this time. This bracket will be moved later once the wires have been attached.

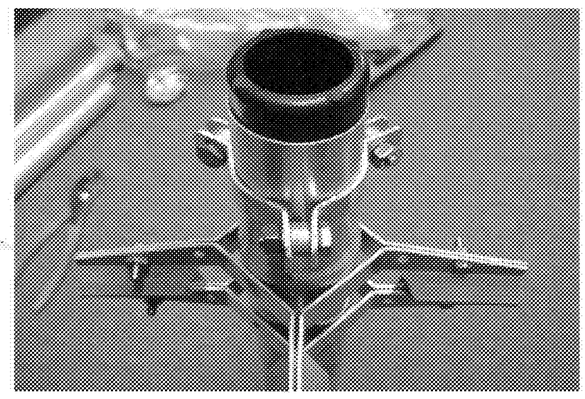

Install the guy rope bracket using the three brackets shown. This bracket can be identified by only have two holes in each strip of aluminum. Assemble two of the three bolts with the ¼ -20 bolts, nuts and washers and wrap it around the mast where the insulator is inserted into the swage. Insert the last spacer and secure. Align it so that the rope will not interfere with the crossarms.

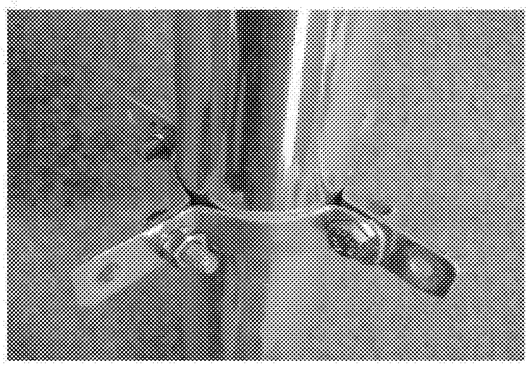

Install the lower bracket about 15 inches from the bottom of the antenna using the ¼ - 20 x ¾ bolts, nuts and lock washers. Do not tighten the bracket at this time.

Items used

Qty	P/N	Description
4	172739	clamp, upper anchor
3	172741	clamp, guy anchor
4	173452	clamp, lower anchor
7	505266	¼-20 x ¾ bolt
7	554099	¼-20 hex nut
7	562961	¼ lock washer
4	504069	10-24 x 1 bolt
4	554071	10-24 nut
4	711-10375-EX	#10 lock washer

Mounting Plate assembly

Assemble the Mast plate using the four u-bolts supplied. The plate has bends on each side for strength. The bends should be on the ground mast side. Holes are provided on the plate for ground attachment, make sure these hole are at the bottom. Attach the u-bolts using the 5/16 nuts and split washers. The upper u-bolt on each set should be used to hold the antenna. The lower u-bolt on each set should be used on the ground mast side and should have a saddle on each. Slide the abs insulators onto the bottom of the antenna. Leave enough of the antenna sticking out the bottom insulator so that a 10-24 bolt may be used to attach the coax lead to the main mast. Slide the mast plate onto the antenna an level the bottom of the antenna with the bottom of the mast plate. Make sure the top insulator does not interfere with the wire anchor that is just above it. Remember that the wire anchor will be slid down later to tighten the wires.

Qty	P/N	Description
1	172734	Mast Plate
2	758-9196	U-bolt saddles
2	475500	insulator 2"
8	555747	5/16 Hex nut
8	564792	5/16 split washer
4	5136900	U-bolt 5/16

10 Meter wire assembly

Open the 10 meter wire pack. Install the 3 wires in the pack as shown in the diagrams. Use the 10-24 x ½ bolts, nuts and lock washers. If the insulator is attached to the crossarm insulator, a longer 10-24 x 1 must be used. Attach the 2 aluminum strips and the insulator onto the driven element. The measured lengths given in the manual do not include the strips. These are used for final tunning of the 10 meter band. By changing where the insulator is placed on the wire, you can change the electrical length of the stub. Place the 2 inch tubing clamp so that the 20 inch wire is level. Adjustment of the clamp placement may be needed to tune for best swr on 10 meters.

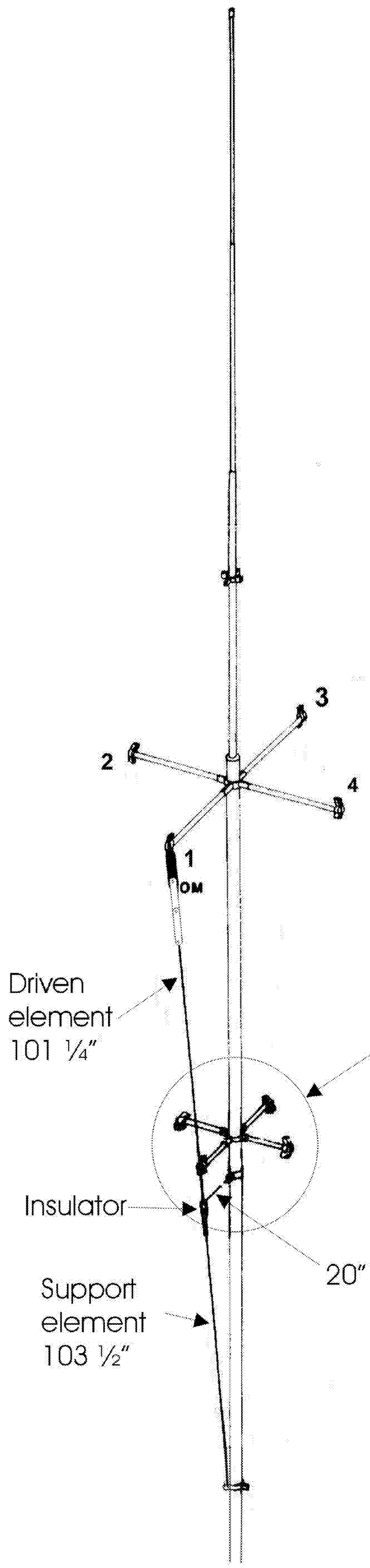

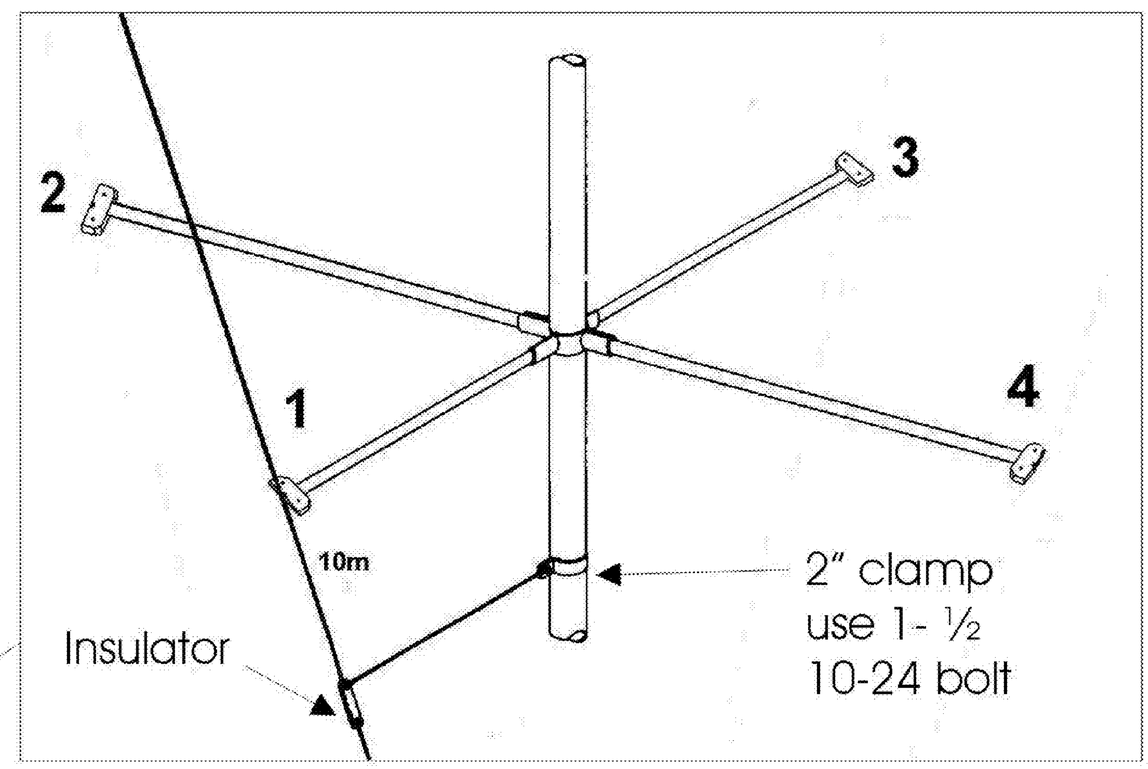

Items used on this page

QTY	P/N	Description
1	871390	10 meter wire assy
6	-----500158 --------	10-24 x ½"
8	-----711-10375-EX	lock washer
8	-----554071 --------	hex nut 10-24
1	-----504069 --------	10-24 x 1 bolt
1	-----500159 ---------	10-24 x 1-½ bolt

15 Meter wire assembly

Assemble the 15 meter wire as shown and attach it from crossarm #2 to the bottom wire anchor that is aligned with it. Where the insulator attaches to the crossarm you must us the 10-24 x 1 bolt. All others use the ½ inch bolt.

Items used on this page

QTY	P/N	Description
6	500158	10-24 x ½" bolt
1	504069	10-24 x 1" bolt
7	554071	hex nut 10-24
7	711-10375-EX	#10 lock washer
1	871408	15 meter wire assy

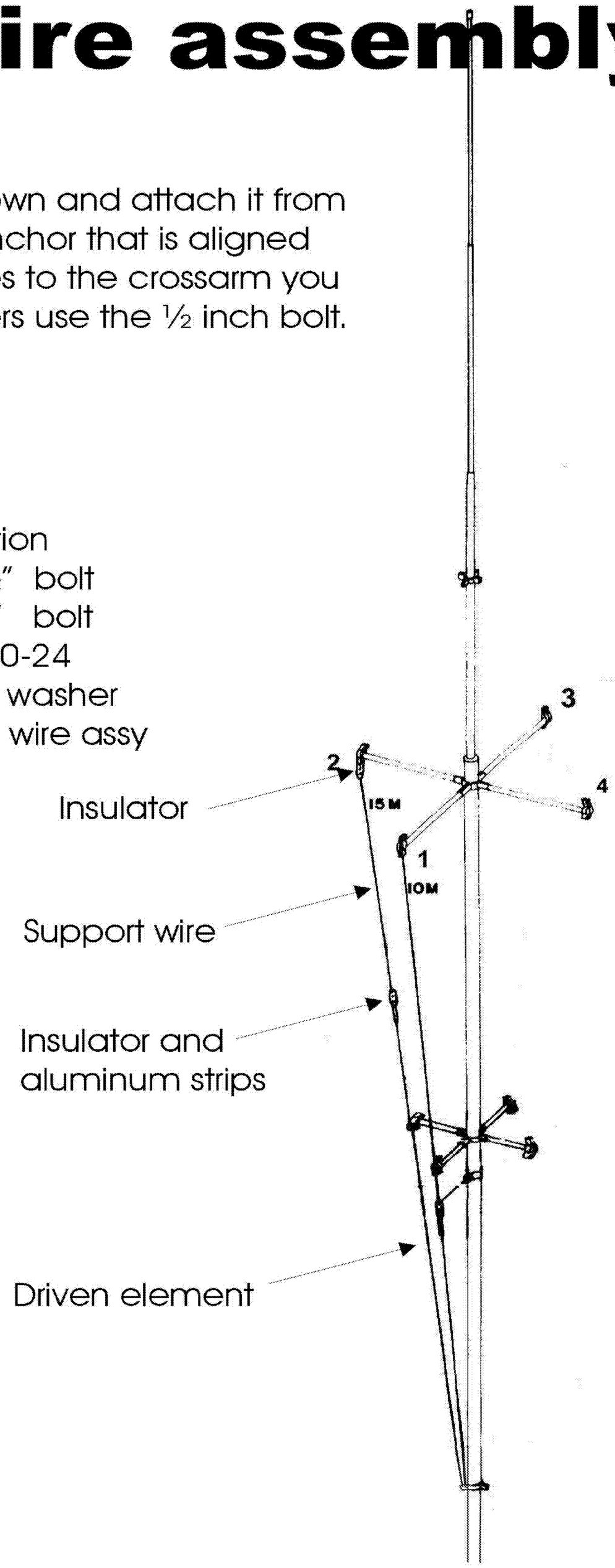

20 Meter wire assembly

Attach the 20 meter wire as shown on crossarm #3 and the wire anchor that aligns with it.

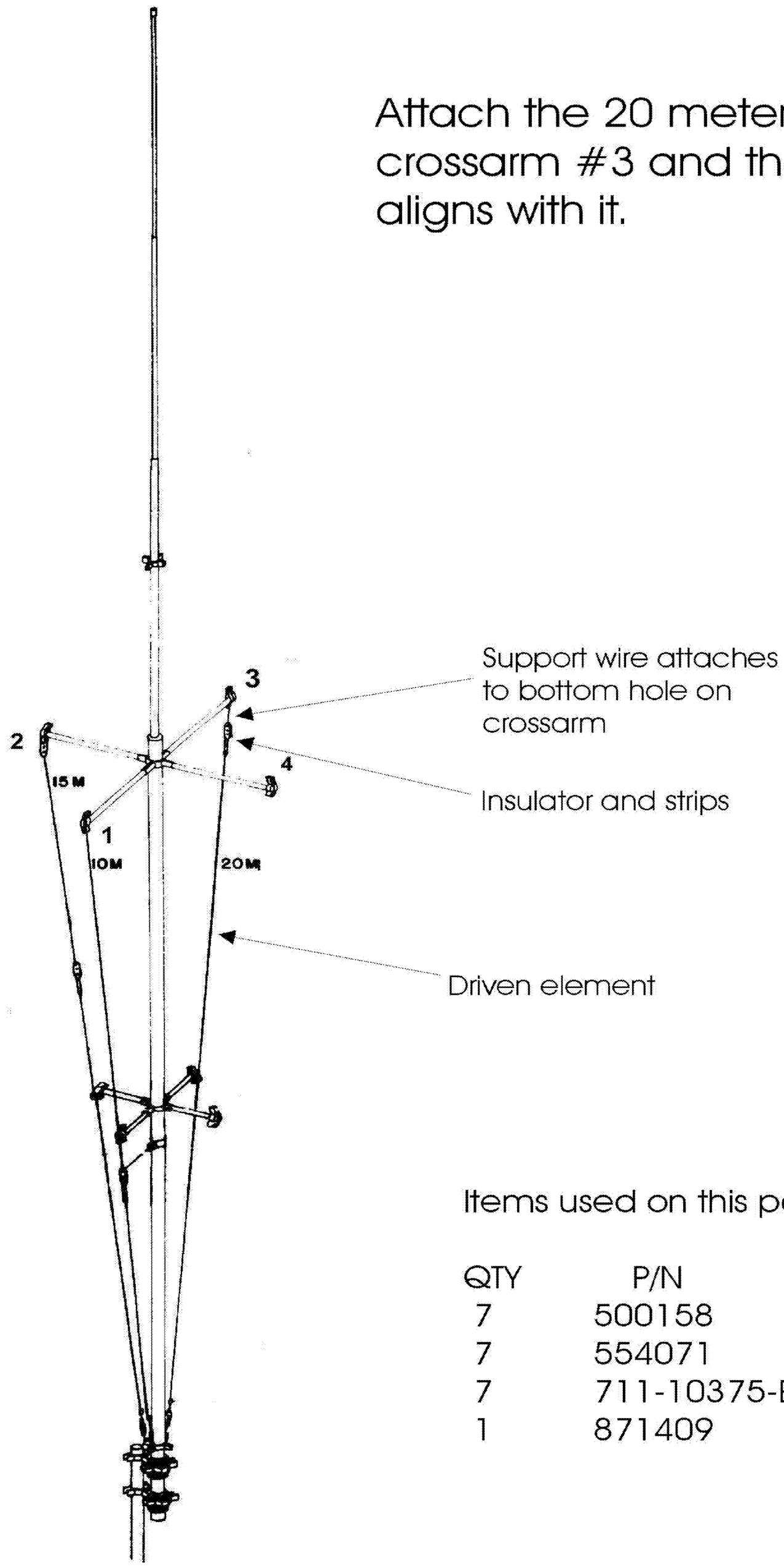

Items used on this page

QTY	P/N	Description
7	500158	10-24 x ½" bolt
7	554071	hex nut 10-24
7	711-10375-EX	#10 lock washer
1	871409	20 meter wire assy

80 Meter wire assy page

Install the 80 meter wire as shown. Use the diagram to attach each wire to the proper location. More that one wire may be connected to one point so leave all bolts loose until your finished.

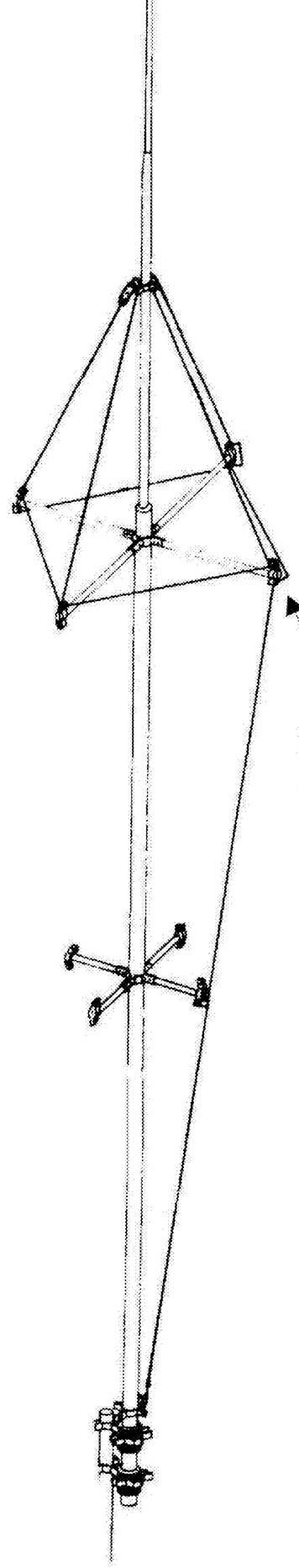

The 80 meter jumper wire must be installed at one of the crossarm insulators from the bottom to the top lugs. It may be installed at arm 2, 3, or 4, depending on what part of the 80 meter band you wish to operate.

Attach to bottom of #4

Insulator

Once assembled, slide the anchor bracket up to tighten the wires

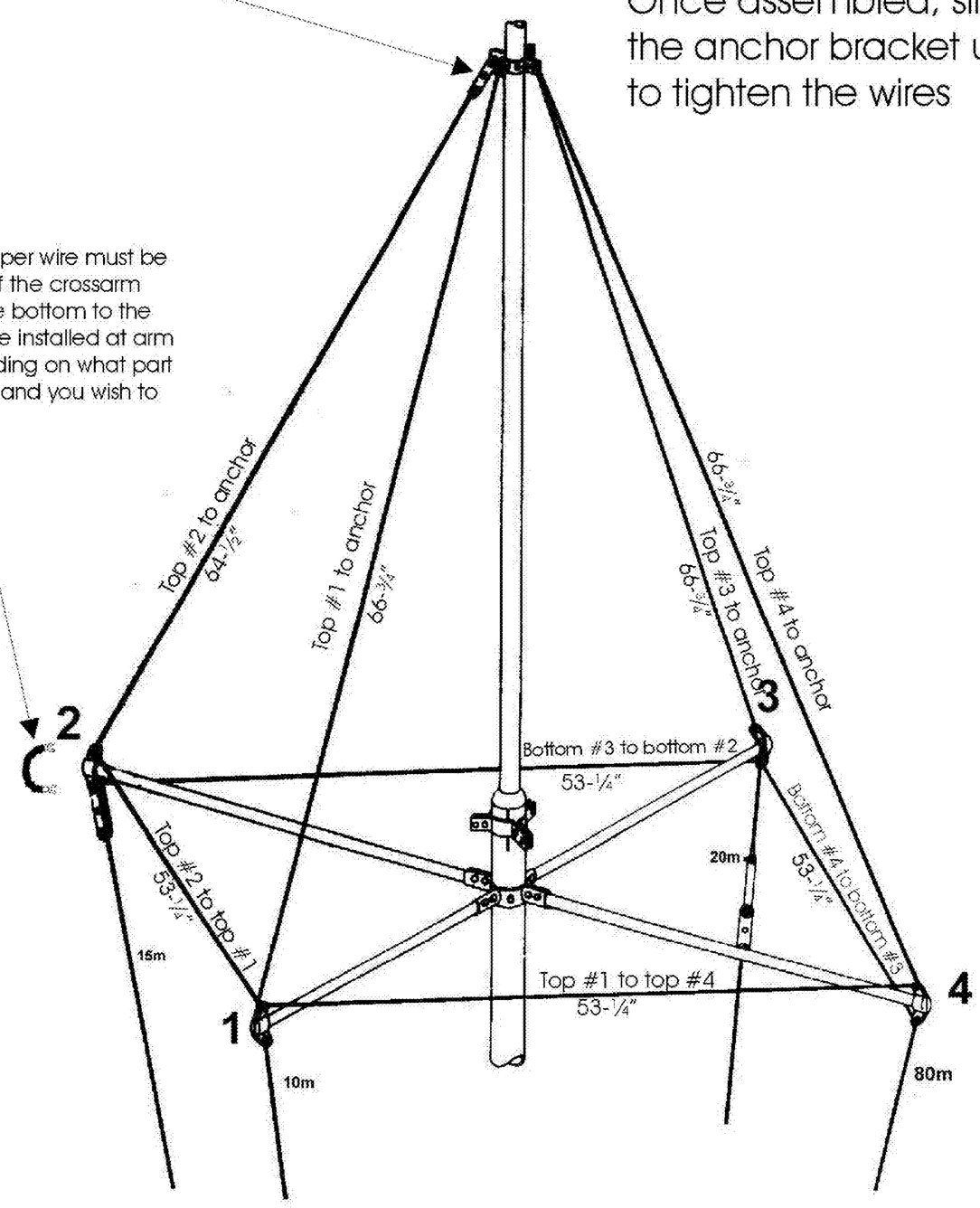

Items used on this page

QTY	P/N	Description
10	500158	10-24 x ½" bolt
10	554071	hex nut 10-24
10	711-10375-EX	#10 lock washer
1	871408	80 meter wire assy

Final adjustments

The antenna now should be completely assembled. Slide the lower wire anchor bracket down to tighten the wires and secure in place. The lower crossarm bracket should be adjusted until the crossarm insulators just contact the 10,20,15, and 80 wires. These crossarms keep the wires steady and tight. Install the 4 cable ties as shown in the picture. The wires should set inside the notch cut into the insulators.

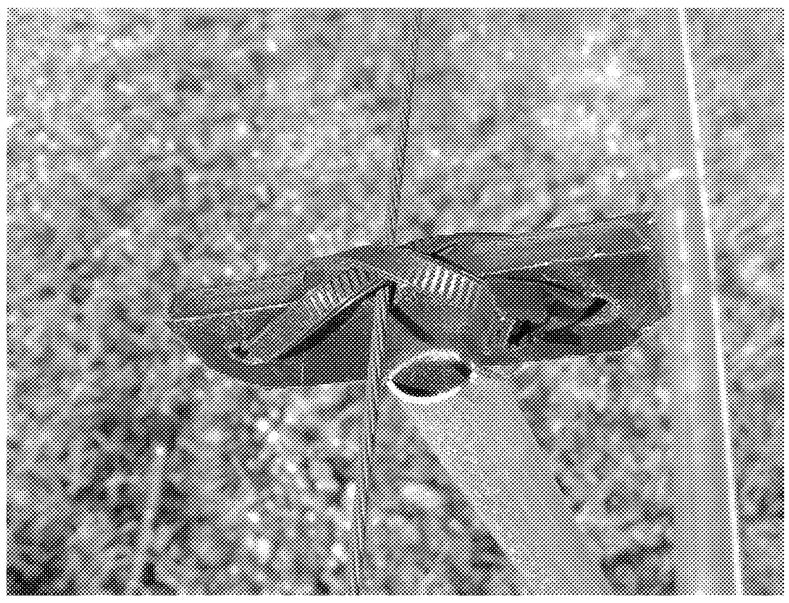

Install the tie in a figure 8 pattern. This will prevent the wire from slipping out of the notch.

Erecting the antenna

Before you raise the antenna, double check that all hardware is tight. Find the guy rope and cut it into 3 equal lengths. Attach the guy ropes to the guy bracket just above the upper crossarms by threading it around the spacers and tying your favorite knot. After the antenna is tuned, permanently secure the guy wires to suitable anchors on the ground about 18 ft out from the base of the antenna. The antenna will stand easily without the guy wires but are needed for permanent installation. Find a friend and mount the antenna onto a 1-¼ plumbers pipe or equivalent (not supplied). Attach coax to the antenna by connecting the shield braid to the mounting plate or other suitable ground. Connect the center conductor to the main mast at the hole on the bottom of the antenna using a 10-24 x ½ bolt, nut and lock washer. Because the antenna may sag to one side during assembly on the ground, some of the wires may not be tight when you have the antenna up. Readjustment of the lower crossarms and lower wire anchor may be necessary.

Tunning the antenna

The antenna should be close to resonance on each band once assembled. It is best to use an antenna analyzer such as the MFJ-259 for measurements. The antenna must be lowered to make adjustments to the wires and tubing. Always adjust 40 meters first. Slide the 7/16 tubing at the very top of the antenna in and out of the adjacent section to change the resonance point on 40. Tune for the portion of the band you wish to operate.

80 Meters can be adjusted by changing where the small jumper is located on the crossarms. Crossarm 2, 3, or 4 can be used to select a part of the band. 4 will select the upper ssb part of 80 while 2 selects the lower cw part. Keep in mind that adjusting the 7/16 tubing at the top of the mast also affects the 80 meter tuning so a happy medium may be needed for both bands.

The rest of the bands are adjusted by moving the insulator located at top of each wire element. Changing where the insulator is located on the wire will electrically change the length of the wire without physically changing it. Making the wire longer will lower the resonant point of that band.

Part #	Qty	Description
Tubing		
174894	1	-- tubing, 2 x 120 x 78” swaged
174896	1	-- tubing, 2 x 81” swaged
174895	1	-- tubing, 2 x 81”
871461	1	-- tubing, 1-1/4 x 82”
172401	1	-- tubing, 7/16 x 82”
174893	1	-- tubing, 7/8 x 82”
172499	4	-- top Cross Arm, 5/8 x 36”
173346	4	-- lower Cross Arm, 5/8 x 21”

871390	**1**	**10 Meter Wire Assembly**
465416	2	-- Insulator
163312-0	2	-- Aluminum Strip,
171077	1	-- 2” tubing clamp
871464	1	-- Wire, 101 ¼”
871465	1	-- Wire, 103 ½”
871466	1	-- Wire, 20”

871408	**1**	**15 Meter Wire Assembly**
465416	1	-- Insulator
163312-0	2	-- Aluminum Strip,
871467	1	-- Wire, 122 ½”
871468	1	-- Wire, 84 ½”

871409	**1**	**20 Meter Wire Assembly**
465416	1	-- Insulator
163312-0	3	-- Aluminum Strip,
871471	1	-- Wire, 198”
871472	1	-- Wire, 5”

871438	**1**	**80 Meter Wire Assembly**
871474	1	-- Wire, 215 ½ ”
871481	1	-- Wire, 64 ½ ”
871484	1	-- Wire 2”
465416	1	-- Insulator
871475	3	-- Wire, 66 ¾ “
871478	4	-- Wire, 53 ¼ ”

871448	**1**	**Parts Package “A”**
7452158B	4	-- Black cable tie
172739	4	-- Clamp, Upper Wire Anchor
172741	3	-- Clamp, Guy Rope
173452	4	-- Clamp, Lower Wire Anchor
455644	1	-- Caplug, 7/16”
7153159	3	-- Spacer
463244	8	-- Insulator, Crossarm,

879888	**1**	**PARTS PACK “B”**
500105	1	-- bolt 10-24 x 2-1/4”
500159	1	-- bolt, 10-24 x 1-½”
500158	65	-- bolt, 10-24 x ½”
504069	6	-- bolt, 10-24 x 1”
505266	7	-- bolt, ¼-20 x ¾ ”
505736	2	-- bolt, ¼-20 x 2-¼ ”
554099	9	-- Nut, ¼-20 Hex
555747	8	-- Nut, 5/16 Hex
554071	65	-- Nut, 10-24 Hex
562961	7	-- Lock washer, ¼”
71110375EX	65	-- Lock washer, #10
564792	8	-- split washer 5/16
561177	2	-- split washer ¼”
758-9196	2	-- U bolt Saddles
5136900	4	-- U bolt
7543110S	2	-- #10 hose clamp

475500	2	Insulator, Base, 2” ID
172734	1	Base Mounting plate
172738	8	Clamp, Crossarm Bracket
878697	1	Penetrox®
635365	1	Guy rope 90 ft

hy-gain® LIMITED WARRANTY

hy-gain Warrants to the original owner of this product, if manufactured by ***hy-gain*** and purchased from an authorized dealer or directly from ***hy-gain*** to be free from defects in material and workmanship for a period of **12** months for rotator products and **24** months for antenna products from date of purchase provided the following terms of this warranty are satisfied.

1. The purchaser must retain the dated proof-of-purchase (bill of sale, canceled check, credit card or money order receipt, etc.) describing the product to establish the validity of the warranty claim and submit the original or machine reproduction of such proof-of-purchase to ***hy-gain*** at the time of warranty service. ***hy-gain*** shall have the discretion to deny warranty without dated proof-of-purchase. Any evidence of alteration, erasure, or forgery shall be cause to void any and all warranty terms immediately.

2. ***hy-gain*** agrees to repair or replace at ***hy-gain's*** option without charge to the original owner any defective product under warranty, provided the product is returned postage prepaid to ***hy-gain.***

3. Under no circumstances is ***hy-gain*** liable for consequential damages to person or property by the use of any ***hy-gain*** products.

4. Out-of-warranty Service: ***hy-gain*** will repair any out-of-warranty product provided the unit is shipped prepaid. All repaired units will be shipped COD to the owner. Repair charges will be added to the COD fee unless other arrangements are made.

5. This warranty is given in lieu of any other warranty expressed or implied.

6. ***hy-gain*** reserves the right to make changes or improvements in design or manufacture without incurring any obligation to install such changes upon any of the products previously manufactured.

7. All ***hy-gain*** products to be serviced in-warranty or out-of-warranty should be addressed to ***hy-gain*, 308 Industrial Park Road, Starkville, Mississippi 39759, USA** and must be accompanied by a letter describing the problem in detail along with a copy of your dated proof-of-purchase.

8. This warranty gives you specific rights, and you may also have other rights which vary from state to state.