KOHJINSHA

# VERSA Beam

VERSATILE Antenna to cover all over the world sky.

## KA1-204 Lite

| | |
|---|---|
| 14～28MHz | 4 Elements |
| 50MHz | 6Elements |
| Ref・Ra 6-D1～6-D4 | |

MOTOR Number

① Radiator

② Reflector

③ No.1 Director
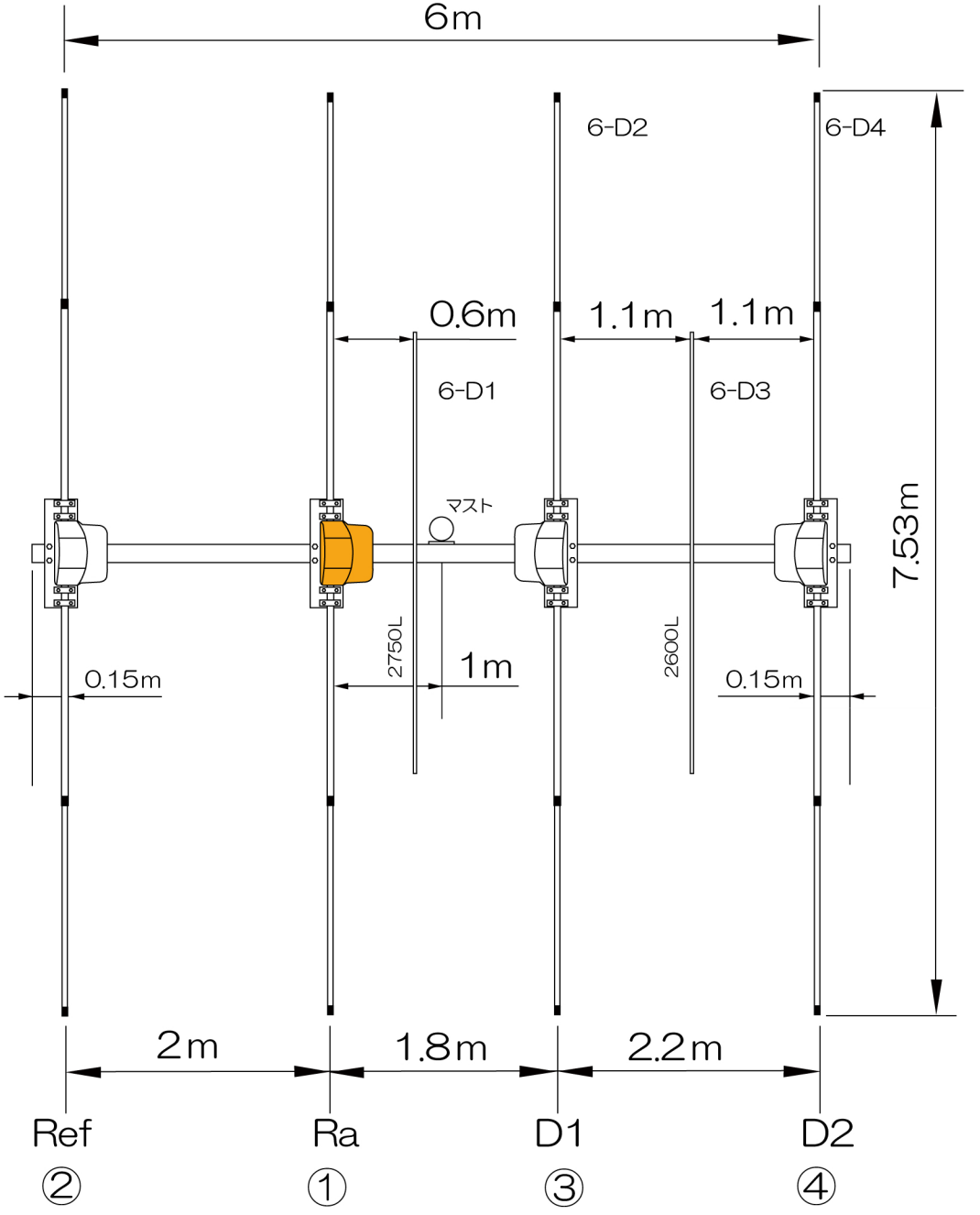
④ No.2 Director