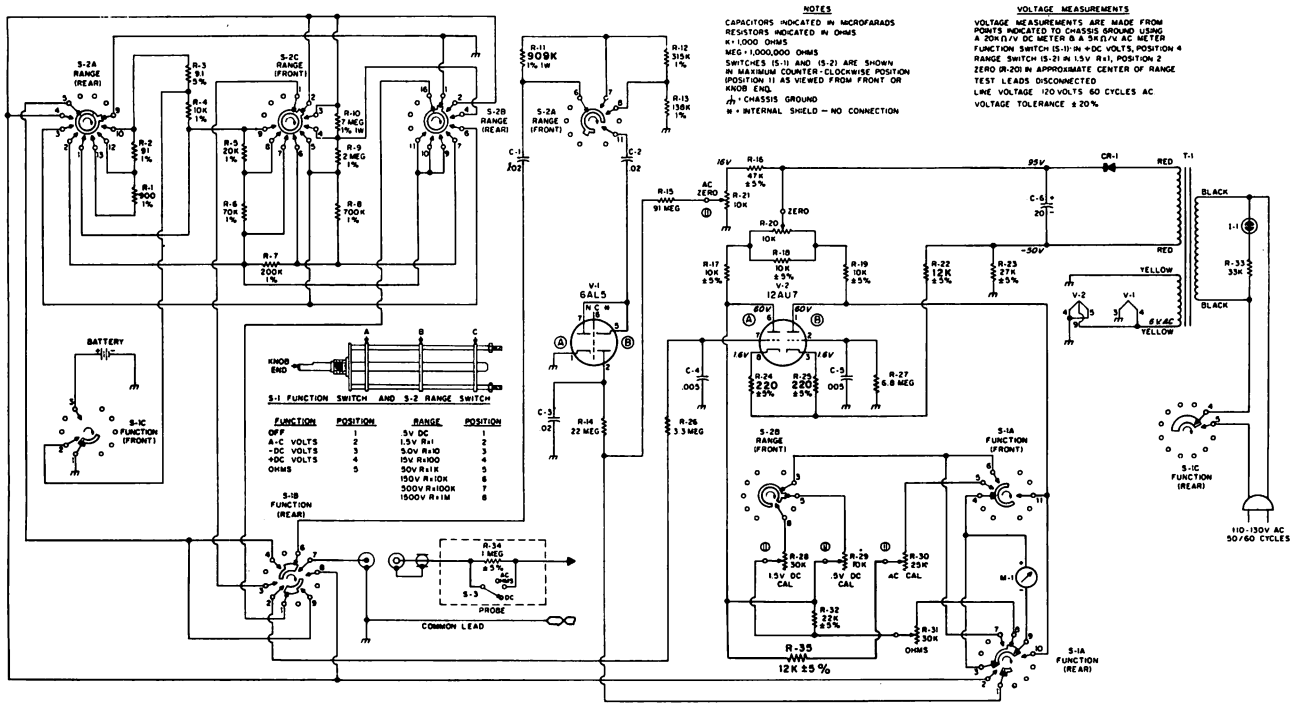

Fig. 8-3. Knight-Kit KG-625 VTVM schematic.