GENERAL:

The WM-2000 is a precision built through-line wattmeter. Our newly desinged flat frequency response directional coupler enables you to read traveling wave power with maximum accuracy from 3.5 to 30 MHz.

Direct reading of V.S.W.R. is also available with the FS-301.

SPECIFICATIONS:

Measuring method	Directional coupler
Power range	3 scales 0 — 200, 1000, 2000 W
SWR measuring range	1 : 1 — 3 : 1
Impedance	50 ohm
Measuring accuracy	±7% power, ±5% SWR
Frequency range	3.5 — 30 MHz
Connector	SO-239
Dimensions	8"W × 4"H × 5.2"D

INSTALLATION:

Disconnect the antenna cable from the transceiver and connect it to the "ANTENNA" receptacle of this unit.

Connect a short length of coax cable between the transceiver and the "TRANSMITTER" receptacle of the WM-2000

POWER MEASUREMENT:

The power meter is factory calibrated to maximum accuracy. No adjustments are necessary for power meter function.

(1) Set the rotary switch to obtain convenient meter reading.
(2) Turn transmitter on and read power on the scale directly.

This power meter is quite stable against load impedance; however, best accuracy is obtained with an accurate 50 ohm load, and SWR should be as possible to 1 to 1.

V.S.W.R MEASUREMENT:

(1) Set the rotary switch to "FWD."
(2) Turn transmitter on and rotate the "SWR SET" knob until full meter swing is achieved. This is the "SET" mark on the scale.
(3) Set the rotary switch to "REF" then read the SWR on the bottom scale.

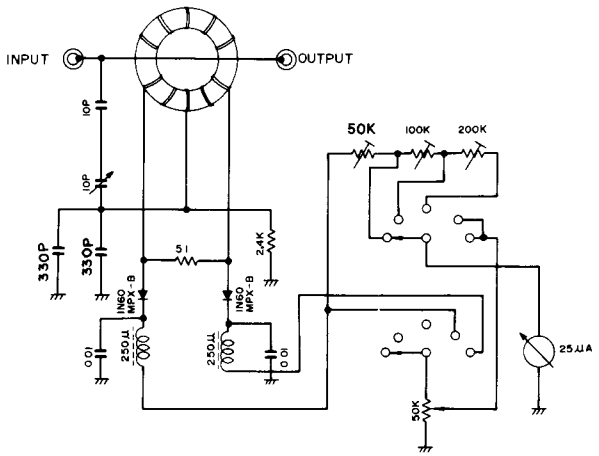

CAUTION:

Do not disconnect the antenna cable while transmitting.

Tighten all cable connections.