TT TRIPLETT

INSTRUCTION MANUAL

MODEL 630-NA TYPE 3

VOLT-OHM-MILLIAMMETER

INSTRUCTION MANUAL

TRIPLETT

MODEL 630-NA TYPE 3
VOLT-OHM-MILLIAMMETER

Triplett Corporation
Bluffton, Ohio 45817

WARNING

Electrical circuits can be dangerous and/or lethal when carelessness or poor safety practices occur. Every effort has been made to design this test equipment to prevent accidental shock, but no instrument can be completely safe when used incorrectly.

READ THE MANUAL

Voltages and currents within the capability of this test equipment can be hazardous. Follow the instructions in this manual for every measurement. Read and understand the general instructions before attempting to use this tester.

SAFETY CHECK

Double check the switch setting and lead connections before making measurements. Are you following all of the instructions?

Disconnect the tester or turn off the power before changing switch positions.

DON'T TOUCH

Don't touch exposed wiring, connections or other "live" parts of an electrical circuit. If in doubt, check the circuit first for voltage before touching it.

Turn off the power to a circuit before clipping test probes to it. Be sure there is no voltage present before you touch the circuit.

HIGH VOLTAGE IS DANGEROUS

Always start with the power off. Be sure there is no voltage present before making connections to the circuit.

Don't touch the tester, its test leads, or any part of the circuit while it is on.

Before disconnecting the tester, turn the circuit off and wait for the meter to return to "zero."

DISTRIBUTION CIRCUITS PACK A PUNCH

In high energy circuits such as distribution transformers and bus bars, dangerous arcs of explosive nature can occur if the circuit is shorted. If the tester is connected across a high energy circuit when set to a low resistance range, a current range, or any other low impedance range, an explosive short can result.

Special equipment designed for use with these circuits is available. Contact a qualified person for assistance before attempting to make measurements on any high energy circuit.

SAFETY IS NO ACCIDENT

TABLE OF CONTENTS

Page

Specifications 3

Warranty 4

General Description 5

Operation

- Measuring DC Volts 6
- Measuring AC Volts 8
- Measuring DC Resistance 10
- Measuring DC Current 12
- Measuring Output Volts (DB) 14
- Operation Chart 16-17
- Measuring Capacity 18

Additional Measurements

- Measuring Kilovolts 20
- Measuring High DC Current 21

Accessories 21

- AC Current Measuring Adapter 22

Additional Applications 24

- Maintenance 27
- Parts Location 28
- Replaceable Parts 29
- Circuit Diagram 30

Data

- EIA Condenser Color Code 31
- DB Graph 32
- DB Chart 33
- EIA Speaker Color Code 33
- EIA Wiring Color Code 33
- EIA Transformer Color Code 34
- EIA Resistor Color Code 34

Printed in U. S. A. **Part No. 84-183F**

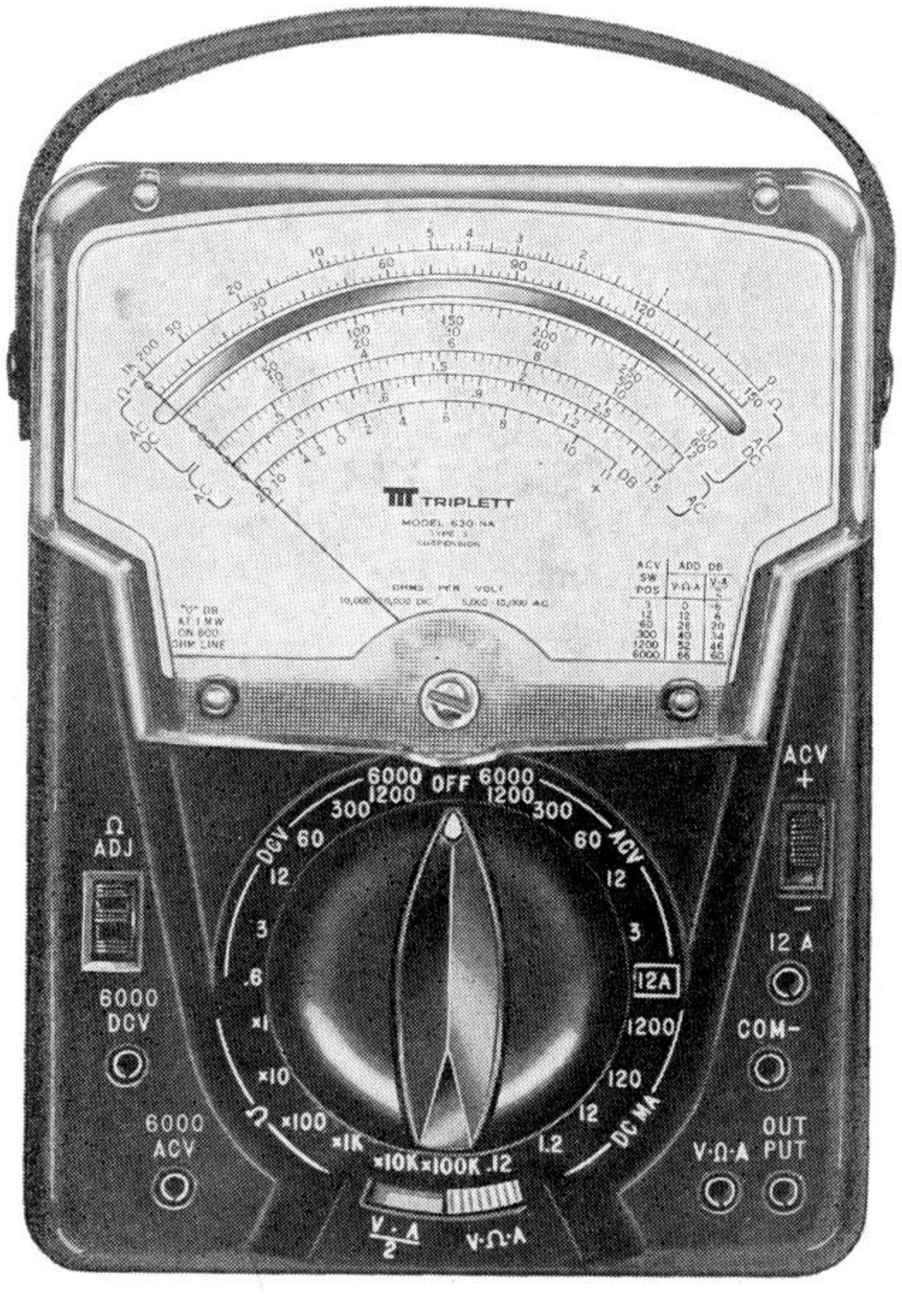

Model 630-NA Type 3

RANGES

16—D. C. VOLTS
0-0.240-0.6-3-12-60-300-1200-6000 at 10,000 Ohms/Volt except 0.240 range
0-0.120-0.3-1.5-6-30-150-600-3000 at 20,000 Ohms/Volt except 0.120 range

12—A. C. VOLTS
0-3-12-60-300-1200-6000 at 5,000 Ohms/Volt
0-1.5-6-30-150-600-3000 at 10,000 Ohms/Volt

8—DB —20 to +45

3—D. C. MICROAMPERES
0-60-600 at 120 M. V. 0-120 at 240 M. V.

7—D. C. MILLIAMPERES
0-6-60-600 at 120 M. V. 0-1.2-12-120-1200 at 240 M. V.

2—D. C. AMPERES 0-6 at 120 M. V. 0-12 at 240 M. V.

3—OHMS 0-1K-10K-100K (4.4-44-440 at center scale)

3—MEGOHMS
0-1-10-100 (4400-44,000-440,000 Ohms center scale)

12—OUTPUT On AC Volt ranges to 1200 V.

GENERAL DESCRIPTION

Accuracy ±1½% on all DC ranges except 3000 and 6000 volt ranges which are ±3½%. ±3% on all AC ranges (on 60 cps sine wave) except 3000 and 6000 volt ranges which are ±5%. ±1½% of DC scale with full battery on ohms. All accuracies are per cent of full scale at 77° F. For greatest accuracy, the instrument should be used in the horizontal position in the upper ½ of the scale.

Frequency Response AC Volts through 300 are compensated from 35 Hz to 20 KHz.

Meter Protection Meter movement protected against heavy overload by use of germanium diodes.

Scale 4.5″ long. AC and DC use same single scale with exception of 1.5 and 3 Volt AC. The single scale is made possible by the high efficiency of the rectifier. Mirror used to eliminate parallax.

Batteries packed separately. See page 27 for installation.

Test Leads One red and one black lead supplied, each 48″ long. Two push-on type alligator clips supplied. Banana type plug for low resistance contact.

Accessories Four rubber feet are supplied to fit into four holes provided in the rear of the tester case.

Size 3-11/32″ x 5½″ x 7½″. **Weight** Approx. 4 lbs.

TRIPLETT WARRANTY AND CONDITIONS OF SALE

The Triplett Corporation warrants instruments manufactured by it to be free from defective material or factory workmanship and agrees to repair or replace such instruments which under normal use and service, disclose the defect to be the fault of our manufacturing. Our obligation under this warranty is limited to repairing or replacing any instrument or test equipment which proves to be defective, when returned to us transportation prepaid within one (1) year from date of original purchase.

This warranty does not apply to any of our products which have been repaired or altered by unauthorized persons or service stations in any way so as, in our judgment, to injure their stability or reliability or which have been subject to misuse, negligence or accident or which have had the serial number altered, effaced, or removed. Neither does this warranty apply to any of our products which have been connected, installed, or adjusted otherwise than in accordance with the instructions furnished by us. Accessories including all vacuum tubes and batteries not of our manufacture used with this product are not covered by this warranty.

The Triplett Corporation reserves the right to discontinue models at any time, or change specifications or design, without notice and without incurring any obligation.

Upon acceptance of the material covered by this invoice the purchaser agrees to assume all liability for any damages and bodily injury which may result from the use or misuse of the material by the purchaser, his employees, or others, and that the Triplett Corporation shall incur no liability for direct or consequential damage of any kind.

Parts will be made available for a maximum period of five (5) years after the manufacture of this equipment has been discontinued. Parts include all materials, charts, instructions, diagrams, accessories, et cetera, which were furnished in the standard or special models.

This warranty and conditions of sale are in lieu of all others expressed or implied and no representative or person is authorized to assume for us any other liability in connection with the sale of our products.

The Triplett Corporation

Bluffton, Ohio 45817

GENERAL DESCRIPTION AND FAMILIARIZATION

The model 630-NA is a combination multi-range measuring instrument offering several functions heretofore unavailable in the conventional Volt-Ohm-Milliammeter. This instrument was designed for those who require better accuracy, measurements over a multiplicity of ranges and frequencies together with greater dependability and simplicity of operations. The following notes may be helpful in understanding some of the new functions of this instrument.

For greater accuracy it is usually best to select a range such that the meter will read in the upper half of the scale. On the model 630-NA, all voltage and current ranges can be split in half by a simple slide switch located below the range knob, thus permitting best scale utilization. Splitting the range also changes the meter sensitivity so that loading effects in sensitive circuits can be observed. In these instances, the actual meter reading may differ when the range is split due to circuit loading. These readings should therefore be taken at the appropriate meter sensitivity.

The model 630-NA incorporates special germanium diodes to prevent damage to the meter movement on accidental overloads. Since most resistors will withstand quite severe instantaneous overloads, it is usually the meter movement that is damaged on overload in conventional multi-meters. Overloads of 1000 times have been applied to the meter movement of the model 630-NA without affecting accuracy.

Compensation of the AC voltage ranges over the audio range provides a new function for this type instrument. At the extreme high frequencies, some variation is to be expected by location of the test leads. Generally it is suggested the leads be kept as far from the chassis and high frequencies components as possible. Use of the alligator clips to clip the lead to the circuit when possible will avoid hand capacity effects.

Directly above 12A jack is an input reversing switch which enables the operator to reverse polarity of the DC input and ohmmeter output. **Caution — For voltages exceeding 300 V, remove power before reversing polarity switch.**

High Voltage Power Caution: Where power source exceeds 18 watts do not use for high voltage measurements (1200 volts) or above.

Measuring DC Volts

Rotate the selector switch to the appropriate range for DC volts. Always start with the highest range if in doubt as to the approximate voltage. In choosing ranges, endeavor to have the readings fall in the upper, or right hand, half of the scale for greatest accuracy.

Plug the black test lead into the "COM" jack and the red lead into the V-Ω-A jack as shown on page 7.

CAUTION on DC Volts do not measure DC voltages having an AC component greater than 450 volts peak. Insulation is tested to withstand a maximum of 1650 rms volts.

Connect the test prods ACROSS the voltage source. The red lead is positive. Where polarity is difficult to determine, the meter may read backwards. No damage will be done if this occurs. Simply reverse the polarity with the switch.

All DC ranges are read on the two black center scales; one directly above the mirror, the other just below the mirror.

With Slide Switch In V-Ω-A Position:

The full scale reading of the instrument is identical to that indicated by the large range switch knob. Thus with the range switch knob at 3 note that the 3 volt range is read on the 300 volt scale simply by dropping two zeros (i. e. dividing by 100). Other ranges are read similarly by adding or omitting zeros as required. The meter sensitivity is 10,000 ohms per volt with slide switch in V-Ω-A position.

With Slide Switch In $\frac{V \cdot A}{2}$ Position:

The instrument will read exactly half of the value indicated by the large range switch knob. Thus with the range knob set at 300, the meter actually will read 150. The scale immediately above the mirror is used for 0-150 volts. With the range switch knob set on 60, the meter will read 30 volts full scale. Read this on the 300 volt scale by dropping one zero (i e. dividing by 10). Other ranges are handled in a similar fashion. The meter sensitivity is 20,000 ohms per volt with the slide switch in $\frac{V \cdot A}{2}$ position.

In order to read D. C. millivolts, the full scale value will be 240 MV with the slide switch to the right and 120 MV with the slide switch to the left, when placing the knob of the selector switch in the .12 or 1.2 D. C. Ma ranges for either of the MV readings.

For handy operation chart see pages 16 and 17

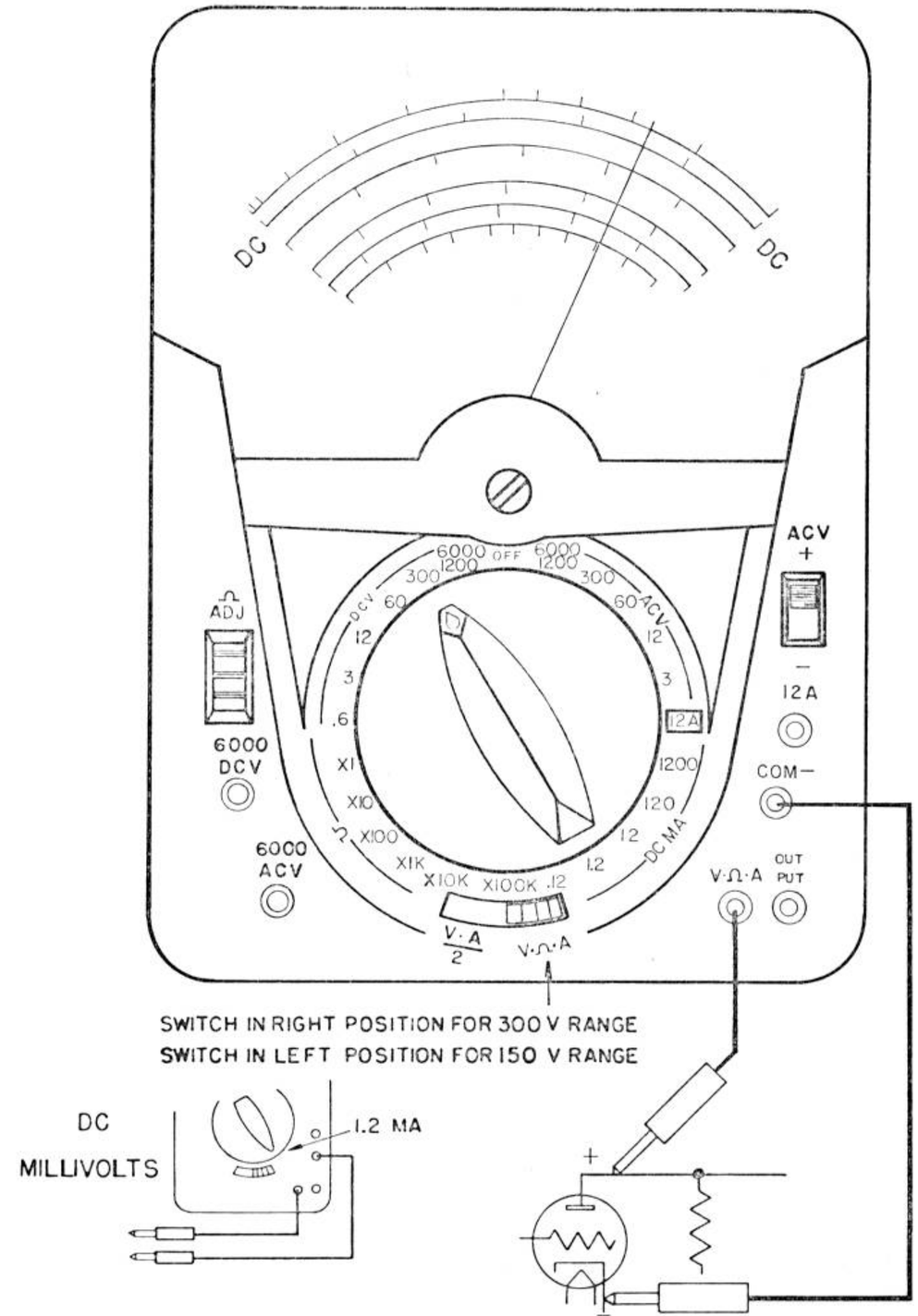

CAUTION: For maximum safety do not handle tester or leads when connected to high voltages. Make certain that no condensers are charged by a high voltage.

Measuring AC Volts

Set polarity switch to +.

Rotate the selector switch to the appropriate range for AC volts. Always start with the highest range if in doubt as to the approximate voltage.

In choosing ranges, endeavor to have the readings fall in the upper, or right hand, half of the scale for greatest accuracy.

Plug the black test lead into the "COM" jack and the red lead into the V-Ω-A jack as shown on page 9.

The AC range up to and including 300 volts is compensated for frequencies from 35 Hz to 20 KHz. Over this range an additional 5% accuracy should be allowed, primarily for the higher ranges and frequencies. The lower frequencies will exhibit negligible error.

CAUTION: When measuring up to 6000 volts, set the selector switch on the 6000/1200 range, plug the red lead into the jack marked "6000 ACV" and leave the black lead in the "COM" jack.

Connect the test probes ACROSS the voltage source.

When measuring audio frequency voltages, connect the common lead to the lowest potential in respect to ground.

All AC ranges are read on the two black center scales except 3V and 1.5V. For greater accuracy two separate red scales have been provided to read 3V-AC and 1.5V-AC.

With Slide Switch In V-Ω-A Position:

The full scale reading of the instrument is identical to that indicated by the large range switch knob. Thus with the range switch knob at 1200, note that 1200 volts is read on the 12 volt scale by adding two zeros (multiplying your reading by 100). There are scales provided for 1.5, 3, 12, 60, 150 and 300. Other ranges are read similarly by adding or omitting zeros as required.

The meter sensitivity is 5000 ohms per volt with slide switch in V-Ω-A position.

With Slide Switch In $\frac{V \cdot A}{2}$ Position:

The instrument will read exactly half of the value indicated by the large range switch knob. Thus with the range knob set at 300, the meter actually will read 150. The scale immediately above the mirror is used for 0-150 volts. With the range switch knob set on 60 the meter will read 30 volt full scale. Read this on the 300 volt scale by dropping one zero (i. e. dividing by 10). Other ranges are handled in a similar fashion.

The meter sensitivity is 10,000 ohms per volt with the switch in this posiiton.

CAUTION For maximum safety do not handle tester or leads when connected to high voltages.

For handy operation chart see pages 16 and 17

Measuring AC Volts

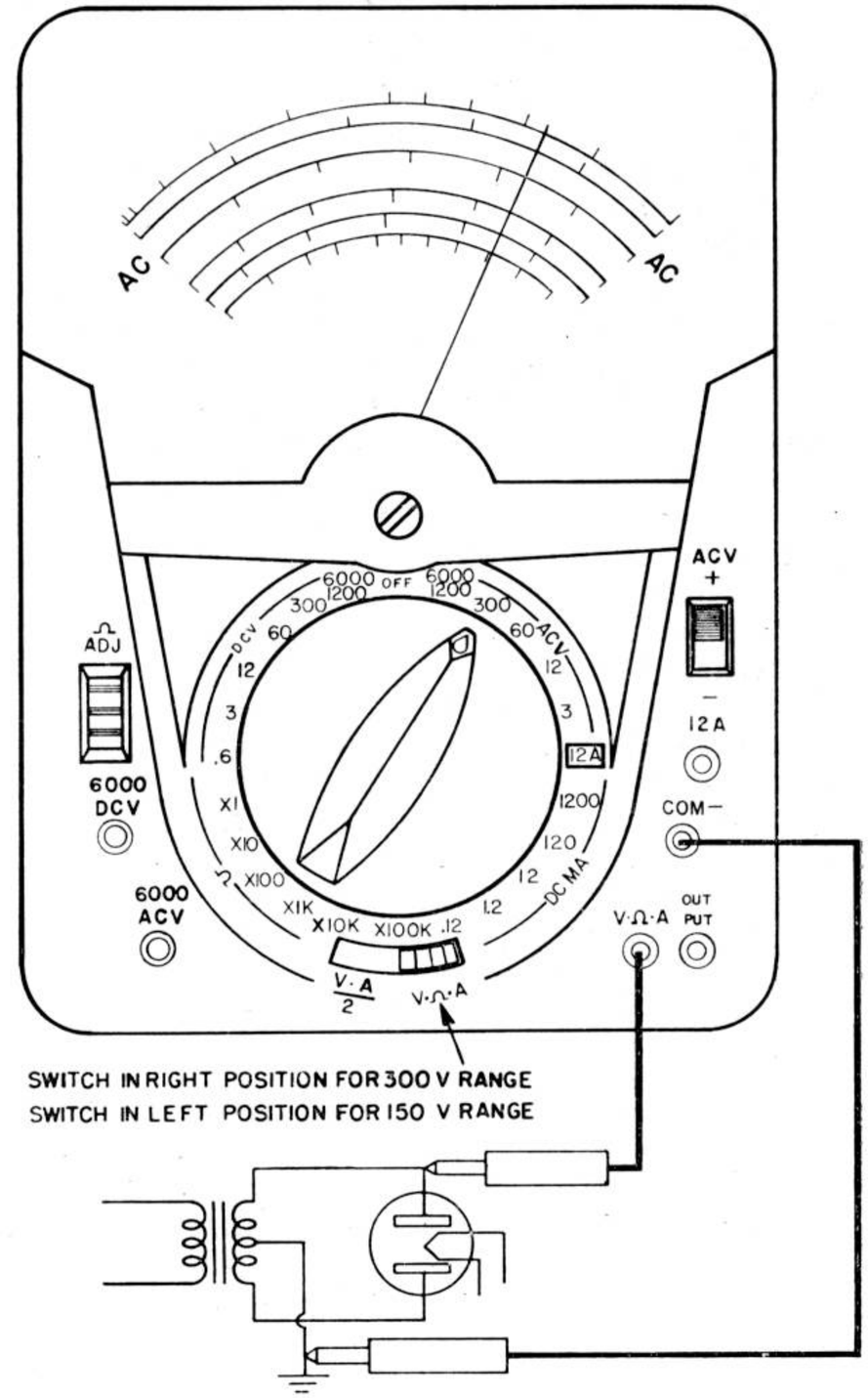

Measuring DC Resistance

Rotate the selector switch to the appropriate range for ohms determined from the following chart:

To read ohms the slide switch must be in the right or V-Ω-A position. The polarity reversing switch on + position delivers + voltage on V-Ω-A jack, reversing the switch reverses this voltage which makes it particularly useful in the checking of diodes.

Plug the black test leads into the "COM" jack and the red lead into the V-Ω-A jack as shown on the opposite page.

Short the test probes together and adjust the Ω-ADJ control until the meter pointer reads 0 on top red ohms scale.

Connect the test probes across the resistor as shown. If the resistor is wired in a circuit, disconnect one end of the resistor before taking the reading.

Each time an ohm range is changed, it is well to check the zero setting as outlined in paragraph above.

The basic scale 0-1K (0-1000 ohms) is used for reading all ohm ranges. Simply multiply the scale numbers by 10, 100, 1K, 10K, 100K as indicated by the selector switch setting.

It should be kept in mind that in the measurement of resistance a current is passed through the unknown resistor. Generally this current is so small as to be negligible. However, on the XI range fairly high current is employed.

OHMMETER RANGES — MAX VOLTAGE (EM) — IN VOLTS

(Note: — Max Power Transfer occurs when Load = the Center Scale R Value)
Max Short Circuit Current (IM) in Milliamps
Max Power Transfer to Load (PM) in Milliwatts

630-NA	X-1	X-10	X-100	X-1K	X-10K	X-100K
EM	1.6	1.6	1.6	1.6	34	34
IM	364	36.4	3.64	.364	.773	.0773
PM	150	15.0	1.5	.15	6.55	.655

Since the scale of an ohmmeter is non-linear, the accuracy of the reading cannot be expressed as a per cent of full scale. Ohmmeter accuracy is generally referred to a linear scale such as the DC volt scale. Thus ±3% ohmmeter accuracy means an allowable ± 1.8 division on the 60 division DC scale. For example 2 ohms could read from about 1.75 to 2.3 ohms and be within tolerance.

For handy operation chart see pages 16 and 17

Measuring DC Resistance

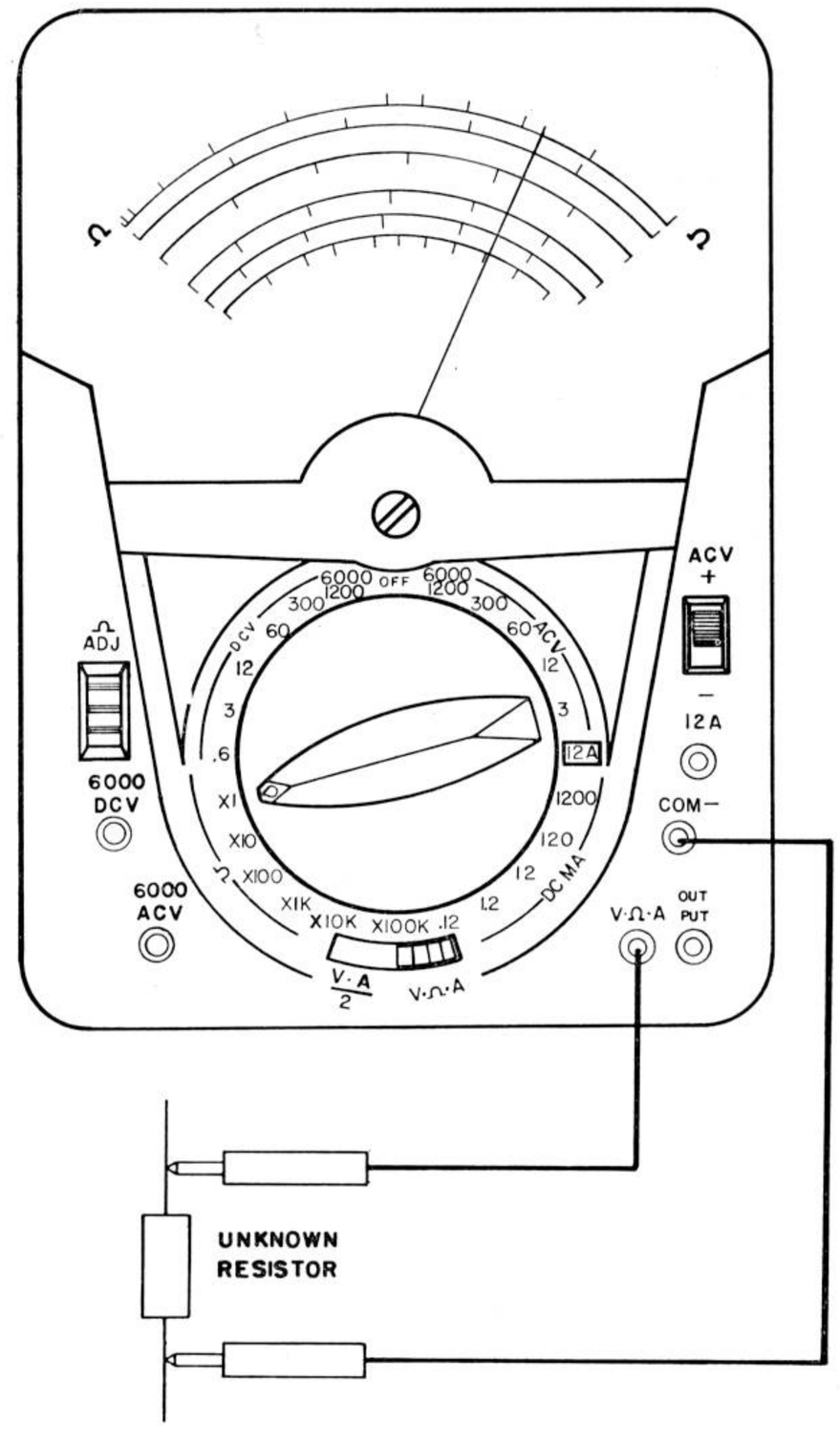

Measuring DC Current

Rotate the selector switch to the appropriate range for DC current. Always start with the highest range if in doubt as to the approximate current.

In choosing ranges, endeavor to have the readings fall in the upper, or right hand, half of the scale for greatest accuracy.

Plug the black test probe into the "COM" jack and the red probe into the V-Ω-A as shown on opposite page.

NOTE: To read 12 DC Amps (or 6 DC Amps on VA/2) test leads must be placed in "COM" and "12 A" jacks.

Connect the test probes in series with the circuit to be measured. Do not test directly across any potential circuits as this may burn out the shunt. The red lead is positive. Where polarity is difficult to determine, the meter may read backwards. No damage will be done if this occurs. Simply reverse the polarity. The polarity reversing switch usable on all ranges except 12A which must be on + position.

With Slide Switch in V-Ω-A Position

The full scale reading of the instrument is identical to that indicated by the large range switch knob. Thus with the range switch knob at 120 note that the 0-120 Milliamperes is read on the 12 Milliampere scale simply by adding one zero (or multiply by 10). Other ranges are read similarly by adding or omitting zeros as required.

With Slide Switch In $\frac{V \cdot A}{2}$ Position:

The instrument will read exactly half of the value indicated by the large range switch knob. Thus with the range knob set at 120 the meter actually will read 60 Milliamperes.

Other ranges are handled in a similar fashion.

CAUTION: Turn off the power before connecting the meter to the circuit. Do not handle the tester or leads in high voltage circuits.

In using the 60 microampere range, the meter reading may differ from actual calculations. This is sometimes caused in low current circuits by a slight leakage of voltage due to moisture. Other times a slight potential is generated by soldering or joining dissimilar metals. Even the proximity of fumes or liquid acids and alkalies may react with the metal parts of the circuit and generate slight current. The fingers should not be permitted to touch the metal parts of the probes or circuit, as body resistance can also upset some circuits.

For handy operation chart see pages 16 and 17

Measuring DC Current

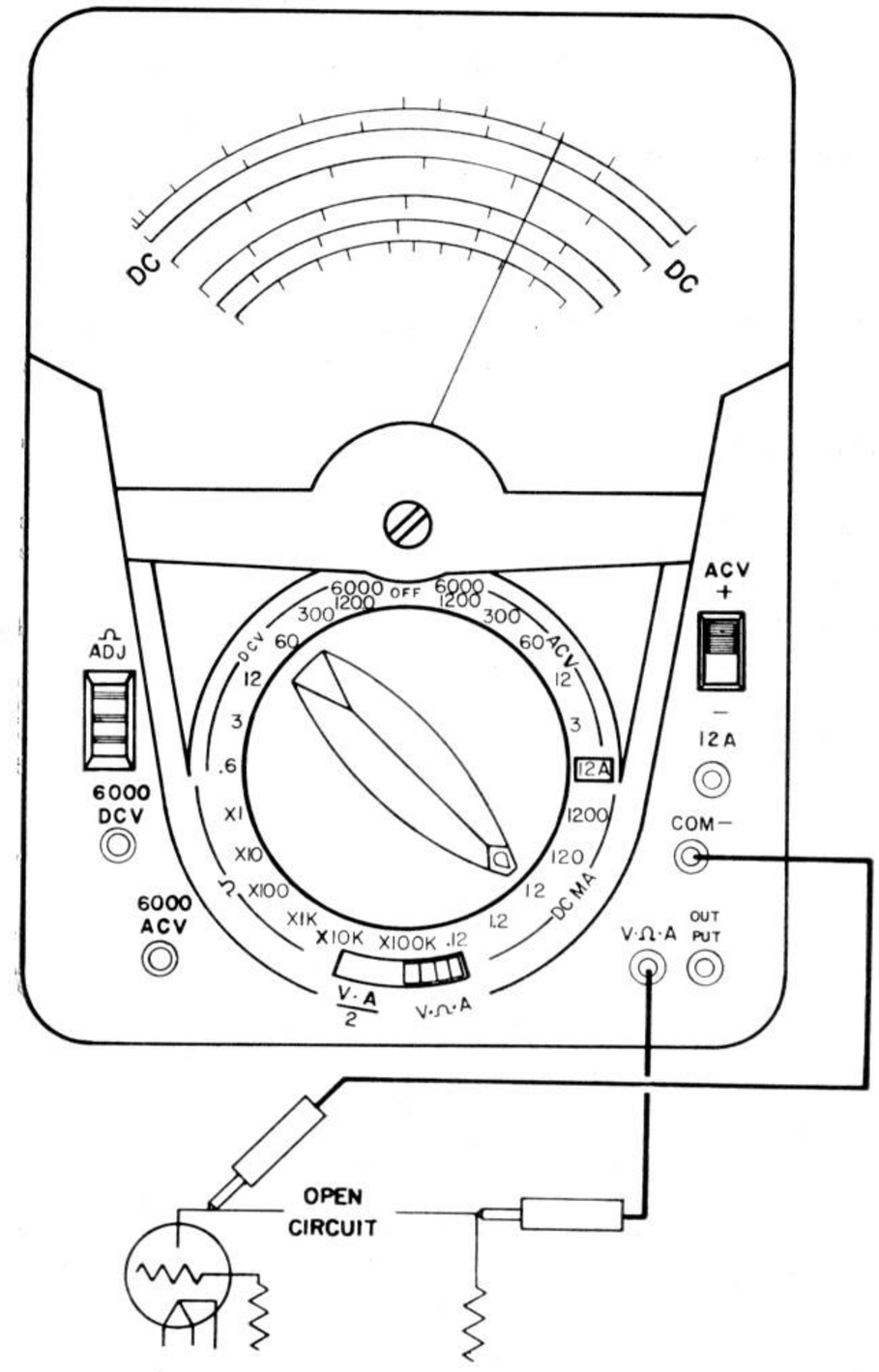

Measuring Output Volts

Output voltage is the AC part of a combined AC and DC voltage. Such a voltage is usually found in amplifier circuits ,but it may be found in other circuits. To measure output voltage, the DC part of the combined voltage must be removed or "Blocked." This is done by inserting a capacitor in series with the AC voltage section of the VOM. The Model 630-NA has a .1μfd, 400 VDC capacitor between the OUTPUT and V-Ω-A jacks to do this.

Rotate the selector switch to the appropriate ACV range and set the polarity switch to ACV.

Plug the test leads into the OUTPUT and COM— jacks.

Connect the test probes across the voltage source.

Read voltage on the Red AC scales. Use the 0-3 scale for the 0-3 ACV range only.

DO NOT USE THE OUTPUT range in circuits where the sum of the DC voltage and the peak AC voltage is greater than 400 volts.

The impedance of the capacitor is generally insignificant at audio frequencies. However, it may cause the meter to read low at low frequencies. Its effect should be considered in critical low frequency measurements.

WHEN THE VOLTAGE BEING MEASURED IS AC with no DC present, the standard AC voltage measurement procedure should be used.

Measuring Decibels (dB)

The decibel is a unit that expresses the ratio of power levels. It is mathematically derived to reduce multiplication and division to addition and subtraction, respectively, (e.g. — 10 dB represents multiplication by 10, 20 dB — 100, 30 dB — 1000). The decibel roughly approximates human hearing ratios. For this reason, it is commonly used in audio and telephone measurements.

Because the decibel represents a ratio, there is a reference level. The Model 630-NA reference level for 0 dB is 1 milliwatt into a 600 ohm load (.775 ACV across 600 ohms). Measurements made across loads other than 600 ohms are relative measurements. (See page 32 for conversion).

To measure decibels, connect the Model 630-NA the same as for measuring AC voltage (or OUTPUT voltage, if there is DC voltage present). But, read the dB scale instead of the voltage scales. A chart on the dial shows the dB values to be added to the reading for the different voltage ranges. (e.g. — When the selector switch is set to the 60 VAC position, add 26 dB to the indicated value). As explained above, addition of dB represents multiplication of power (or voltage).

When measuring AC volts of high frequency such as 15,000 to 20,000 cycles it is best to clip the leads to the voltage point under test. Hand capacity can affect the voltage reading at high frequency.

For handy operation chart see pages 16 and 17

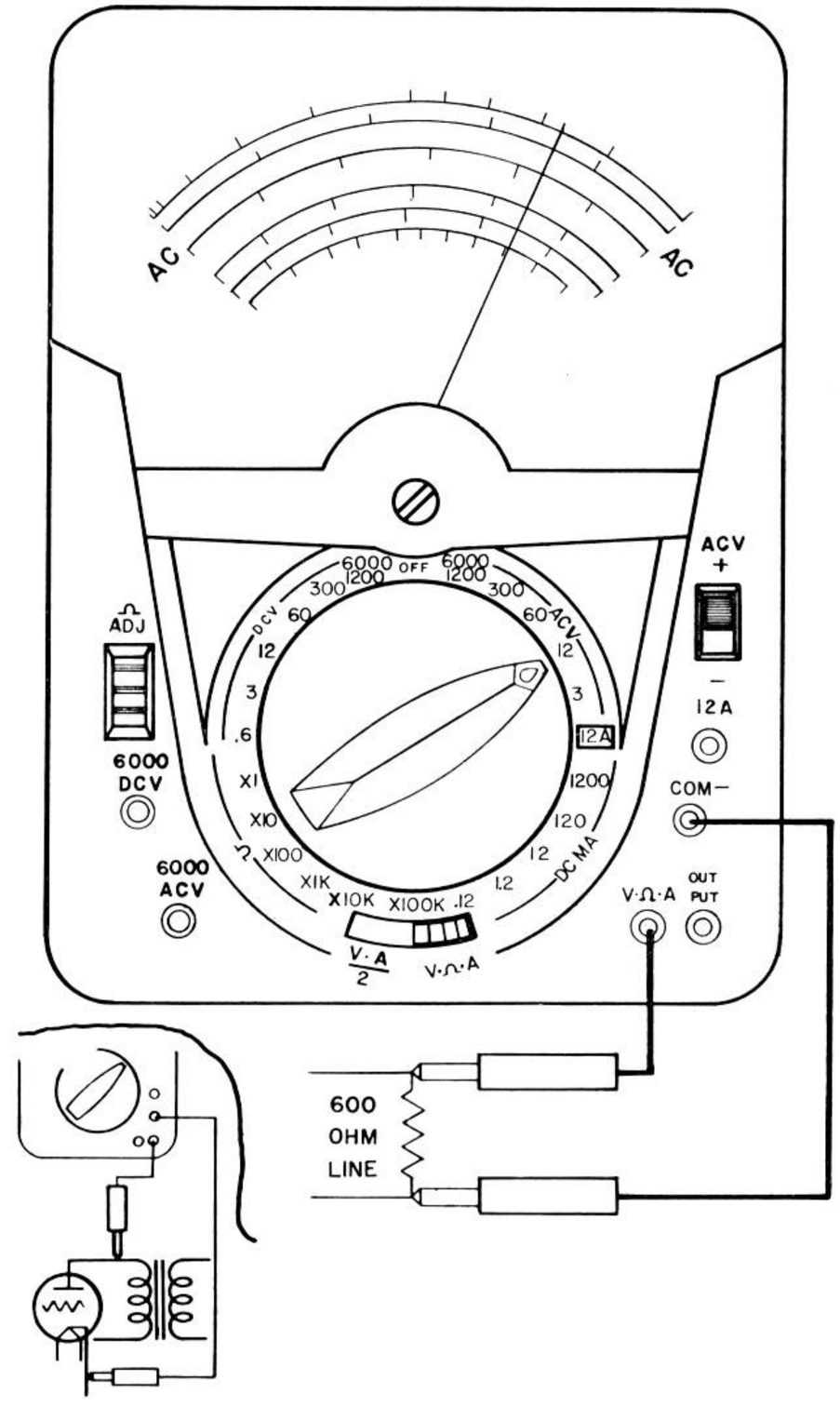

To MEASURE	SET SELECTOR SWITCH TO	SET SLIDE SWITCH	CONNECT TEST LEADS IN JACK MARKED	READ ON SCALE	MULTIPLY OR DIVIDE SCALES
DC VOLTS					
.12 (120 MV.)	.12 MA	V-A÷2 Position	V-Ω-A & COM	12	÷100
.24 (240 MV.)	.12 MA	V-Ω-A Position	V-Ω-A & COM	12	÷50
.3	.6 DCV	V-A÷2 Position	V-Ω-A & COM	300	÷1000
.6	.6 DCV	V-Ω-A Position	V-Ω-A & COM	60	÷100
1.5	3 DCV	V-A÷2 Position	V-Ω-A & COM	150	÷100
3	3 DCV	V-Ω-A Position	V-Ω-A & COM	300	÷100
6	12 DCV	V-A÷2 Position	V-Ω-A & COM	60	÷10
12	12 DCV	V-Ω-A Position	V-Ω-A & COM	12	Read Direct
30	60 DCV	V-A÷2 Position	V-Ω-A & COM	300	÷10
60	60 DCV	V-Ω-A Position	V-Ω-A & COM	60	Read Direct
150	300 DCV	V-A÷2 Position	V-Ω-A & COM	150	Read Direct
300	300 DCV	V-Ω-A Position	V-Ω-A & COM	300	Read Direct
600	1200 DCV	V-A÷2 Position	V-Ω-A & COM	60	×10
1200	1200 DCV	V-Ω-A Position	V-Ω-A & COM	12	×100
3000	6000 DCV	V-A÷2 Position	6000 DC & COM	300	×10
6000	6000 DCV	V-Ω-A Position	6000 DC & COM	60	×100
AC VOLTS					
1.5	3 ACV	V-A÷2 Position	V-Ω-A & COM	1.5	Read Direct
3	3 ACV	V-Ω-A Position	V-Ω-A & COM	3	Read Direct
6	12 ACV	V-A÷2 Position	V-Ω-A & COM	60	÷10
12	12 ACV	V-Ω-A Position	V-Ω-A & COM	12	Read Direct
30	60 ACV	V-A÷2 Position	V-Ω-A & COM	300	÷10
60	60 ACV	V-Ω-A Position	V-Ω-A & COM	60	Read Direct
150	300 ACV	V-A÷2 Position	V-Ω-A & COM	150	Read Direct
300	300 ACV	V-Ω-A Position	V-Ω-A & COM	300	Read Direct
600	1200 ACV	V-A÷2 Position	V-Ω-A & COM	60	×10
1200	1200 ACV	V-Ω-A Position	V-Ω-A & COM	12	×100
3000	6000 ACV	V-A÷2 Position	6000 AC & COM	300	×10
6000	6000 ACV	V-Ω-A Position	6000 AC & COM	60	×100
DC CURRENT					
.06 MA	.12 MA	V-A÷2 Position	V-Ω-A & COM	60	÷1000
.12 MA	.12 MA	V-Ω-A Position	V-Ω-A & COM	12	÷100
.6 MA	1.2 MA	V-A÷2 Position	V-Ω-A & COM	60	÷100
1.2 MA	1.2 MA	V-Ω-A Position	V-Ω-A & COM	12	÷10
6 MA	12 MA	V-A÷2 Position	V-Ω-A & COM	60	÷10
12 MA	12 MA	V-Ω-A Position	V-Ω-A & COM	12	Read Direct
60 MA	120 MA	V-A÷2 Position	V-Ω-A & COM	60	Read Direct
120 MA	120 MA	V-Ω-A Position	V-Ω-A & COM	12	×10
600 MA	1200 MA	V-A÷2 Position	V-Ω-A & COM	60	×10
1200 MA	1200 MA	V-Ω-A Position	V-Ω-A & COM	12	×100
6 Amp.	12 Amp	V-A÷2 Position	12A & COM	60	÷10
12 Amp.	12 Amp	V-Ω-A Position	12A & COM	12	Read Direct
OHMS					
0 to 1,000	×1 OHMS	V-Ω-A Position	V-Ω-A & COM	Red Ohm 0-1000	Read Direct
0 to 10,000	×10 OHMS	V-Ω-A Position	V-Ω-A & COM	Red Ohm 0-1000	×10
0 to 100,000	×100 OHMS	V-Ω-A Position	V-Ω-A & COM	Red Ohm 0-1000	×100
0 to 1,000,000	×1000 OHMS	V-Ω-A Position	V-Ω-A & COM	Red Ohm 0-1000	×1000
0 to 10 Meg.	×10K OHMS	V-Ω-A Position	V-Ω-A & COM	Red Ohm 0-1000	×10,000
0 to 100 Meg.	×100K OHMS	V-Ω-A Position	V-Ω-A & COM	Red Ohm 0-1000	×100,000
DECIBELS					
—20 to +45 (To+ 77 see page 15)	Select AC range according to table on Dial.	V-Ω-A or V-A÷2	V-Ω-A & COM or OUTPUT & COM	DB	Use Table On Dial

OPERATION

Measuring Capacity

Your 630-NA can be used to measure capacity by the arrangement shown on opposite page. For such measurements the tester is set up as an AC voltmeter.

Use the following chart to determine the AC voltage range to use. ALWAYS start with the selector switch on the 300 volt range for if the condenser is shorted, serious damage may result to the meter when on a low range.

To Measure MFD	Set Selector Switch to	Deflection in AC Volts
.002	3 ACV	.45
.004		.83
.006		1.25
.008		1.65
.010		2.10
.020	12 ACV	4.3
.04		7.7
.05		9.7
.08	60 ACV	14.5
.10		17.5
.2		30.0
.4		45.0
.6		57.0
.8	300 ACV	65.0
1.0		75.0
2.0		85.0
5.0		95.0
10.0		100.0

CAUTION: DO NOT ATTEMPT TO USE THIS TEST ON ELECTROLYTIC CONDENSERS.

Measuring Capacity

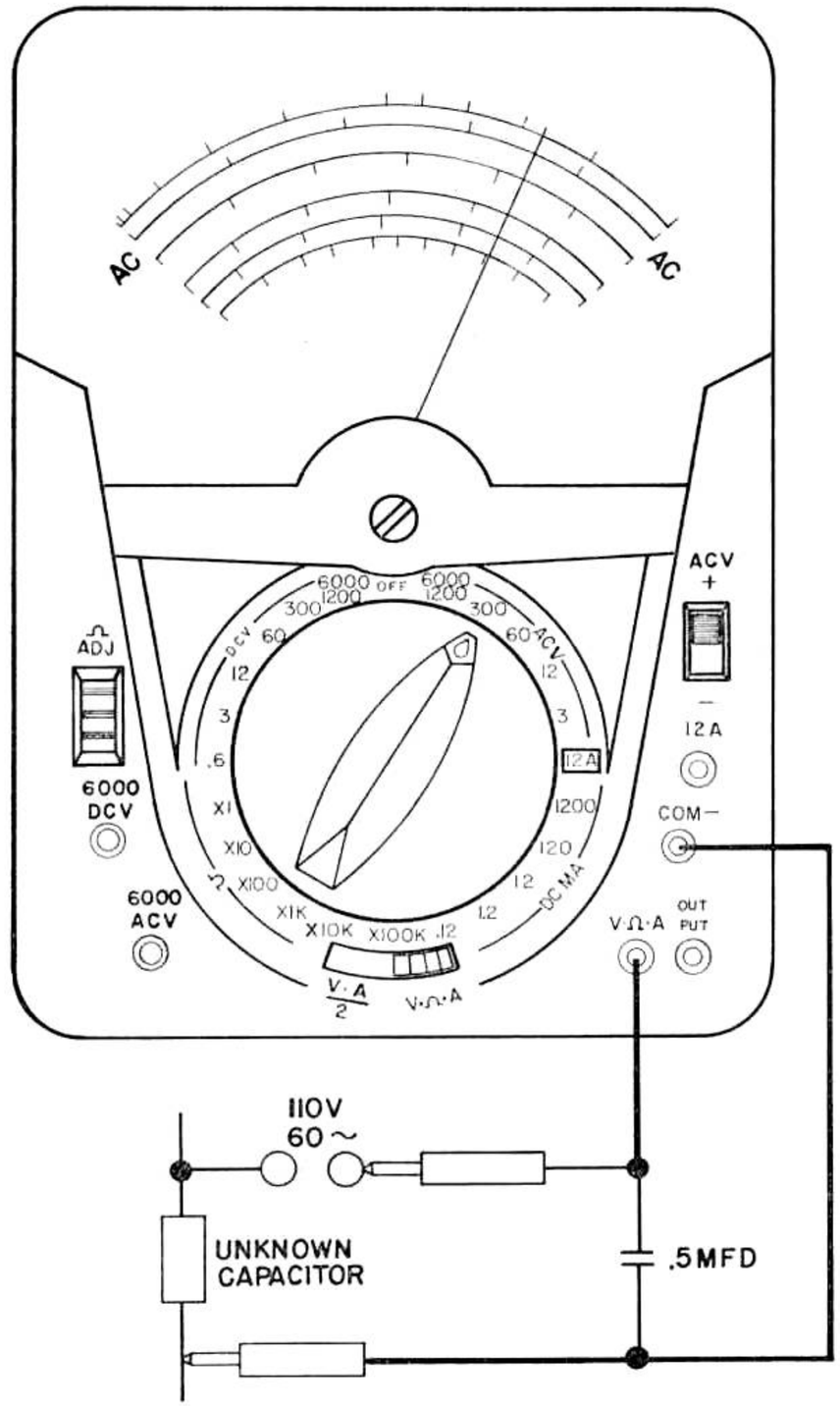

Measuring Kilovolts

For measuring the high voltage employed in television receivers and in other applications, an external probe is available. To use the D. C. Kilovolt probe set the range and slide switches to the positions shown below for the probe you are using. Plug the high voltage probe into the V-Ω-A jack and use the black standard test lead in the "COM" jack.

KV PROBE	MEASURED VOLTAGE	SET RANGE SWITCH ON	SET SLIDE SWITCH AT	READ ON BY	MULTIPLY SCALE
0-30 KV DC	0-30 KV DC	3 V DC	V-Ω-A	300 V	100
0-30 KV DC	0-15 KV DC	3 V DC	V-Ω-A/2	150 V	100
0-30 KV AC	0-30 KV AC	3 V AC	V-Ω-A	3 V AC	10,000
0-30 KV AC	0-15 KV AC	3 V AC	V-Ω-A/2	1.5 V AC	10,000
0-60 KV AC	0-60 KV AC	3 V AC	V-Ω-A	60 V	1,000
0-60 KV AC	0-30 KV AC	3 V AC	V-Ω-A/2	3 V AC	10,000

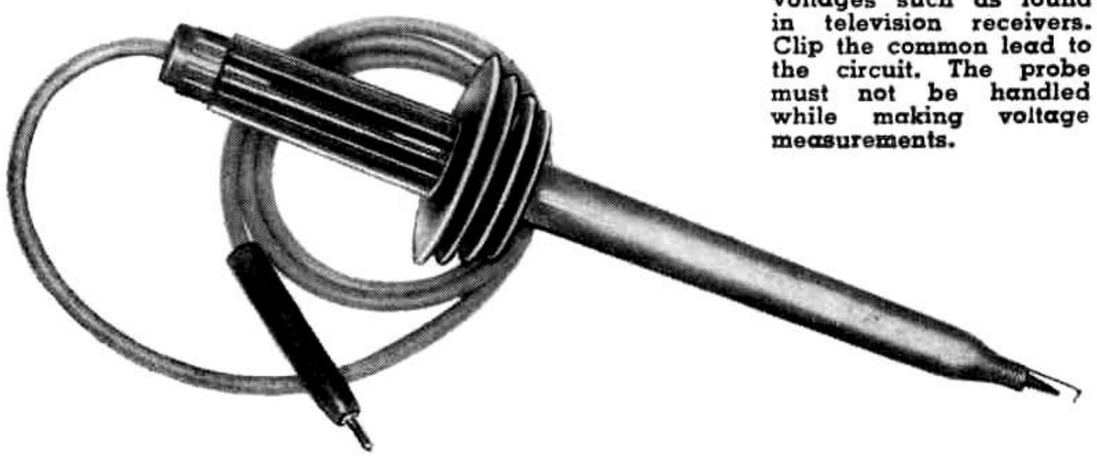

USE EXTREME CAUTION in measuring the high voltages such as found in television receivers. Clip the common lead to the circuit. The probe must not be handled while making voltage measurements.

Measuring High DC Current

External plug-in shunts are available to extend the DC current ranges of your 630-NA from the self-contained 0-12 amps range to 0-30 amps. External portable shunts up to 120 amperes also are available. (See paragraph on accessories.)

Set the 630-NA selector switch to the 12 Ma. position and plug the desired external shunt into the COM and V-Ω-A jacks. Connect the line to be measured to the binding posts on top of the shunts. The external portable shunts are too large to plug into the panel and must be connected to the panel jacks by the leads furnished with the shunts.

Accessories

The following accessories for your 630-NA are available from your distributor:

Item	Part No.
Hi-Voltage probe 0-30 Kv DC & 0-60 Kv AC	T-79-152
Hi-Voltage probe 0-30 Kv AC	T-79-71
Carrying cases	639, 639-N, 639-P
Plug-in external shunt 0-30 DC Amp.	T-91-429
Portable external shunt 0-60 DC Amp.	T-91-430
Portable external shunt 0-120 DC Amp.	T-91-431
Tester Stand (Holds tester at approximately 45° angle while working on bench.)	T-255A-33
Clamp-On Ammeter Adapter Model 10	60-A-211
Lead Assembly No. 611 (used in connection with Model 10)	79-A-160
Line Separator, Model 101 (used in connection with Model 10)	60-A-218

AC CURRENT MEASURING ADAPTER

AC line loads can be checked easily, without breaking the conductors or insulation of the circuit under test, when the Model 10 CLAMP-ON AMMETER ADAPTER (Part No. 60A-211) is used. The Adapter is connected with a No. 611 LEAD ASSEMBLY (Part No. 79A-160). The lever on the side of the Model 10 Adapter is pressed to open the split yoke of the adapter so it can be placed over and closed around the lead or bus bar carrying the current being measured. Readings up to 300 AC amperes can be made.

Fig. 8. Model 10 Clamp-On-Adapter.

THE MODEL 101 LINE SEPARATOR (Part No. 60A-218) is used to divide a circuit using two-conductor cable so one conductor can be encircled by the adapter yoke. The Model 101 is plugged into the AC outlet and the AC cord of the equipment to be measured is plugged into the appropriate socket on the Model 101. The split yoke of the Model 10 Adapter is clipped through the loop in the Model 101 to make the current measurement. Use of the "Divide by 10" and "Divide by 20" sockets on the Model 101 Line Separator makes a convenient and fast method of measuring extremely low AC current.

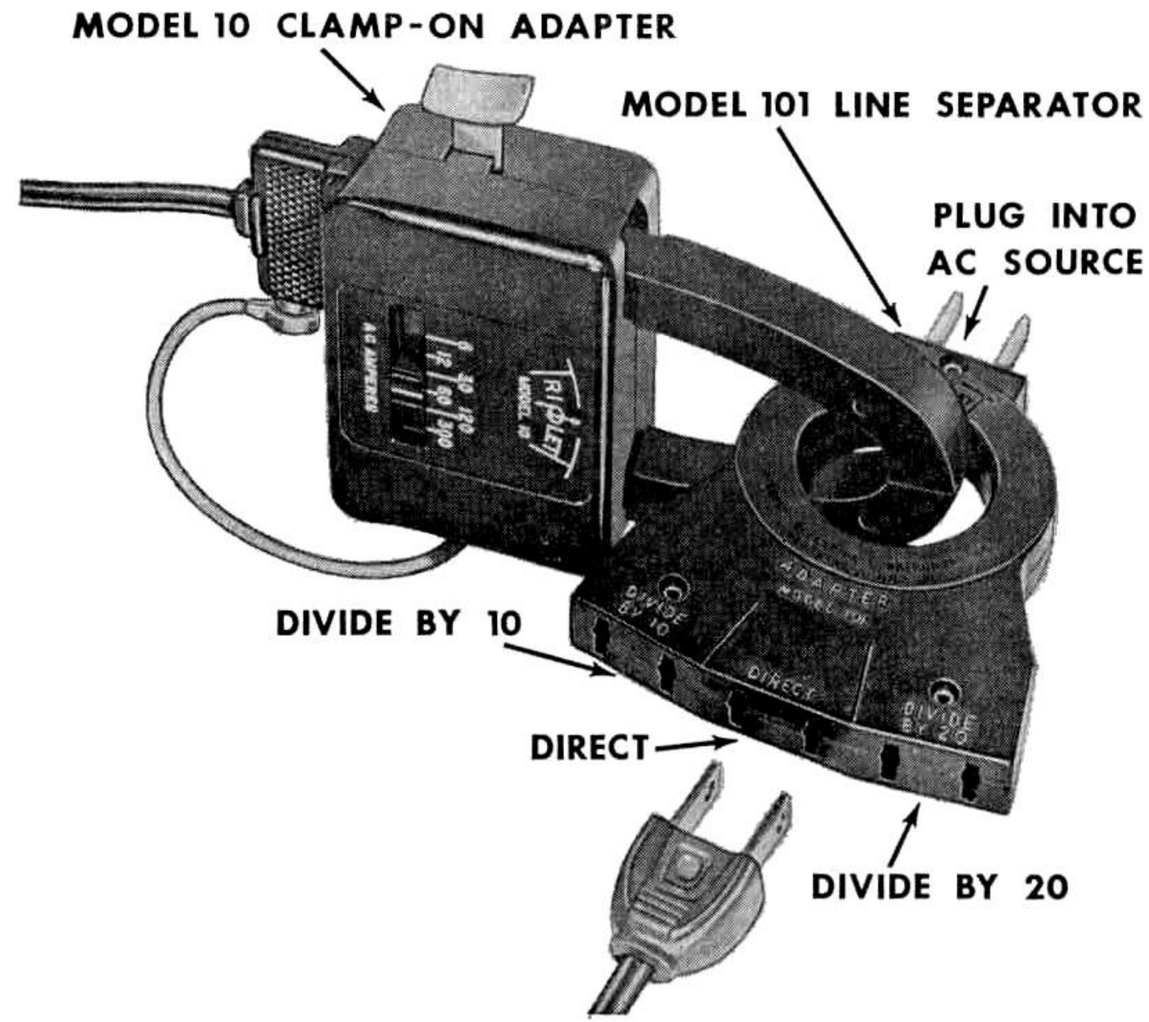

Fig. 9. Model 101 Line Separator.

ADDITIONAL APPLICATIONS

In The Home

When your refrigerator motor fails to "kick out" the starting winding, use the 630-NA to measure the AC line voltage. If the voltage is below 100 volts, notify your power company.

If your electric stove does not seem to heat quickly enough, measure the voltage input to the stove with all burners turned on and again with all burners turned off. If the difference between these two voltages is 10 or 15 volts, the power cable to the stove has defective connections or is not of large enough current carrying capacity.

Blown fuses sometimes do not visibly indicate they are burned out. With your 630-NA, measure the voltage ahead of and behind the fuse. Voltage ahead of the fuse but no voltage following indicates a blown, defective, or loose fuse. Sometimes it is easier to remove the fuse and measure its resistance. This should be substantially zero.

Your 630-NA is handy for locating trouble in desk and floor lamps. Pull the plug from the wall socket and check for a faulty cord, plug, switch, socket, or bulb by measuring resistance on the Ω-X1 range. 100 watt 120 volt bulbs should read 10 to 20 ohms. 50 watt 120 volt bulbs should read 20 to 40 ohms.

For the Radio Man

In addition to all common voltage, current, and resistance measurements used in servicing radios, the high sensitivity of your 630-NA is well adapted to measuring AFC, AVC, bias and FM discriminator voltages.

Measurements of high voltage up to 27,000 volts used in some television receivers for the picture tube can be effected with the special high voltage probe shown on page 20.

Considerable trouble is had with leakage in automobile radio antennas (due to moisture). Your 630-NA with the high ohm range 0-100 meg. is ideal to check this leakage. Disconnect the antenna from the receiver before making this check.

In The Industrial Plant

Your 630-NA will be a big help in checking voltage drop caused by adding that extra machine on the already overloaded line. Correcting this will often save time later when a rush comes and the line "just happens" to burn up.

First measure the voltage at the machine with the machine turned off; then again with the machine in operation. If the voltage is proper with the machine off but low with the machine in operation, the circuit wiring or transformers have too small a capacity. If the voltage is low even with the machine off, the circuit is probably already overloaded and the machine should be wired into another circuit.

Equipment using automatic electric controls can be checked with the 630-NA. Faulty relay or control action is often caused by low voltage applied to the relay or control. This low voltage in turn, may be caused by burned or dirty contacts on the control device. Use the ΩX1 range to check for high or unstable contact resistance.

When a phone on your dial telephone system fails, measure the line current and the voltage to the particular relay in question. If the voltage is proper, measure the contact resistance of the relay contacts using the ΩX1 scale on your 630-NA. If this resistance is over a fraction of an ohm or if the resistance seems to waver, clean and adjust the relay contacts.

In The Garage

Fuses in the automobiles have a tendency to look perfectly good and yet not function due to corrosion under the metal end cap. Measure the voltage ahead and behind the fuse to determine a defective unit. Or remove the fuse and measure its resistance. Anything over a fraction of an ohm is too high.

Checking automobile wiring, light switches, heaters, radios, etc., can be speeded up by simple use of your 630-NA.

In The Laboratory

Your 630-NA is built with all precision, non-aging resistors. The specially designed switch and special banana type plugs insure lasting accuracy. The meter with Taut-Band Suspension and a well designed stable magnet further makes the 630-NA a must for the laboratory.

Special Applications

The unusually high range ohmmeter in your 630-NA permits some indication of condenser leakage resistance. Measure as a resistor, see page 10, using the highest range. A good paper or mica condenser under 1 mfd. will indicate at the 100 Meg. mark or above. If a steady reading (taken after the initial surge required to charge the condenser) of less than 100 megohms is obtained, the condenser probably has defective insulation. Good paper condensers over 1 mfd. may read somewhat less than 100 megohms. Electrolytic condensers, should read above .1 megohm. In checking electrolytic condensers, the black test lead (COM jack) should be connected to the positive terminal of the condenser.

Checks of insulation resistance for motors, generators, telephone cables, power cables, etc., can be made on the high ohmmeter range of your 630-NA. The actual value of resistance may vary from a few megohms to over 100 meg., depending on weather conditions and quality of insulation. The best method, therefore, is to make periodic checks on important cables or equipment and observe the trend in readings. As the readings tend to be lower and lower, it is time to start drying out the equipment or determine the cause of deterioration. Dirt, mice, or foreign matter can sometimes cause excessive leakage.

Audio Specialist

The model 630-NA is the ideal instrument for audio engineering and maintenance. The frequency compensation in this instrument will allow you to read volume level from 35 Hz to 20 KHz.

MAINTENANCE

Battery Replacement

Two batteries are used for the ohmmeter circuits, a 1.5 volt Burgess No. 2 or equivalent and a 30 volt Eveready No. 413 or equivalent.

When the meter pointer can no longer be adjusted to zero (see page 10) ohms on the ΩX1, ΩX10, or ΩX1000 ranges, replace the 1.5 volt battery.

When the meter pointer can no longer be adjusted to zero ohms on the ΩX10,000 and ΩX100,000 range, replace the 30 volt battery.

To replace batteries, remove the four screws in the bottom of the case and lift panel from the case. Remove the old battery and replace with a new one.

Fuse Replacement

A one ampere fuse is incorporated in the ohm circuits for protecting the ohm circuit when it is accidentally placed across high voltage. A spare fuse is attached to unit inside the tester.

Note: This fuse is in series with ohmmeter circuit and is physically mounted on the back of the meter housing.
You are cautioned not to substitute the indicated 3AG Littelfuse for it can disturb the balance of the circuit and read in error.

Cleaning Plastic Window

The plastic window has been treated at the factory to dissipate static charges. If cleaning is required, use cotton dipped in a solution of common household detergent and water. After cleaning, allow the solution to dry without rubbing.

Care

Avoid placing your tester on a bench where machine tools are used or severe vibration is encountered.

If the unit has not been in use for a long period of time, rotating the switch in both directions several times will wipe the contacts clean for good contact.

In use, don't take chances on overloading the resistors or shunts. If in doubt as to the approximate reading always start with the highest range.

Turn the selector switch to OFF when the unit is to be carried. With the selector switch in the OFF position the meter is damped and this will prevent wild swinging of the pointer.

INTERIOR VIEW PARTS LOCATION

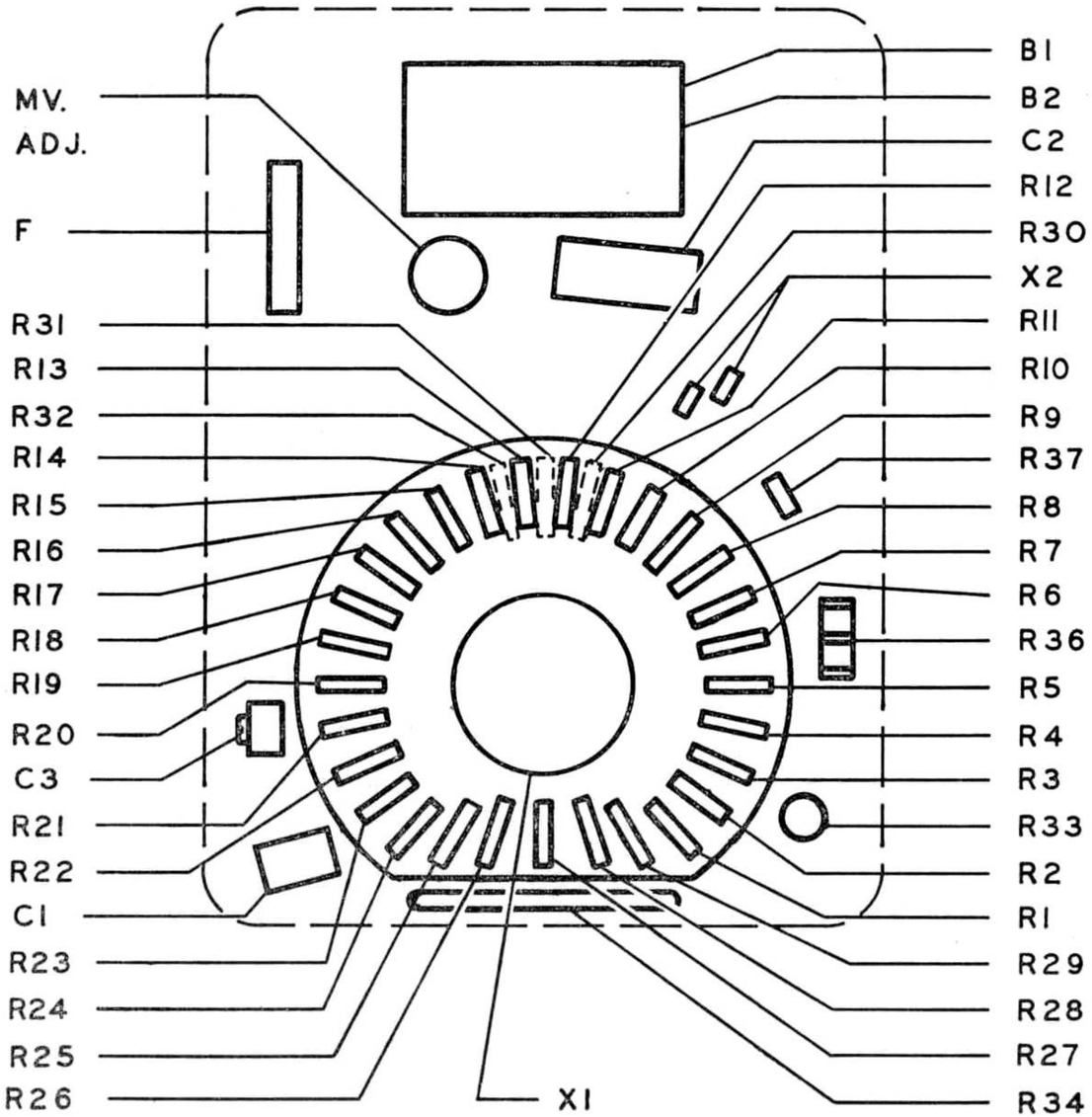

REPAIR OR SERVICE

In the event repair or service is required, please outline the nature of the difficulty. By providing this information, Triplett can supply more efficient service.

REPLACEABLE PARTS 630-NA

REF. NO.	REQ.	NAME	DESCRIPTION	TRIPLETT NO.
R1	1	Resistor	Film type, 218.2 ohm, ±½%	T-15-2567
R2	1	Resistor	Film type, 12K, ±½%, ½W	T-15K-1202UC5
R3	1	Resistor	Film type, 423K, ±½%, ½W	15K-4233UC5
R4	1	Resistor	Film type, 42.3K, ±½%, ½W	15K-4232UC5
R5	1	Resistor	Film type, 732 ohm, ±1%	15K-7320TC5
R6	1	Resistor	Film type, 71 ohm, ±1%	15K-710FTC5
R7	1	Resistor	Wire, 6.5 ohm, ±½%	T-15-4114
R8	1	Resistor	Film type, 14K, ±½%, ½W	15K-1402UC5
R9	1	Resistor	Film type, 1880 ohm, ±½%, ½W	15K-1881UC5
R10	1	Resistor	Film type, 4690 ohm, ±½%, ½W	15K-4691UC5
R11	1	Resistor	Film type, 3600 ohm, ±½%, ½W	15K-3601UC5
R12	1	Resistor	Film type, 24K, ±½%, ½W	15K-2402UC5
R13	1	Resistor	Film type 90K, ±½%, ½W	15K-9002UC5
R14	1	Resistor	Film type, 480K ±½%, ½W	15K-4803UC5
R15	1	Resistor	Film type, 2.4M ±½%, ½W	T-15-2513
R16, R17, R20	3	Resistor	Film type, 4.5M, ±½%, ½W	T-15-1554
R18	1	Resistor	Film type, 4800 ohm, ±½%, ½W, 2½" leads	15K-4801UC5
R19	1	Resistor	Film type, 5230 ohm, ±½%, ½W	15K-5231UC5
R21	1	Resistor	Film type, 1.2M, ±½%, ½W	T-15-1553
R22	1	Resistor	Film type, 240K, ±½% ½W	15K-2403UC5
R23	1	Resistor	Film type, 45K, ±½%, ½W	15K-4502UC5
R24	1	Resistor	Film type, 715 ohm	15K-7150TC5
R25	1	Resistor	Film type, 2400 ohm ±½%, ½W	15K-2401UC5
R26	1	Resistor	Film type, 9600 ohm, ±½%, ½W	15K-9601UC5
R27	1	Resistor	Wire, .1972 ohm, ±¼%	T-15-2371
R28	1	Resistor	Wire, 2 ohm, ±¼%	T-15-2372
R29	1	Resistor	Wire, 20.17 ohm, ±¼%	T-15-2373
R30	1	Resistor	Film, 377 ohm, ±½%, ½W	15K-3770UC5
R31	1	Resistor	Film type, 37.2 ohm, ±½%, ½W	T-15-4115
R32	1	Resistor	Wire, 3.7 ohm, ±¼%	T-15-3224
R33	1	Resistor Assem.	Film type, 24M, ±1%, 2W, No. 18 lead	T-15-1226
R34	1	Resistor	Film type, 24M, ±1%, 2W	T-15-1226
R35	1	Shunt	12 Amp	T-90A-378
R36	1	Resistor	Variable, 20K	T-16-31
R37	1	Resistor	Composition, 3600 ohm, ±5%, ½W	15R-362JC
C1	1	Capacitor	0.1 mfd. 400V, Midget Sprague No. 68P21	T-43-69
C2	1	Capacitor	1 mfd., 200V, Aerovox P-82	T-43-176
C3	1	Capacitor	Arco No. 464, 20-280 pf	43-250
B1	1	Battery	1.5 Burgess #2, Flash lite "D" cell or NEDA No. 813	available locally
B2	1	Battery	30V Burgess, U20E, Eveready No. 413 or NEDA No. 210	
M	1	Meter	37.5 Micro-amps, 120 Millivolts	52-4039
X	1	Rectifier	Assembly	T-2250A-66
S1, S2	1	Switch	4 deck, 24 position without res.	22A-456
	1	Knob	Molded, Selector switch (with clip)	34B-62
	1	Knob	Molded, slide switch	T-34B-47
	1	Clip	Tinnerman, knob retaining	2451-51
	1 pr.	Leads	Banana type	T-79-127
	1	Case	Bakelite, with handle	T-10-784
	1	Front	Clear plastic with zero adj.	10-2148
	1	Ball	Bearing ⅛D, Slide Switch	10779
	1	Spring	Helical, Ball retaining	T-42-148
	1	Plate	Slide type, Knob retaining	10756A
	5	Contact	Jack	8944
	1	Clip	Shunt retaining	T-2451-6
S1 S2	1	Switch	4 deck, 24 position, with res.	22-560
SW3	1	Switch	Polarity Reversing, DPDT Slide	22-546
F1	2	Fuse	1 amp. Littelfuse 3AG, 312001	3207-15

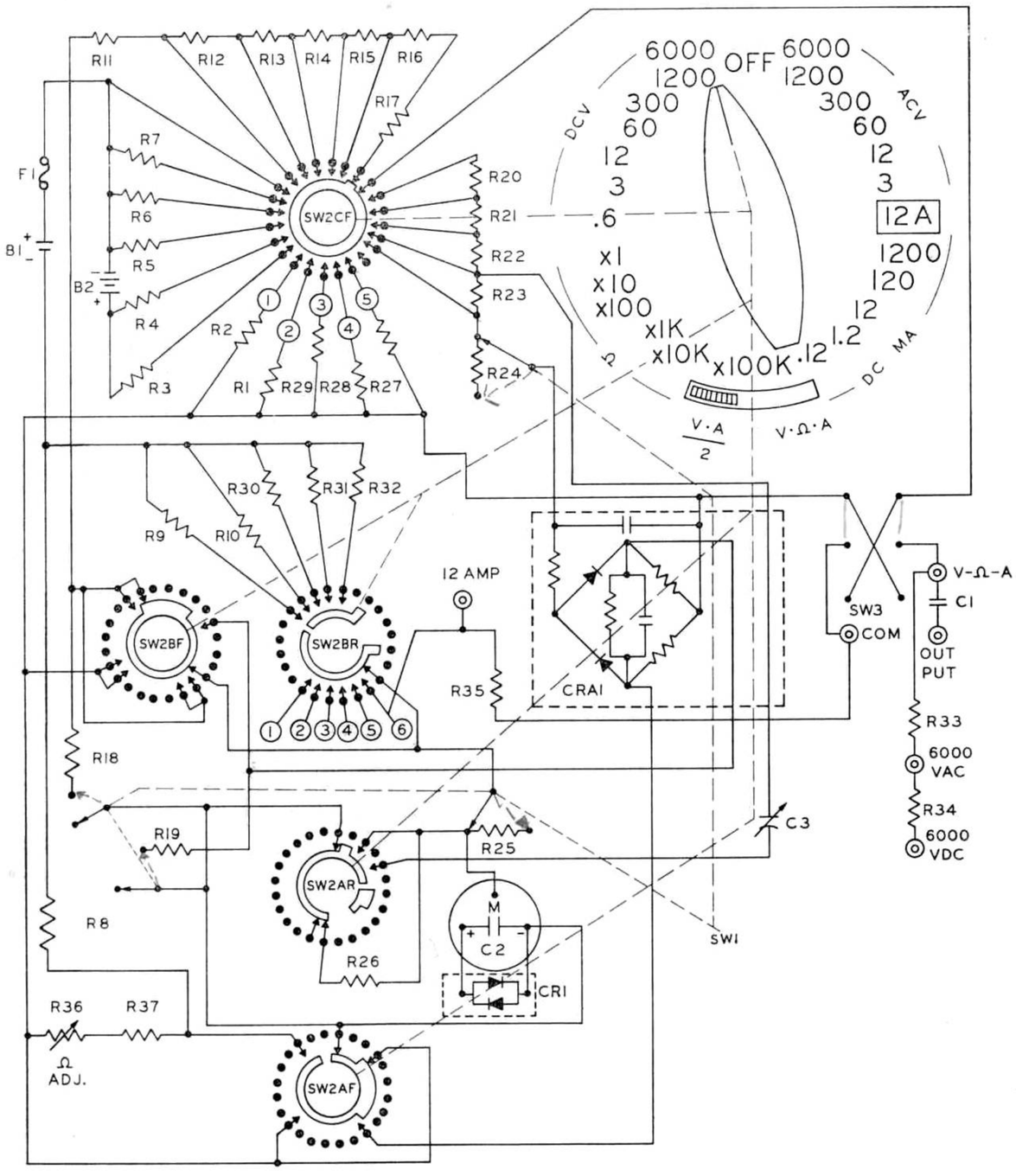

EIA MICA CONDENSER COLOR CODE

	MOLDED PAPER		MOLDED MICA		CERAMIC	
Color	Multiplier	Tolerance	Multiplier	Tolerance	Multiplier	Tolerance
Black	1	20%	1	20%	1	20% or 2.0μμfd.*
Brown	10		10		10	1%
Red	100		100	20% EIA	100	2%
Orange	1000		1000	3% EIA	1000	2.5% EIA
Yellow	10,000	5%	10,000		10,000	
Green				5% EIA		5% or 0.5μμfd.*
Blue						
Violet						
Gray					0.01	0.25μμfd.*
White		10%			0.1	10% or 1.0μμfd.*
Gold	0.1	5%	0.1	5% (JAN)		
Silver		10%	0.01	10%		
None		20%				

* Capacitance less than 10μμfd.

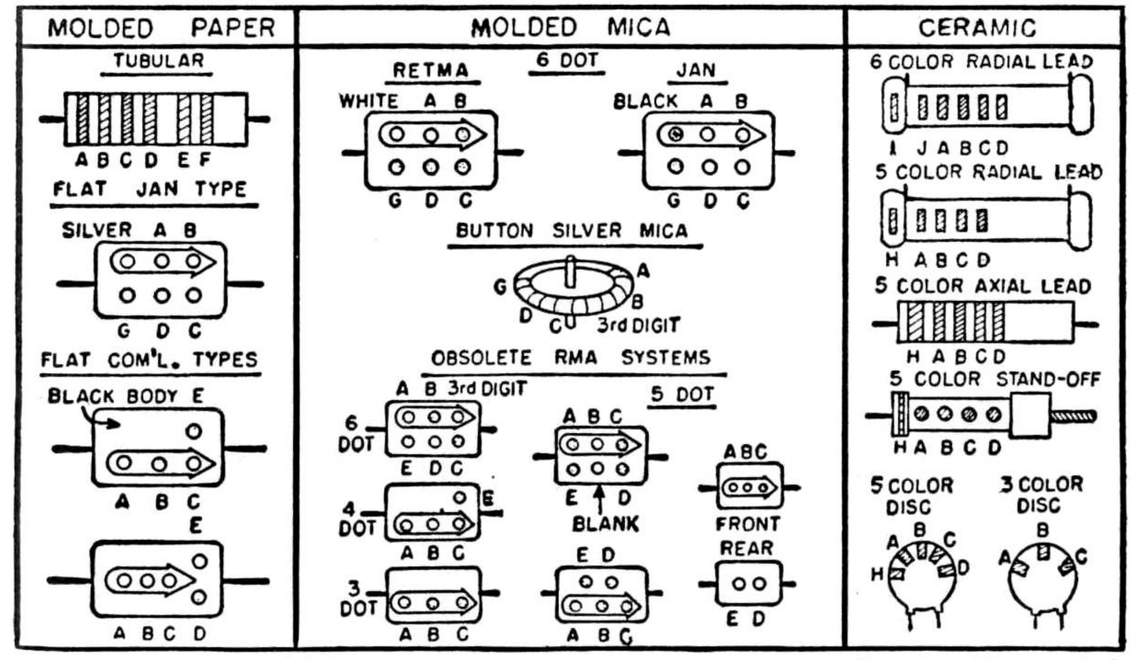

(Courtesy Popular Electronics)

Capacitance is given in μμfd.
Colors—Same value as on resistors except as indicated in tables.

COLORS	INDICATES
A	First digit
B	Second digit
C	Multiplier
D	Tolerance
E & F	Voltage Rating in hundreds of volts

[(E) Ratings less than 1000 volts, (E) & (F) First two digits of ratings 1000 volts or more. Values of colors for (E) & (F) are same as in resistance values. (G) is class or characteristics of capacitor. (H), (I) & (J) give temperature coefficient. (G), (H), (I) & (J) are not listed in the tables.]

A. F. or Decibels

Audio output generally is measured in units called Decibels, a terminology used to indicate audio power levels in an amplifier to telephone work. Zero DB is set at .775 Volts, this being the voltage developed across a 600 Ohm line when .001 Watt is dissipated in the line.

DO NOT confuse the DB with the VU (Volume Unit.) The VU is based on .001 Watt dissipated in a 600 ohm line and is measured with a meter having special ballistic characteristics.

Decibels are measured by means of the Black DB Scale. Leads connected as shown on page 15.

For reading DB other than 600 ohm line use chart below.

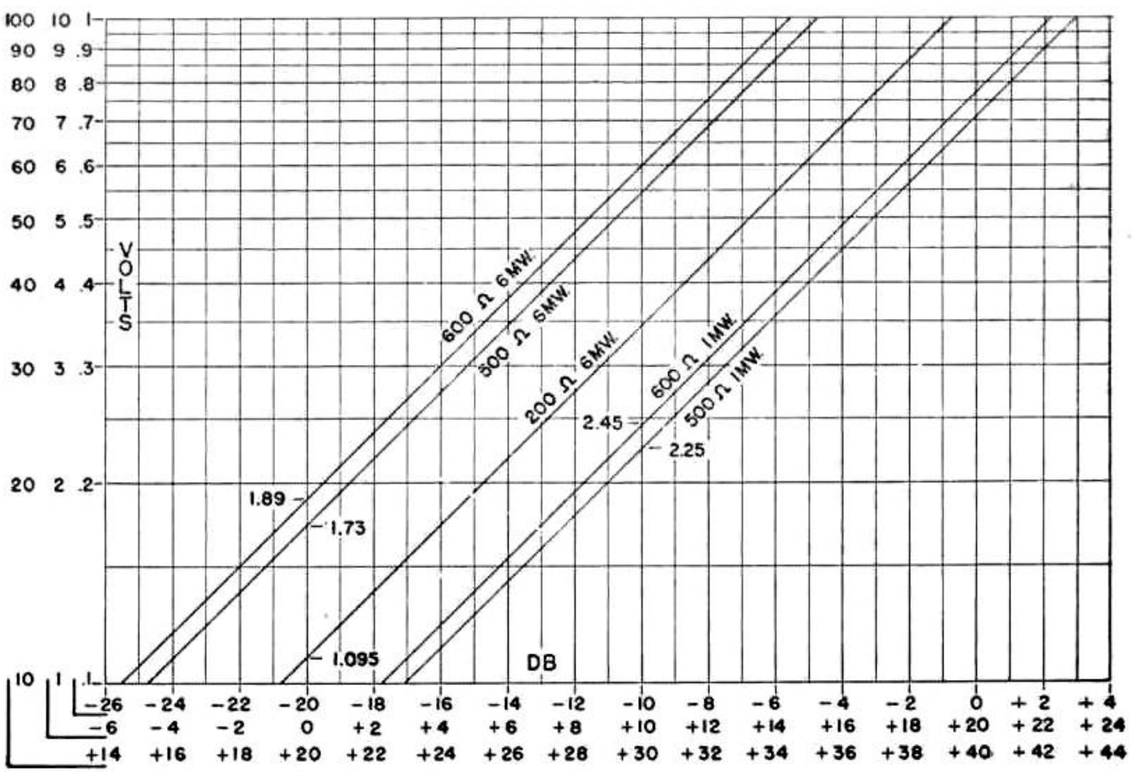

DB CHART

0 DB at 1 Mw Decibels with 600 ohm line	Line Power Mw	RMS Volts with line Imped. of 600 ohms
—20	.01	.0775
—10	.1	.245
—5	.316	.436
0	1.00	.775
+10	10.0	2.45
+15	31.6	4.36
+20	100	7.75
+30	1,000	24.5
+40	10,000	77.5
+50	100,000	245.
+60	1,000,000	775.
+70	10,000,000	2450

Note:

The range of audibility can be considered to lie from 70 db below the normal speech level to 70 db above the same level, or a total range of 140 db.

EIA SPEAKER COLOR CODE

Voice — Coil:

Green — finish
Black - - start

Field Coils:

Black and red — start
Yellow and red — finish
Slate and Red — tap (if any)

EIA WIRING COLOR CODE

B+	Red
Ground	Black
Plate	Blue
Grid	Green
Cathode	Yellow
High Heater	Brown
Low Heater	Black
Screen Grid	Orange
AVC	White

EIA TRANSFORMER COLOR CODE

I. F. Transformers:

Blue — plate lead
Red — "B" + lead
Green — grid (or diode) lead
Black — grid (or diode) return

NOTE: If the secondary of the i. f. t. is center-tapped, the second diode plate lead is green-and-black striped, and black is used for the center-tap lead.

Power Transformers:

1. **Primary Leads**.....Black
   If tapped: Common.....Black
   Tap.....Black and Yellow Striped Finish.....Black and Red Striped
2. **High-Voltage Plate Winding**.....Red
   Center-Tap.....Red and Yellow Striped
3. **Rectifier Fil. Winding**.....Yellow
   Center-Tap....Yellow and Blue Striped
4. **Fil. Winding No. 1**.....Green
   Center-Tap.....Green and Yellow Striped
5. **Fil. Winding No. 2**.....Brown
   Center-Tap.....Brown and Yellow Striped
6. **Fil. Winding No. 3**.....Slate
   Center tap.....Slate and Yellow Striped

A. F. Transformers:

Blue — plate (finish) lead of primary
Red — "B"+ lead (this applies whether the primary is plain or center-tapped).
Brown — plate (start) lead on center tapped primaries (Blue may be used for this lead if polarity is not important.)
Green — grid (finish) lead to secondary
Black — grid return (this applies whether the secondary is plain or center-tapped.)
Yellow — grid (start) lead on center tapped secondaries. (Green may be used for this lead if polarity is not important.)

Note: These markings apply also to line-to-grid, and tube-to-line transformers.

EIA RESISTOR COLOR CODE

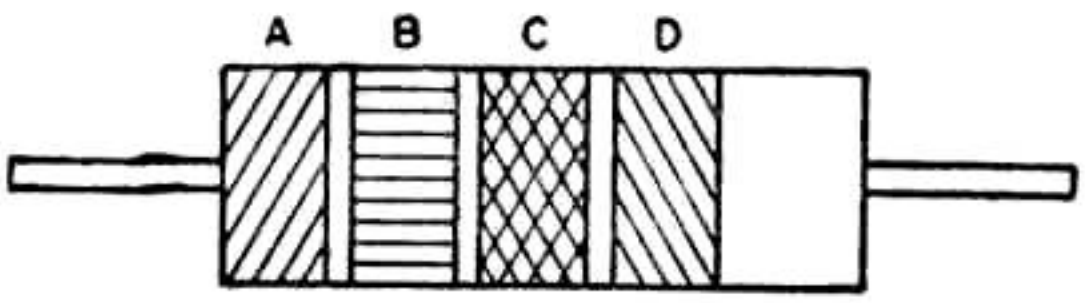

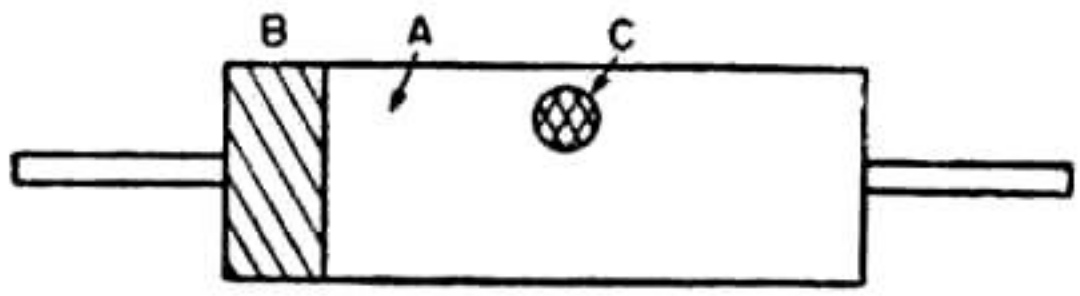

Color	Indicates
A	First number
B	Second number
C	Number of zeros
D	Tolerance

Color	Number	Color	Number
Black	0	Violet	7
Brown	1	Gray	8
Red	2	White	9
Orange	3	Gold	5% tolerance
Yellow	4	Silver	10% tolerance
Green	5	None	20% tolerance
Blue	6		

The resulting value is in ohms.

Example:

A 250,000 ohm 20% resistor.

A red B Green C Yellow D no color