RAT20
AUTOMATIC ANTENNA TUNER
TECHNICAL MANUAL

TRANSWORLD™
for communications

Manual No. RAT20-MS
Publication #990336
Printed: September 1989

304 Enterprise Street
Escondido, CA 92025, U.S.A.
Phone: (619) 747-1079, Telex 695-433
Fax (619) 741-1658

WARRANTY

Trans World Communications, Inc. (TWC) warrants that new TWC equipment has been manufactured free of defects in design, material and workmanship. If the equipment does not give satisfactory service due to defects covered by this warranty, TWC will, at its option, replace or repair the equipment free of charge.

The warranty is for a period of 90 days from the date of installation. In the event that the equipment is not installed within 90 days of factory shipment, satisfactory evidence of the installation date must be submitted.

LIMITATIONS:

This warranty does not cover physical damage caused by impact, liquids or gases. Defects caused by lightning, static discharge, voltage transients, or application of incorrect supply voltages are specifically excluded from this warranty.

RETURN OF EQUIPMENT - USA:

The equipment shall be returned freight prepaid to the Service Department, Trans World Communications, Inc., 304 Enterprise Street, Escondido, California 92025. The equipment should be packed securely, as TWC will not be responsible for damage incurred in transit. Please include a letter containing the following information:

1. Model, serial number, and date of installation.
2. Name of dealer or supplier of equipment.
3. Detailed explanation of problem.
4. Return shipping instructions.

TWC will return the equipment prepaid by United Parcel Service, Parcel Post or truck. If alternate shipping is specified, freight charges will be made collect.

RETURN OF EQUIPMENT - FOREIGN:

Write for specific instructions. Do not return equipment without authorization. It is usually not possible to clear equipment through U.S. Customs without the correct documentation. If equipment is returned without authorization, the sender is responsible for all taxes, customs duties and clearance charges.

LIMITED PARTS WARRANTY:

This warranty shall cover all parts in the equipment for a period of 12 months from the date of installation, subject to the previous conditions and limitations. The parts will be replaced free of cost. The labor charges will be made at the current TWC hourly service rate.

PARTS REPLACEMENT:

If it is not practical, or the purchaser does not want to return the equipment to the factory, this warranty is limited to the supply of replacement parts for a period of 12 months from the date of equipment installation. The following instructions for the supply of replacement parts should be followed:

1. Return defective parts prepaid to: Parts Replacement, Trans World Communications, Inc., 304 Enterprise Street, Escondido, California 92025.

2. Include a letter with the following information:
   a) Part number(s).
   b) Serial number and model of equipment.
   c) Date of installation.

Parts returned without this information will not be replaced. In the event of a dispute over the age of the replacement part, components date coded over 24 months prior will be considered out of warranty.

This page intentionally left blank.

TABLE OF CONTENTS

SECTION 1 - GENERAL INFORMATION

SECTION 2 - ANTENNA TYPES

SECTION 3 - INSTALLATION

SECTION 4 - OPERATION

SECTION 5 - MICROPROCESSOR MODULE, TECHNICAL DESCRIPTION

SECTION 5 - MICROPROCESSOR MODULE, TECHNICAL DESCRIPTION (Continued)

SECTION 6 - ANTENNA-TUNER MODULE, TECHNICAL DESCRIPTION

SECTION 7 - CHASSIS MAINFRAME

SECTION 8 - MAINTENANCE

SECTION 9 - TROUBLESHOOTING

FIGURES

TABLES

This page intentionally left blank

CHAPTER 1
GENERAL INFORMATION

1-1 INTRODUCTION

This manual contains the information required for the installation, operation, and maintenance of the RAT20 automatic antenna tuner. All pertinent installation instructions, operating procedures, schematic diagrams, parts lists and servicing data are included.

1-2 GENERAL DESCRIPTION

The RAT20 automatic antenna tuner is designed to automatically match the 50-ohm output of a PRC1099 manpack transceiver into a variety of antennas over the frequency range of 2-30 MHz. All operation, including network tuning and current monitoring, is fully automatic and microprocessor controlled. Tuning time is typically 1.5 seconds.

The RAT20 automatic antenna tuner is designed to provide tactical security by permitting remote location of the antenna up to 76 m (250 feet) from the associated transceiver. Since a radiating antenna is always a potential target under combat conditions, the transceiver and operator can be protected at a safe distance from the antenna.

1-3 PHYSICAL DESCRIPTION

The RAT20 automatic antenna tuner is designed for continuous operation under the most severe environmental conditions.

It is contained in a rugged, waterproof metal case which should be mounted (in any altitude) as close as possible to the radiating part of the antenna.

1-4 ELECTRICAL DESCRIPTION

The RAT20 automatic antenna tuner has a reactance-cancelling network consisting of 10 inductors in a binary-coded sequence, a series capacitor and two shunt capacitors. Each inductor and capacitor is inserted to the network by a relay with the inductance variable from 0.25 to 168 μH. Shunt capacitors of 47 pF and 100 pF and a series capacitor of 22 pF may be selected. The antenna is matched to the correct impedance by a broadband RF transformer providing 3 impedance steps from 12.5 to 200 ohms.

Tuning is fully automatic. The tuner is connected to the transceiver by a 4-wire control cable. Supply voltage is 12 Vdc and is normally supplied by the transceiver. Upon receipt of a TUNE INIT pulse from the PRC1099 manpack transceiver, the tuning elements are all switched to a start position. The tuner generates a KEYLINE signal which enables both the transmitter carrier output and the low-power ALC. At this time, an audio signal is also provided which indicates that the PRC1099 is in the tune mode. When RF tune power is received, the tuner automatically matches the antenna to a VSWR of 2:1 or better.

When tuning is completed, the tuner releases the KEYLINE signal which turns off the tune tone at the PRC1099 transceiver; normal transmissions are then allowed.

1-5 TECHNICAL SPECIFICATIONS

Table 1-1 lists the technical specifications of the RAT20 automatic antenna tuner.

TABLE 1-1.
Technical Specifications, RAT20 20-Watt Automatic Antenna Tuner.

Frequency Range:	1.6-30 MHz.
Tuning Capability:	
Vertical Whips	3 m (10 ft), 2.0-30 MHz, 5.5 m (16 ft) or longer, 1.6-30 MHz.
Sloping Wires	7-23 m (25-75 ft), 1.6-30 MHz, 23 m or longer with LWA, 1.6-30 MHz.
	NOTE: Other types of antennas may be used in the range of 1.6-30 MHz provided they are at least 5.5 m (16 ft) or longer.
Rated RF Input Power (50 Ohms):	20 W PEP continuous, 3.5-30 MHz, 20 W PEP, 50% duty cycle, 1.6-3.5 MHz.
	NOTE: Continuous duty-cycle operation below 3.5 MHz can be tolerated only with antennas 9.6 m (32 ft) or longer.
Tuning Mode:	Fully automatic once actuated.
Tuning Accuracy (50 ohms):	VSWR 2:1 or better typical. VSWR 2.5:1 maximum using antennas within tuning capability.
Tuning Time:	3 seconds typical. 15 seconds maximum. Returns automatically to previous tune setting on power-up (silent tune).
RF Tune Power:	5 W CW from transceiver. 0.5 W CW radiated maximum.
Primary Power Requirements:	12 Vdc nominal. 2 Adc peak during tune cycle. 10 mAdc typical standby.
Environmental:	Waterproof, for exposed installations.
Temperature Range:	-30° C to +60° C.
Weight:	0.9 kg (2.0 lbs).
Size (WDH):	17.9 cm x 12.0 cm x 7.5 cm. (7.0 in x 4.7 in x 3.0 in).

CHAPTER 2
ANTENNA TYPES

2-1 GENERAL

The RAT20 automatic antenna tuner is designed primarily for use with end-fed unbalanced antennas such as whips and long wires. The radiating portion of the antenna is connected directly to the tuner through a high-voltage insulator. It is extremely important that the antenna type, site location, and grounding technique be correctly chosen so that the system will radiate effectively.

2-2 SELECTION

The RAT20 antenna tuner will operate into almost any end-fed antenna with a length of 2.5 m or more, provided an effective ground is used. The antenna efficiency will be proportional to length and in most applications will be maximum at a length of 1/4 wavelength. This means that the longest possible antenna should be selected for each installation. Very short antennas are only recommended where there is no other alternative such as in a vehicular mobile installation. The performance of short whip antennas is always very poor, particularly at the lower channel frequencies, and radiation efficiencies will be only a few percent.

CHAPTER 3
INSTALLATION

3-1 GENERAL

System installation is a three-part process covering the following steps:

a. Installing the antenna.
b. Mounting the antenna tuner.
c. Connecting the appropriate interface cables between the tuner and the transceiver.

This manual section will discuss the above-mentioned three steps in detail. This should provide sufficient information to enable the user to confidently install a complete system in the proper manner.

3-2 ANTENNA INSTALLATION

Since the antenna system is a key part of the communication system, the system must be installed correctly for satisfactory operation. The unbalanced antennas used with the automatic antenna tuner use the ground as half of the antenna system. The ground forms an "image" antenna and is a critical part of the system. This makes it essential to consider both the ground and the antenna when designing the system.

3-2.1 ANTENNA LOCATION

The following points should be carefully considered when designing the antenna system.

a. The antenna should be located in a position free of obstructions, particularly in the desired direction of communication.

b. The antenna should be kept as far away as possible from buildings, trees and vegetation. If metallic masts or supports are used, arrange the insulators so that the antenna is spaced at least 2 meters from the mast.

c. Remember that the radiating part of the antenna starts at the tuner.

The location of the bottom portion of the antenna is important.

d. Vertical antennas have an omnidirectional radiation pattern and will provide equal performance in all directions.

e. Horizontal wire antennas have maximum radiation broadside to the antenna when the frequency is less than 1/4 wavelength. As the frequency increases beyond the 1/4 wavelength, lobes will appear in the radiation pattern with the principal lobes becoming closer to the plane of the antenna as the length increases. At all times, radiation will be minimum at the end of the antenna and it should be located so that the ends point in directions where communications are not required.

f. The "VEE" construction minimizes the directivity of the horizontal antenna and is recommended for all around coverage. In addition, the "VEE" antenna is a compromise between vertical and horizontal polarization and will give good results for communications with land or marine mobile systems using vertical whip antennas.

g. High voltages (sometimes exceeding 5000 V) are present on the antenna. All parts of the antenna and tuner must be located or protected so that there is no possibility of accidental contact.

h. Do not locate the antenna close to other antenna systems.

i. Make sure that the antenna is rigidly supported. The antenna will detune if it sags or sways.

j. The connection from the tuner to the ground must be a small percentage of the total length of the antenna. Do not let the length of the ground strap exceed 1-1.5 meters. Use heavy gauge wire or strap for a ground connection.

k. Whip antennas should be connected with the minimum length of wire. (Do not exceed 0.6 meter).

l. Do not locate the tuner further from the transceiver than necessary. If the distance exceeds 35 meters it is recommended that low-loss coaxial cable be used.

3-3 GROUND SYSTEMS

The end-fed whip or long-wire antennas will only operate at maximum efficiency when used with a perfect ground system. In the manpack or portable configuration, the ground may be capacitively coupled through the operator's body or a poor ground and almost all of the output power may be lost through the "lossy" ground system. This is the major reason for the poor performance of HF manpack systems. Even placing the tuner or transceiver directly on the ground will give some improvement in efficiency. If possible, a separate ground system should be used. The tuner ground terminal should be connected directly to ground using the shortest possible wire. The ground can be a ground stake in moist soil or a water pipe going into the ground. A counterpoise system using as many radial wires as possible will improve performance even if there is no direct connection to ground. A direct connection to a vehicle body provides another effective counterpoise system. Even a single wire laid on the ground or a connection to any mass of metal such as a wire fence will improve the system performance.

3-3.1 CORROSION

The ground connections are subject to corrosion and oxidation. All joints must be clean and the hardware ade-

quately tightened. If the tuner is to be used for an extended period, the joints may be protected by an application of silicon grease and, under severe conditions, covered with electrical tape and waterproof varnish.

3-4 ANTENNA-TUNER MOUNTING

The RAT20 tuner was designed for portable applications in the most severe environmental conditions. It is contained in a rugged, waterproof, metal case which should be mounted (in any altitude) as close as possible to the radiating part of the antenna. Make sure that the tuner is mounted on a stable surface, preferably on the ground. Inspect the installation to make sure that the antenna terminal will not short the antenna terminal to the ground or ground connection.

3-5 ANTENNA CONNECTION

The antenna lead is connected to the terminal at the end of the high-voltage insulator. Make sure care is used when tightening the antenna terminal nut to prevent the stud of the terminal from rotating. Potentials of several thousand volts may be present at the antenna terminal and adequate protection must be made against accidental contact. It is also necessary to ensure that the antenna is spaced at least 3 cm from the conducting surface. Sharp points should be avoided to prevent corona discharges.

3-6 CONTROL CABLE CONNECTIONS

The RAT20 uses a Transworld C991672 control cable, which was designed to interface to the PRC1099 manpack transceiver. The tuner control cable descriptions are defined below in Table 3-1. Refer to applicable technical sections of this manual and the PRC1099 technical manual for more information.

3-7 COAXIAL CABLE CONNECTIONS

The RF connection between the transceiver and the tuner should be made with a good grade of RG213/U-type 50-ohm coaxial cable. When used with the PRC1099, both ends of the cable should be terminated with a BNC male-type connector. Transworld cable C991673 is the RF cable used to interface the RAT20 to the PRC1099 transceiver.

3-8 TRANSCEIVER INTERFACING

The RAT20 was designed to be used with the PRC1099 manpack transceiver. Refer to Figure 3-1 and paragraphs 3-4 and 3-7 above for connections with the PRC1099 and its accessories.

TABLE 3-1.
Control Connections.

Connector Pin	Line Description
J1, A	GROUND.
J1, B	+12 V, 2 A at 12 V maximum.
J1, C	TUNE INIT, starts a tune cycle. Line normally is at a high TTL logic level. Pressing the WHIP TUNE button on the PRC1099 momentarily grounds this line which activates the RAT20 tune cycle.
J1, D	KEYLINE, keys the transmitter on for low-level carrier tuning during the tune cycle. An open-collector NPN transistor grounds this line when activated.

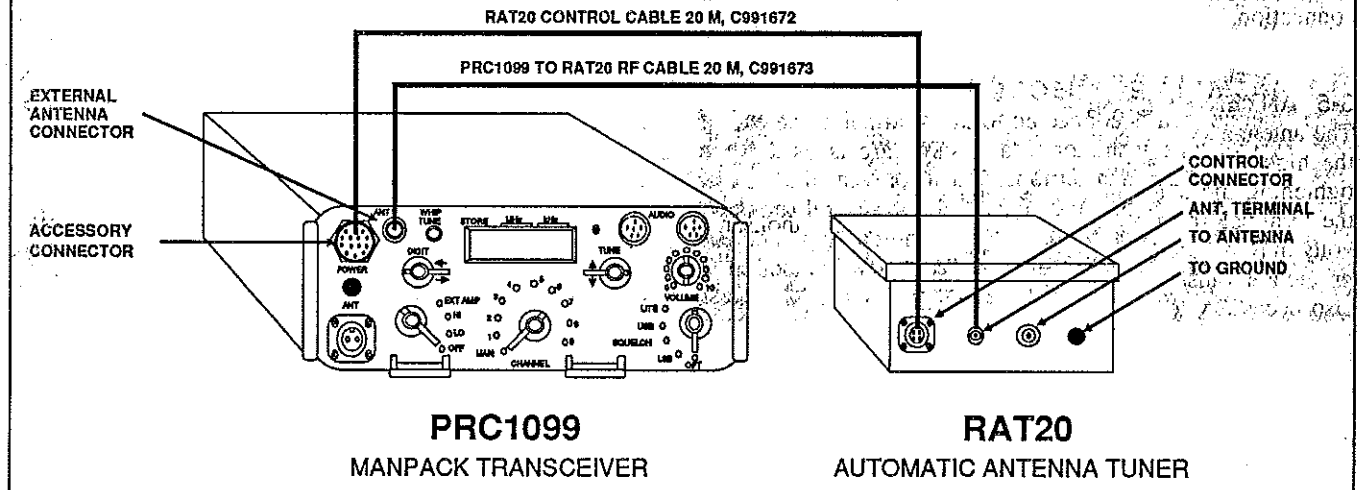

FIGURE 3-1.
Installation, Cable Connections.

CHAPTER 4
OPERATION

4-1 GENERAL

The RAT20 antenna tuner is designed to operate with the PRC1099 manpack transceiver and its accessories. After installing the antenna and the tuner, it is only necessary to connect the tuner to the transceiver using the multi-wire control cable and RF coaxial cable described in the installation chapter.

4-2 OPERATION WITH PRC1099

The following procedure should be followed when operating the tuner with the PRC1099.

a. Select the operating mode of the PRC1099, i.e., LSB, USB, USB SQUELCH.

b. Turn on the power using the power switch. Note that there are no operator controls on the tuner.

c. Select the operating frequency or channel.

d. Press and then release the WHIP TUNE button on the front panel.

After the WHIP TUNE button is pressed the TUNING TONE should be heard in the handset, which indicates that a tune cycle is in progress (the transceiver tune tone is activated). During this period the tuner holds the transceiver KEYLINE down (transmit mode) until the tune cycle is completed. Upon completion of the tune cycle the TUNING TONE switches off and the KEYLINE is released. The system is ready for use when this occurs.

If the antenna tuner does not achieve a satisfactory match, a pulsing tone will be heard at the end of the tuning cycle. The tuner will then be switched out of circuit, leaving a direct connection between the radio and the antenna. If a match is not achieved, it may be due to a transient occurring and the tuning cycle should be repeated.

NOTE

The PRC1099 must be unkeyed when the WHIP TUNE button is depressed in order to activate the tune cycle. The tuner will not start a tune cycle if transmit power is present before the button is pressed.

CHAPTER 5
MICROPROCESSOR MODULE, TECHNICAL DESCRIPTION

5-1 GENERAL DESCRIPTION

The microprocessor module contains a microprocessor and the associated components to perform the control functions of the RAT20.

Communication with the antenna tuner module is conducted through a serial data bus (control bus). Within a piece of digital equipment, it is normal to transfer data in parallel — all bits in a group (byte or word) are sent at the same time. The antenna tuner module itself requires 24 bits of information; if the data were sent in parallel 24 lines would be required, which would be expensive and complex for this application. The solution to this problem is serial data transmission, in which each of the bits is sent in turn, in agreed sequence, over a single channel or wire.

The microprocessor operates only during the period required to perform its specific control functions. This gives two important operational advantages. The first is that the processor only draws current during the brief period required to perform the control functions, typically only a few milliseconds. The second advantage is that there is no need to provide extensive shielding to stop noise in the receiver. The processor operates only when tuning is required.

CMOS devices are used throughout the module. Therefore, power drain is very low, especially in standby mode.

5-2 MICROPROCESSSOR MODULE BLOCK DIAGRAM

The microprocessor module is constructed on two separate printed circuit boards. The processor section contains the microprocessor, latch and ROM (read only memory). The interface section contains the 5-V regulator circuit and external connectors to the chassis and antenna-tuner module. A block diagram of the module is shown in Figure 5-1. The module has the following block components:

Processor Section

1. Microprocessor
2. Clock Oscillator Circuit
3. Reset Circuit
4. Memory Backup Circuit
5. Address Latch
6. ROM
7. Port C Latch

Interface Section

8. Voltage Regulator

5-3 MICROPROCESSOR

The microprocessor is combined with the ROM (read-only memory) and the input/output circuits to form a special-purpose microcomputer. The theory of operation of the microprocessor is beyond the scope of this manual. Simply stated, the microprocessor controls the operation of the tuner in response to the control inputs in accordance with the program stored in the memory.

The M7 microprocessor is a Motorola MC146805E2, which is a CMOS variant of the Motorola 6805 family of microcomputers. It features 112 bytes of RAM (random-access memory), addressing up to 8 kilobytes of ROM, internal 8-bit timer, on-chip clock oscillator and 16 bidirectional input/output lines. Software-related features include an MC6800-compatible instruction set, interrupt capability, 6 memory addressing modes and 2 power-saving standby modes.

The microprocessor operates at the clock frequency of 4.096 MHz and uses an internal oscillator controlled by Y1. B0-B7 are the multiplexed address/data bus lines, which interface to the ROM (U3), address latch (U2) and Port C latch (U4). A8-A12 are the high address lines which interface to the high address lines of the ROM. Port lines PB0-PB7 and PA0 drive the control bus.

5-4 CLOCK-OSCILLATOR CIRCUIT

The clock oscillator is internal within the microprocessor except for the crystal and external trimming capacitors. A clock-oscillator clamp circuit (Q1, R15 and R16) ensures that the processor does not operate if the 12-V line drops below 9 V and that the oscillator does not run off the lithium cell during power up.

5-5 RESET CIRCUIT

The reset circuit holds the RST line of the microprocessor (U1, pin 1) low until the 5-V supply stabilizes during power up. This restarts the microprocessor to execute instructions from either power-off or standby modes. The circuit is a dual-threshold design in which the reset line is not pulled down until the main 12-V supply (upon power up) is greater than approximately 7 V. When the 12-V supply rises higher than 9 V, the reset line is brought back high and the clock-oscillator clamp is released to ensure a thorough reset.

5-6 MEMORY-BACKUP CIRCUIT

Tuner program information is stored in RAM of the microprocessor, which must be preserved at all times. While the processor module is in power-down mode, RAM is backed up by the lithium cell (BT1).

5-7 ADDRESS LATCH

Latch U2 provides the lower address lines A0-A7 from the address/data bus to the ROM (U3). During the address phase of the address/data multiplex scheme, the address data is output on the address/data bus, then the AS line (U1, pin 7) toggles to latch the address.

5-8 ROM (Read-Only Memory)

The ROM U3 contains the permanent memory to control the operating functions of the RAT20, which includes the general operating system, and antenna-tuner control. This device is programmed in the factory and replacements must contain the correct memory program.

5-9 PORT C LATCH

The Port C latch U4 is used to output the tuner initiate signal (KEYLINE) through the transistor Q6.

5-10 5-V VOLTAGE REGULATOR

The 5-V supply for the entire tuner is located on the interface board. U106, a short-circuit-proof 3-terminal regulator provides the +5-V output.

5-11 PROGRAM OPERATION

Most of the time the microprocessor is in standby mode waiting for a command to tune from the TUNE-INIT input. When the TUNE-INIT line input switches from high to low, the processor executes the proper instructions to initiate a tune cycle.

5-12 CONTROL BUS

Communication between the microprocessor module and antenna-tuner module is performed through the control bus. The control bus basically consists of 3 signals. The signals are clock, data, and select. The processor places the first data bit on the data line at PB5 of the processor. Then it toggles the clock line (PB7) twice, so that the data is shifted into the selected shift register. This is repeated until all of the data in the data stream is shifted out. The desired select line (PA7, PB0-PB3) is then toggled twice also to latch the shifted data into the desired register.

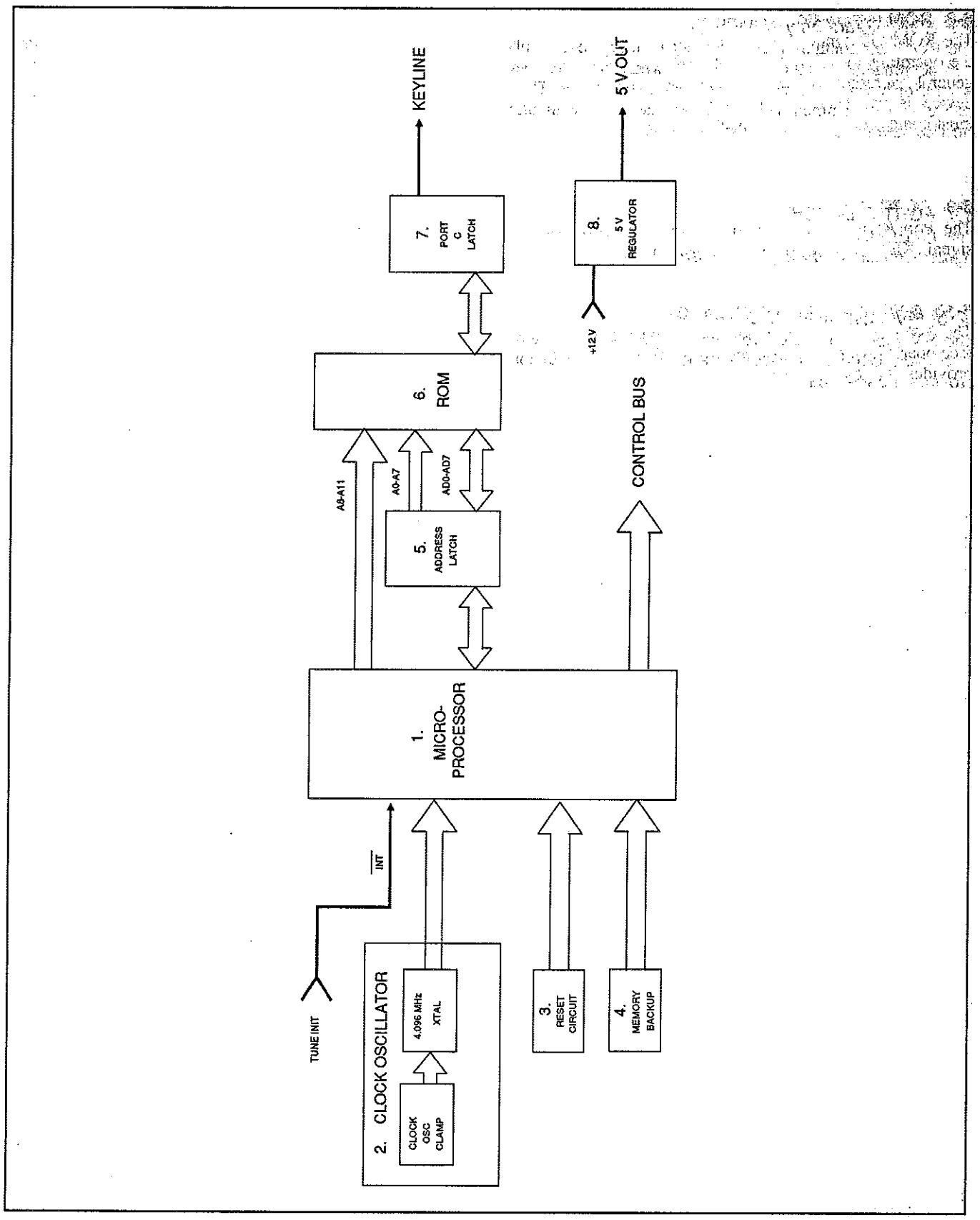

FIGURE 5-1.
Block Diagram - Microprocessor Module.

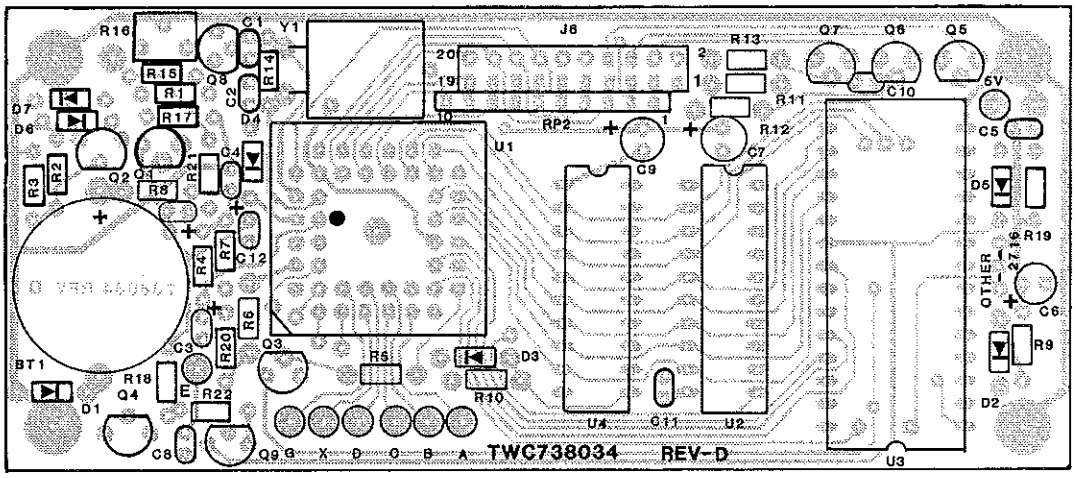

FIGURE 5-2.
Component Locations, Microprocessor Module.

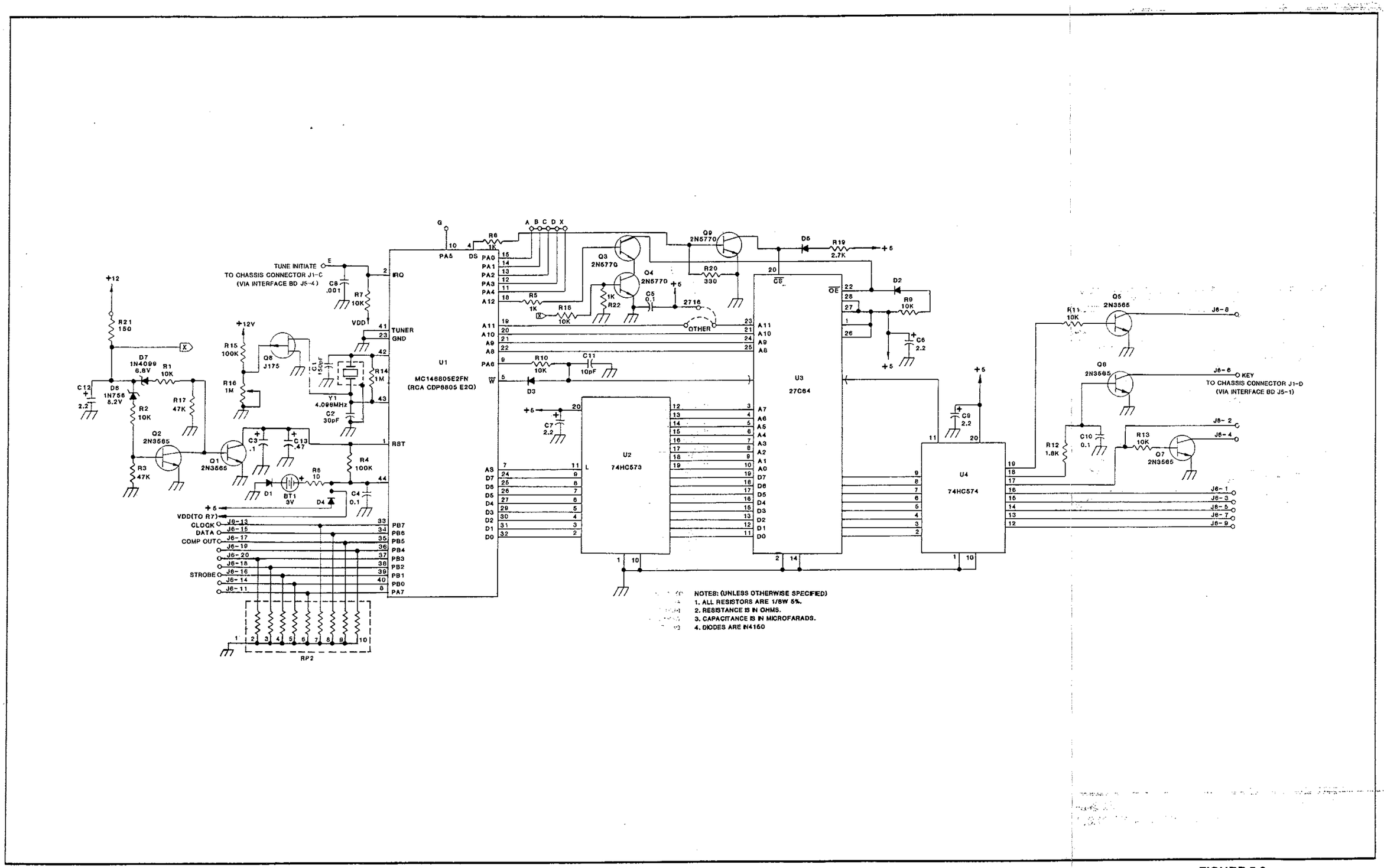

FIGURE 5-3.
Schematic Diagram, Microprocessor Module.

TABLE 5-1.
Parts List, Microprocessor Module.

BT1	750015	Battery, Lithium
C1	221151	Capacitor, Mica DM5 150 pF
C2	210300	Capacitor, Disc NPO 30 pF
C3-C5	275104	Capacitor, Monolithic 50 V 0.1 μF
C6,C7	241020	Capacitor, Tantalum 2.2 μF
C8	210102	Capacitor, Disc 0.001 μF
C9	241020	Capacitor, Tantalum 2.2 μF
C10	275104	Capacitor, Monolithic 50 V 0.1 μF
C11	210100	Capacitor, Disc NPO 10 pF
C12	241020	Capacitor, Tantalum 2.2 μF
C13	241047	Capacitor, Tantalum 35 V 0.47 μF
D1-D5	320002	Diode 1N4148
D6	320202	Diode, 1N756
D7	320226	Diode, 1N4099
Q1,Q2	310006	Transistor, NPN 2N3565
Q3,Q4	310032	Transistor, NPN 2N5770
Q5-Q7	310006	Transistor, NPN 2N3565
Q8	310072	Transistor, J175
Q9	310032	Transistor, NPN 2N5770
R1,R2	113103	Resistor, Film 1/8 W 5% 10 kΩ
R3	113473	Resistor, Film 1/8 W 5% 47 kΩ
R4	113104	Resistor, Film 1/8 W 5% 100 kΩ
R5,R6	113102	Resistor, Film 1/8 W 5% 1 kΩ
R7	113103	Resistor, Film 1/8 W 5% 10 kΩ
R8	113100	Resistor, Film 1/8 W 5% 10 Ω
R9-R11	113103	Resistor, Film 1/8 W 5% 10 kΩ
R12	113182	Resistor, Film 1/8 W 5% 1.8 kΩ
R13	113103	Resistor, Film 1/8 W 5% 10 kΩ
R14	113105	Resistor, Film 1/8 W 5% 1 MΩ
R15	113104	Resistor, Film 1/8 W 5% 100 kΩ
R16	170226	Resistor, Trimmer 1 MΩ
R17	113473	Resistor, Film 1/8 W 5% 47 Ω
R18	113103	Resistor, Film 1/8 W 5% 10 kΩ
R19	113272	Resistor, Film 1/8 W 5% 2.7 kΩ
R20	113331	Resistor, Film 1/8 W 5% 330 Ω
R21	113151	Resistor, Film 1/8 W 5% 150 Ω
R22	113102	Resistor, Film 1/8 W 5% 1 kΩ
RP2	182002	Resistor, Pak, 100 kΩ
U1	330276	IC, MC146805E2FN
U2	330141	IC, 74HCT573
U3	330320	IC, 2764-15
U4	330157	IC, 74HC574N
Y1	360037	Crystal, 4.096 MHz

CHAPTER 6
ANTENNA-TUNER MODULE, TECHNICAL DESCRIPTION

6-1 DESIGN CONSIDERATIONS

The RAT20 antenna tuner must match the standard AT-271A/U whip antenna and a variety of long-wire antennas over the range 2-30 MHz. The whip antenna poses special design problems, as the antenna will be very short in relationship to a resonant antenna over most of the frequency range. Additionally, the ground system may be extremely poor when used as part of a manpack configuration. It is very difficult to maintain an exact match to the antenna, since very small movements by the operator, or poor ground may detune the antenna. The tuner should be fast in operation, have low current drain in the tune mode and no standby current drain. It is also desirable to keep the tune power as low as possible and to retain in memory the tune data for the fixed channel frequencies.

6-2 MATCHING NETWORK

The resonant frequency of the AT-271A/U whip antenna is approximately 24 MHz. This means that over most of the frequency range the antenna will have a capacitive reactance which can be cancelled by an equivalent series inductance. The tuner uses a binary-sequenced series of inductors to cancel out the reactive component of the antenna. If the antenna has inductive reactance, capacitance is added so that the antenna appears capacitive and the small residual reactance is cancelled by adding series inductance. The internal capacitors will match the whip antenna and most long-wire antennas, but on some frequencies the inductive reactance may be very high. When a long-wire antenna is used, the internal series capacitor may be used to bring the reactance within the tuning range of the network. After the reactance is cancelled, the tuner will present a resistive load between 6 and 400 ohms to the transceiver. A broadband impedance transformer is used to select the closest available matching impedance 712.5, 50 or 200 ohms.

6-3 TUNING SYSTEM

A very simple and reliable tuning system is used. Instead of using a VSWR detector, a current detector measures the current flowing to the antenna. The transceiver operates in the low-power (5-W) mode, and a 10-dB attenuator reduces the power to 500 mW. Because the output impedance of the transmitter is 50 ohms (determined by the resistive pad), maximum current will flow when there is a conjugate match or a resistive load of 50 ohms. The system is simple, reliable and accurately determines minimum VSWR.

6-4 TUNING RESOLUTION

The tuner typically tunes for a VSWR of less than 1.5:1 but can reach 2:1 if the resistive component falls midway between the impedance taps. In a manpack or portable situation, the impedance match may change if the operator moves or if a poor ground is used. Therefore, it is very important to design the final amplifier so that it is very tolerant of mismatched loads. For example, the PRC1099 final amplifier is capable of a power output of 30-40 W and is able to deliver 20 W into substantial mismatches. At VSWR's of 2:1 there is typically less than 0.5-dB output degradation and, even at 3:1 VSWR there is only about 1-dB performance change.

6-5 TUNING PROGRAM

The tuning program is resident in the ROM of the microprocessor module which executes the tuning program. The tuning program uses proprietary algorithms developed specifically for the RAT20. When the tune button is pressed (at the transceiver) the microprocessor checks the frequency and determines which elements should be used. The transmitter is keyed in the low-power mode and the inductors are stepped in a special sequence until a current peak is reached. If no current peak is detected, the antenna is inductive and the capacitors are sequenced in combination with the inductors until a tuning peak is reached. At this point the antenna current is checked. If the current is low, the alternate tap positions are checked; and the tap with the optimum current is selected. The current is then checked; and if the current is low, an incorrect tune will be signaled. It may be possible to operate the transceiver even if an incorrect tune is signaled. The tuner will remain at the setting that achieved the best match. The last tune combination is retained in memory and will be automatically selected each time the channel is changed. The tune information in memory is updated each time the tune button is pressed.

6-6 BLOCK DIAGRAM

A block diagram of the antenna tuner module is shown in Figure 6-1. This diagram shows the block functions of the antenna-tuner module circuitry. The module has the following block functions:

1. Binary Sequence Inductors—0.25 to 168 μH.
2. Shunt Capacitors—50/100 pF.
3. Series Capacitor—22 pF.
4. Current Detector.
5. Impedance Transformer.
6. Attenuator.
7. Comparator.
8. D/A Decoder.
9. Serial Decoders.
10. Relay Drivers.

6-7 BINARY-SEQUENCED INDUCTORS

In order to resonate the AT-271A/U whip antenna at 2 MHz, an inductance of approximately 168 μH is required. It must be possible to vary the inductance from zero to 168 μH. The best solution is a series of inductors, switched in and out of circuit in a binary progression. By starting with L1, a 0.25 μH inductor, and doubling the size of each inductor up to 84 μH, it is possible to change the

inductance in 0.25 μH steps from zero up to 168 μH and use only 9 inductors. The tuner uses 10 inductors, as it is necessary to use two separate 44 μH inductors, L9 and L10, for the final inductance step. This prevents voltage flashover and keeps the size of the inductors compatible with the available space in the module. Each inductor is a toroid using wire and core sizes carefully optimized for maximum Q. It should be noted that very high voltages are generated at maximum inductance when using the whip antenna. When used with the PRC1099, to prevent flashover and possible RF burns to the operator, power of the PRC1099 is automatically reduced when inductors L8, L9, and L10 are in circuit. This keeps the maximum output voltage from exceeding approximately 1000 V.

6-8 SHUNT CAPACITORS

The two shunt capacitors C1 and C2 are used when the antenna exhibits inductive reactance. The capacitors give 50 to 150 pF in 50-pF steps. The minimum step size that will cause the antenna to appear capacitive is used, and the remaining reactance is cancelled with series inductance. The capacitors are connected between L6 and L7. This minimizes the effects of stray capacitance and reduces the required voltage rating.

6-9 SERIES CAPACITOR

A series capacitor, C4, is connected between the antenna terminal and the largest binary inductor, L10. It is switched in and out of the network by relay K17. This element is needed in some instances where the antenna impedance is near resonance; it rotates the impedance to a value that can be matched by the rest of the network.

6-10 CURRENT DETECTOR

The current detector uses a saturated transformer directly in line to the series inductors. The transformer is a ferrite toroid, T1, with a single-turn primary and a multi-turn secondary virtually shorted by the 47-ohm resistor R4. The detector output is a voltage proportional to the current flowing in the primary. The RF voltage is rectified by D1.

6-11 IMPEDANCE TRANSFORMER

The impedance transformer is a 2:1 ferrite balun switched by relays K13 and K14. The transformer may be switched out of circuit to provide a 50-ohm match, act as a step-up transformer for a 200-ohm match and act as a step-down transformer for a 12.5-ohm match. With the three impedances available, the transformer will provide a match of 2:1 or better over the impedance range of 6 ohms to 400 ohms.

6-12 10-DB ATTENUATOR

The attenuator pad R1/R2/R3 is switched into circuit during the tune mode by the relay K15. The exact attenuation of 9.5 dB has been chosen so that standard-value resistors may be used. The transmitter operates in the low-power mode (5 W) during the tune cycle, and the attenuator reduces the output power to 500 mW. The resistive pad ensures that the transmitter has a true output impedance of 50 ohms, so that maximum output is with a 50-ohm load (a conjugate match). This means that maximum output current to the antenna corresponds with minimum VSWR.

6-13 COMPARATOR

The comparator U1C is used to compare the output from the current detector and the reference level from the digital to the analog convertor U2. The output from the current detector is amplified by one section of the quad amplifier U1B. The switches Q2 and Q3 switch R7 and R8 to ground. This gives three different gain levels set by the ratio of R21 to R6, R7 or R8.

6-14 D/A DECODER

The microprocessor can only recognize a high or low output, and it is necessary to provide a reference level to the comparator in order to measure the analog output from the current detector. The output from the decoder is under serial control by the microprocessor module and is quantized into 64 steps by output from the decoder. The binary steps are selected by the switching of R12 through R17. Switching R7 and R8 controls the gain of U1A.

6-15 SERIAL DECODER

The serial decoders U3 and U4 translate the serial data from the microprocessor to 16 different outputs controlling the relay drivers.

6-16 RELAY DRIVERS

The relay drivers U5, U6, U7 and U8 are 16 NPN transistors contained in four separate 16-pin DIP packages. There are 14 latching relays in the tuner. These relays have separate coils for latching and unlatching the relay. The relays require short current pulses for latching or unlatching and draw no current in the static condition. Separate drivers are provided to latch each relay; and one transistor, Q1 (driven by one section of U8), is used to unlatch all relays. The microprocessor always unlatches all relays before each switching operation and resets those latched relays that require no change of state, as well as those relays requiring switching. This system means that separate drivers are not required to unlatch each relay.

6-17 SERVICE DATA

Figure 6-2 is a component location diagram with signal input/output points indicated.

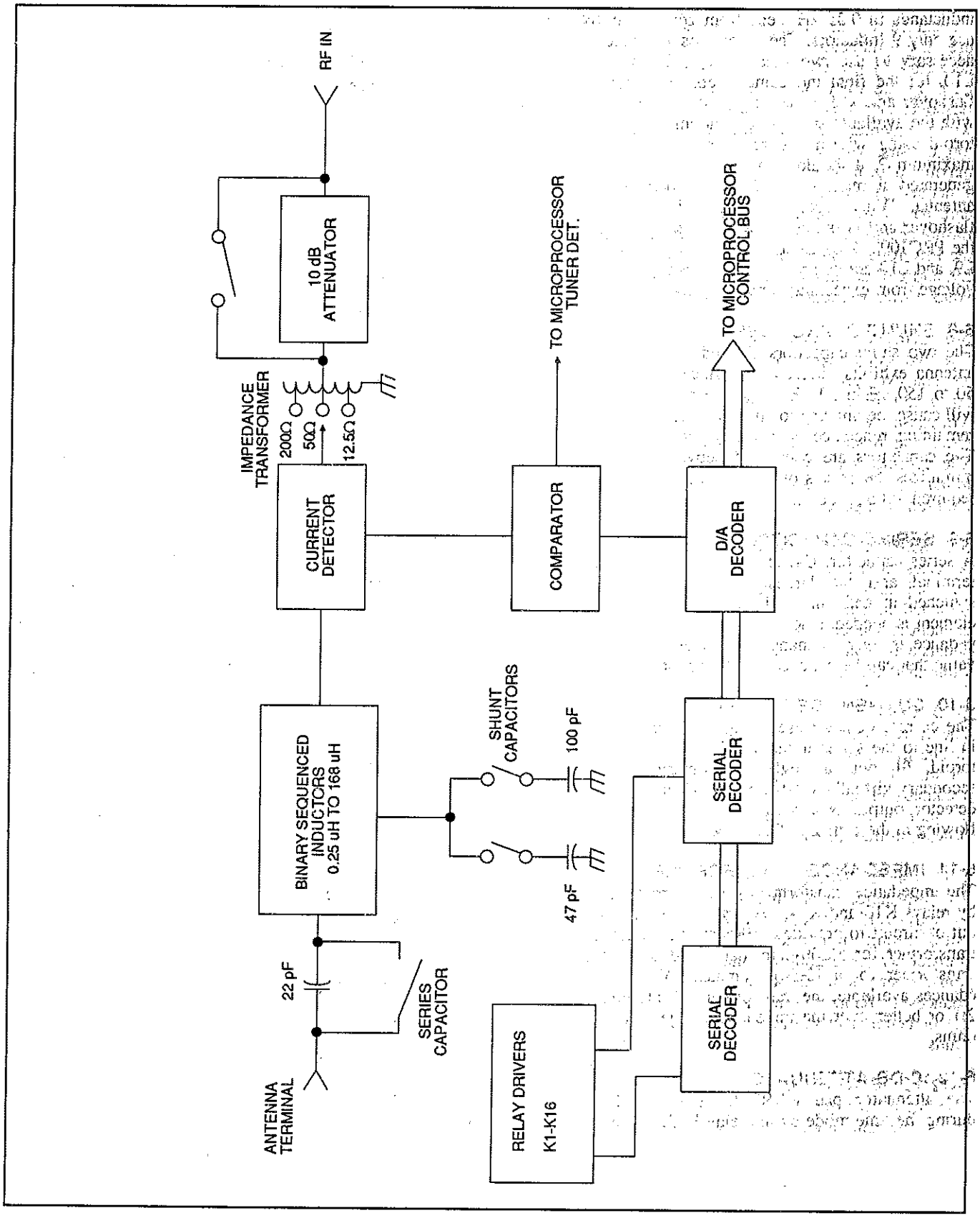

FIGURE 6-1.
Block Diagram - Antenna Tuner Module.

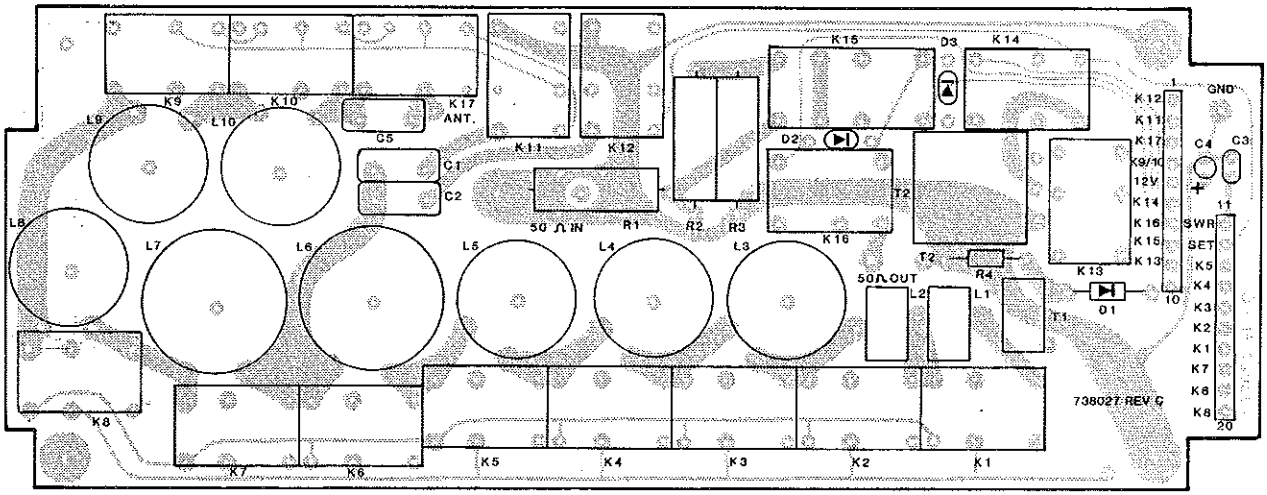

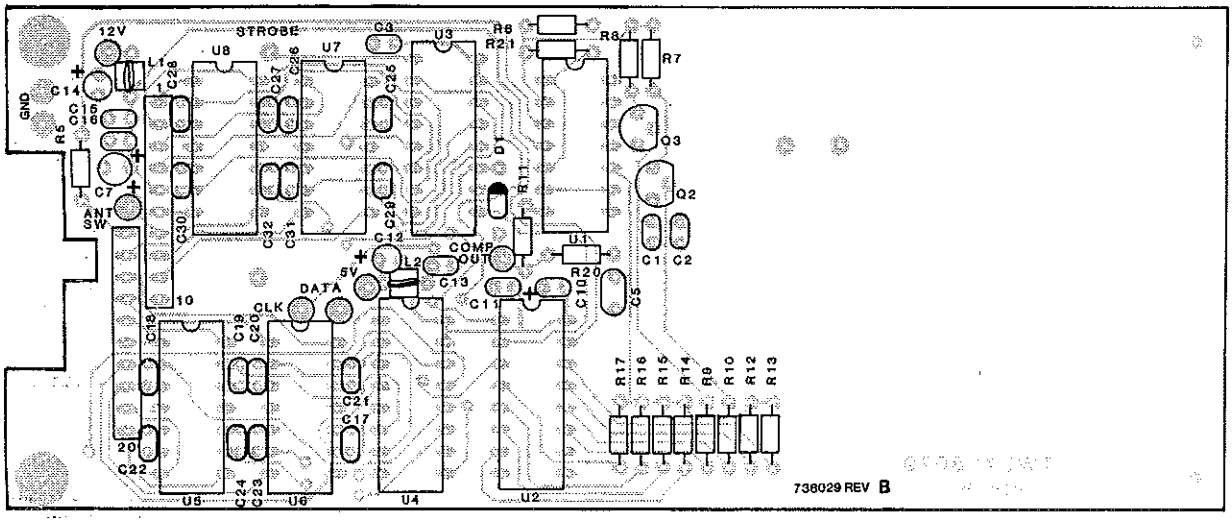

FIGURE 6-2.
Component Locations, Antenna Tuner Module.

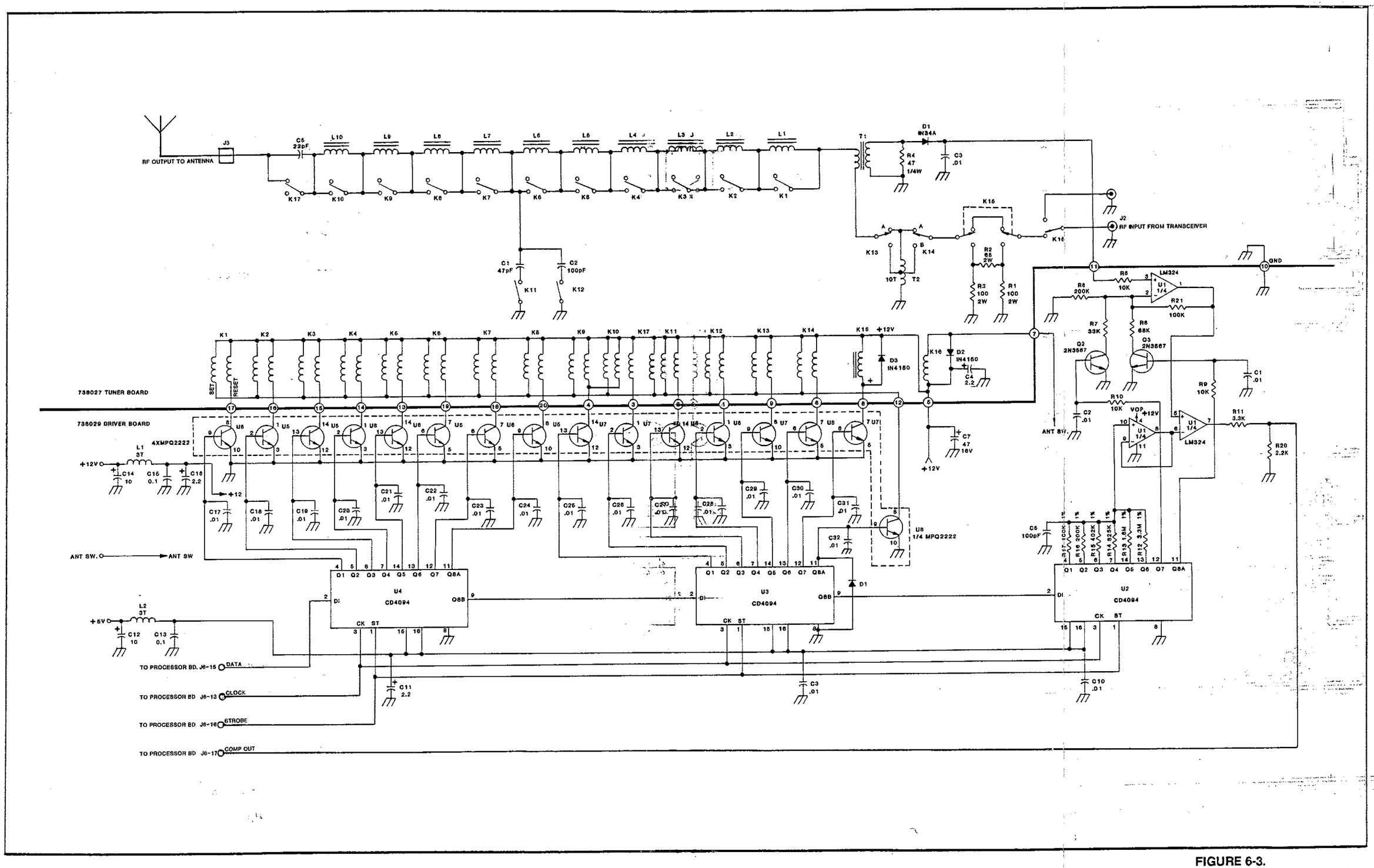

FIGURE 6-3.
Schematic Diagram, Antenna Tuner Module.

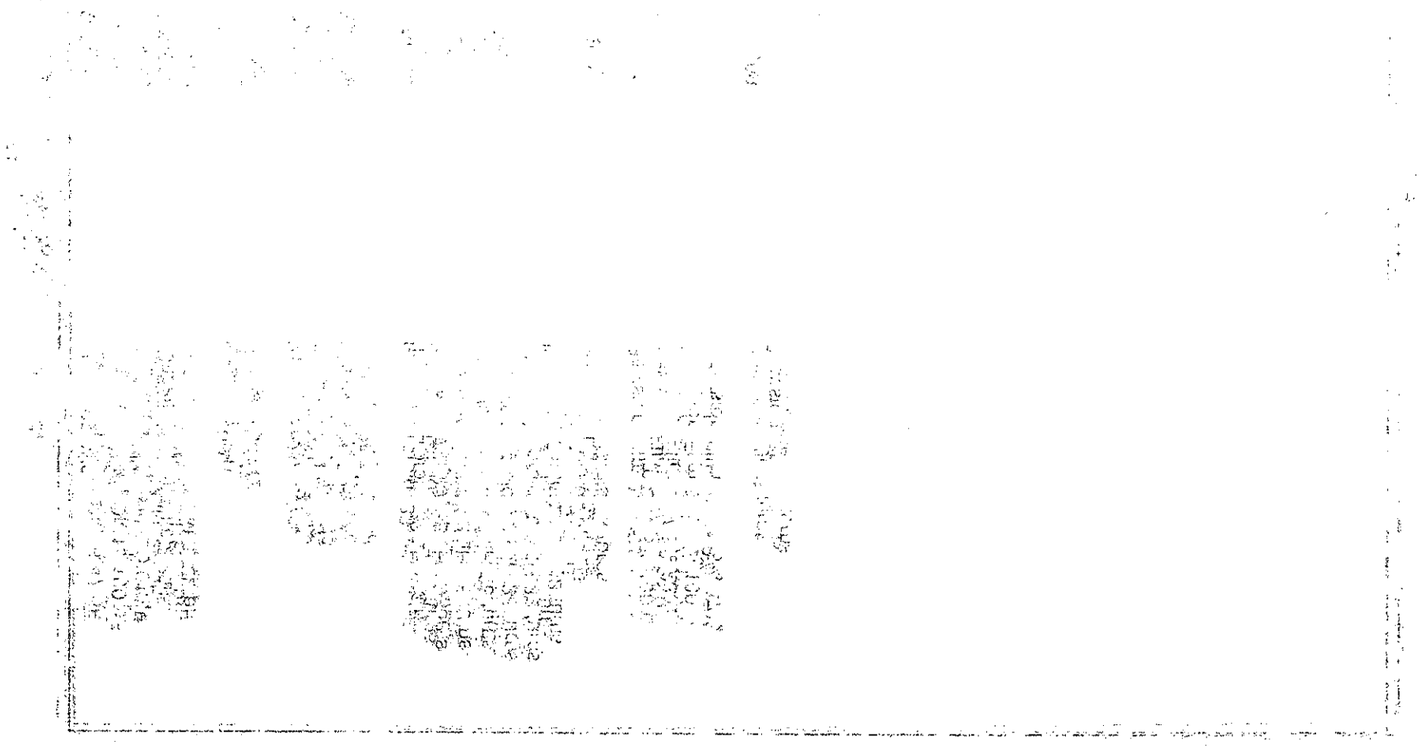

TABLE 6-1.
Parts List, Antenna Tuner Module, Tuner Board.

C1	220470	Capacitor, Mica DM15 47 pF
C2	220101	Capacitor, Mica DM15 100 pF
C3	214103	Capacitor, Monolithic 0.01 µF
C4	241020	Capacitor, Tantalum 2.2 µF
C5	220220	Capacitor, Mica DM15 22 pF
D1	320003	Diode, 1N34A
D2,D3	320002	Diode, 1N4148
K1-K14	540019	Relay, SPDT 12 Vdc
K15	540045	Relay, DPDT 12 Vdc
K16	540056	Relay, SPDT 12 Vdc
K17	540019	Relay, SPDT 12 Vdc
L1	459005	Inductor, Toroid .33 µH 9 turns
L2	459004	Inductor, Toroid .66 µH 13 turns
L3	459003	Inductor, Toroid 1.3 µH 18 turns
L4	459002	Inductor, Toroid 2.5 µH 26 turns
L5	459006	Inductor, Toroid 5.23 µH 26 turns
L6	459007	Inductor, Toroid 10.5 µH 32 turns
L7	459010	Inductor, Toroid 21 µH 42 turns
L8	459008	Inductor, Toroid 70 turns
L9,L10	459118	Inductor, Toroid 74 turns
R1	154101	Resistor, Film 2 W 5% 100 Ω
R2	154680	Resistor, Film 2 W 5% 68 Ω
R3	154101	Resistor, Film 2 W 5% 100 Ω
R4	124470	Resistor, Film 1/4 W 5% 47 Ω
T1	459009	Transformer, 6 turns
T2	459011	Transformer, 10 turns

TABLE 6-2.
Parts List, Antenna Tuner Module, Driver Board.

C1-C3	214103	Capacitor, Monolithic 0.01 μF
C5	210101	Capacitor, Disc 100 pF
C7	237470	Capacitor, Tantalum 16 V 47 μF
C10	214103	Capacitor, Monolithic 0.01 μF
C11	241020	Capacitor, Tantalum 2.2 μF
C12	241100	Capacitor, Tanatalum 10 μF
C13	275104	Capacitor, Monolithic 0.1 μF
C14	241100	Capacitor, Tantalum 10 μF
C16	241020	Capacitor, Tantalum 2.2 μF
C17-C32	214103	Capacitor, Monolithic 0.01 μF
D1	320002	Diode, IN4148
L1,L2	459032	Inductor, Ferrite 3 turns
Q2,Q3	310003	Transistor, NPN 2N3567
R5	113103	Resistor, Film 1/8 W 5% 10 kΩ
R6	1112003	Resistor, Film 1/8 W 1% 200 kΩ
R7	113333	Resistor, Film 1/8 W 5% 33 kΩ
R8	113683	Resistor, Film 1/8 W 5% 68 kΩ
R9,R10	113103	Resistor, Film 1/8 W 5% 10 kΩ
R11	113332	Resistor, Film 1/8 W 5% 3.3 kΩ
R12	1113304	Resistor, Film 1/8 W 1% 3.3 MΩ
R13	1111604	Resistor, Film 1/8 W 1% 1.6 MΩ
R14	1118253	Resistor, Film 1/8 W 1% 825 kΩ
R15	1114023	Resistor, Film 1/8 W 1% 402 kΩ
R16	1112003	Resistor, Film 1/8 W 1% 200 kΩ
R17	1111003	Resistor, Film 1/8 W 1% 100 kΩ
R20	113222	Resistor, Film 1/8 W 5% 2.2 kΩ
R21	113104	Resistor, Film 1/8 W 5% 100 kΩ
U1	330030	IC, LM324N
U2-U4	330126	IC, CD4094BE/MC14094BCP
U5-U8	310101	IC, MPQ2222

CHAPTER 7
CHASSIS MAINFRAME

7-1 GENERAL

This chapter contains information on the mainframe components not covered elsewhere, as well as an overall wiring diagram of the RAT20 antenna tuner.

Figure 7-1 shows an exploded view of the processor, interface and antenna tuner subassemblies, and the mainframe schematic is shown in Figure 7-2.

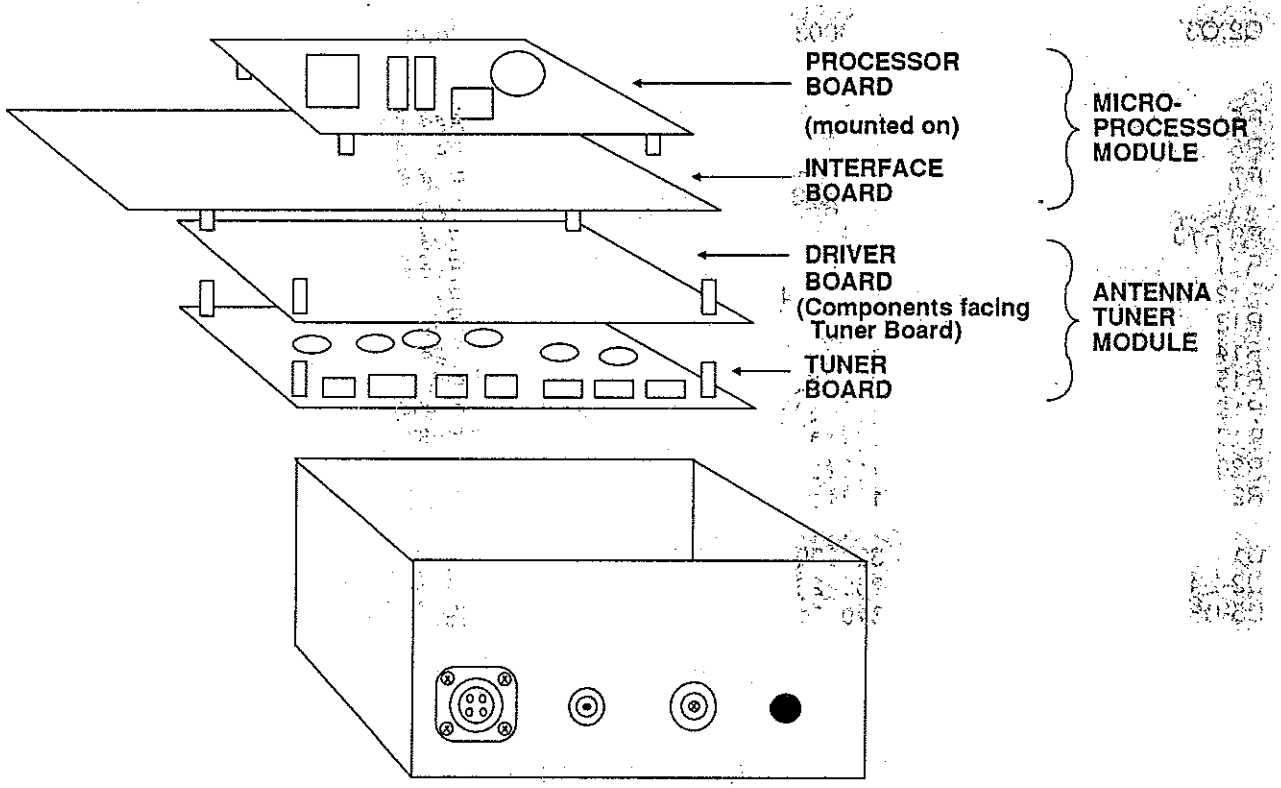

RAT20
AUTOMATIC ANTENNA TUNER

FIGURE 7-1.
RAT20 Subassemblies, Exploded View.

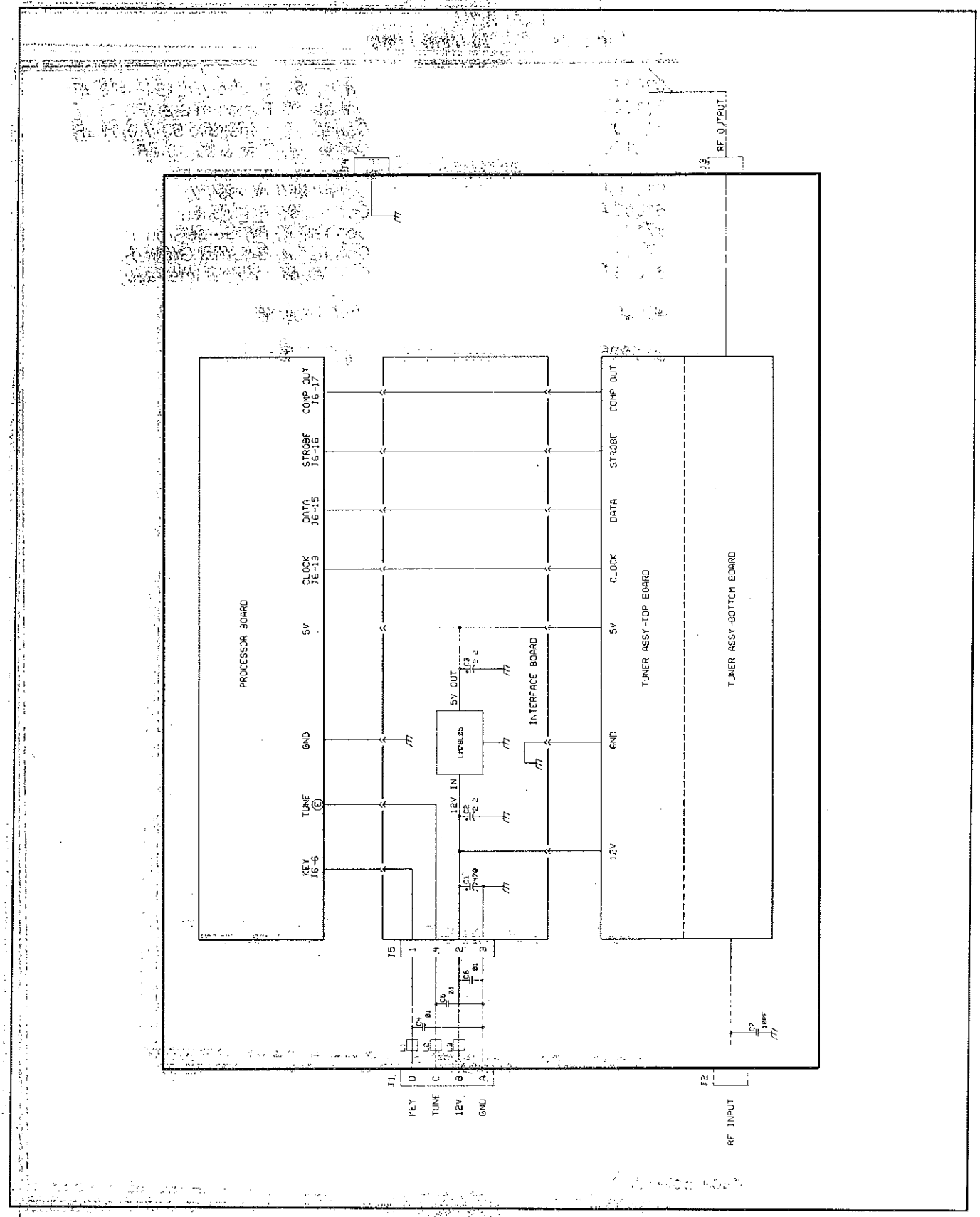

FIGURE 7-2.
Schematic Diagram, RAT20 Mainframe.

TABLE 7-1.
Parts List, RAT20 Mainframe.

C1*	230471	Capacitor, Electrolytic 16 V 470 μF
C2,C3*	241020	Capacitor, Tantalum 2.2 μF
C4-C6	214103	Capacitor, Monolithic 50 V 0.01 μF
C7	212100	Capacitor, Disc 3 kV 10 pF
J1	613004	Connector, Acessory
J2	610084	Connector, RF Input
J3	871002	Connector, RF Output
J4	871090	Connector, External Ground
J5*	610235	Connector, Internal Interface
L1-L3	490201	Bead, Ferrite
U1*	330025	IC, 78L05

* Parts located on Interface Board.

CHAPTER 8
MAINTENANCE

8-1 GENERAL

This chapter discusses maintenance procedures at the organizational level. This includes preventive and operator's maintenance procedures. No special tools or test equipment are required.

8-2 PREVENTIVE MAINTENANCE

Preventive maintenance is the systematic care, servicing, and inspection of the equipment to prevent the occurrence of trouble, to reduce downtime, and to ensure that the equipment is serviceable.

The procedures given in paragraph 8-3 cover systematic care essential to proper upkeep and operation of the equipment. The cleaning operations should be performed daily when the equipment is in use and weekly when the equipment is in standby condition. The other items must be checked before the equipment is placed in operation, during operation and after shutdown.

8-3 PREVENTIVE MAINTENANCE CHECKLIST

This preventive maintenance schedule is for the RAT20 only, and in no way alters the preventive maintenance instructions for the companion transceiver.

1. Completeness. Check to see that the equipment is complete with all accessories.

2. Cleanliness. Check to see that equipment is clean and free of dirt, dust corrosion, grease and fungus. Remove fungus, grease, and ground-in dirt using a cloth dampened with trichlorethylene. Remove dust and dirt from connections.

3. Preservation. Check surfaces for evidence of rust or corrosion; remove and spot paint bare surfaces. When paint on the tuner has been damaged, prevent corrosion by touching up the damaged area(s). Use solvent (SD) and #0000 sandpaper to clean the surface until the exposed bare metal is bright and smooth. Then paint using a small brush per specification.

4. Publications. Check to see that all publications are complete, serviceable, and current.

5. Gaskets. Check gaskets for moisture, oil saturation, and brittle, broken, cracked, loose, pinched, mismatched, or missing sections.

6. Mountings. Check to ensure that all hardware (nuts, bolts, washers, etc.) are correctly positioned and properly tightened.

7. Connections. Check to be sure that all plugs and receptacles are clean, intact, and that all connections are tight and properly connected.

CHAPTER 9
TROUBLESHOOTING

9-1 GENERAL

This chapter discusses troubleshooting procedures at the organizational and depot level. This includes operator's and module-level troubleshooting procedures. The module level procedures do require the tools, test equipment and skill level of a qualified repair technician.

9-2 SYSTEM-LEVEL TROUBLESHOOTING

The first thing to do if the RAT20 is not operating properly is to determine whether the trouble is related to the system components such as the power source (battery, power supply), the antenna, the companion transceiver, the interconnecting cables or the tuner itself.

Many faults that appear related to the tuner may be found by an inspection of the complete system:

1. Cables connected wrong. Check applicable system hook-up diagram.

2. Worn, broken, or disconnected cables or plugs. Check cables for continuity and shorts.

3. Grounded or broken antenna or antenna cable.

4. Defective transceiver.

5. Low power supply voltage. Measure input dc to tuner.

6. Incorrect setting of transceiver controls.

7. Transmit frequency is out of the usable range of the selected antenna configuration.

If the transceiver operates satisfactorily on its own, and all cables check out, the RAT20 is probably defective and should be referred to the next higher maintenance level.

9-3 MODULE-LEVEL TROUBLESHOOTING

The level of maintenance to be performed on the RAT20 depends on the tools, test equipment and skill level of the repair technician. The RAT20 antenna tuner should be repaired only by qualified personnel provided with suitable tools and test equipment. An inexperienced operator attempting to repair the tuner may cause more damage through careless probing.

9-3.1 DISASSEMBLY

To troubleshoot and repair the RAT20, the tuner must be partially disassembled. Remove the top cover screws, then remove the cover. Access is now available to the top of the microprocessor module, with the antenna-tuner module beneath. (NOTE: Take care when disassembling and assembling mechanical parts; try not to change the location of wires, as this may affect circuit performance.)

9-3.2 CIRCUITRY ACCESS

Access to other module sections may require removal of the module assembly. To remove, unplug the harness at J1 and either unsolder or remove the antenna terminal nut to release the antenna terminal lead. Remove the bottom screws to release the circuit modules. Use care in removing the circuit modules from the chassis so as not to sever or damage the RF input coax cable. The RF input coaxial cable should be unsoldered if complete module removal from the chassis is required. Separation of the module sub-assemblies may also be required for inspection. Refer to the exploded view of the module sub-assemblies in the Chassis/Mainframe section, Chapter 7.

9-3.3 TROUBLESHOOTING PROCEDURE

Position the chassis so that the control harness may be connected to the module assembly. Before applying power, first visually inspect the inside of the tuner for obvious defects such as burnt components or loose wires. Then, measure the impedance across the +12-V line at J1 of the interface section of the microprocessor module to check for a short on the 12-V supply line. Connect the tuner to the PRC1099 as described in Chapter 3, Installation. Make sure that the RF input lead, antenna-terminal lead and control harness are connected if needed for diagnosis.

1. If the tuner seems dead (no audible sound of relay action) when attempting to tune, check these points:

   a. Main supply 12 V at J5-2 (Refer to the mainframe schematic, Figure 7-2).
   b. Check for 5 V at U1 (LM78L05) (regulator output) at the 5-V regulator.
   c. Check that the KEYLINE toggles when a tune is initiated.
   d. Check that the microprocessor crystal is operating.
   e. Make sure that the module interconnect cables and connections are not broken, severed or corroded.

2. If the tuner will not tune to load or consistently tunes to a bad match, check these points:

   a. Check internal chassis connections to antenna terminal, RF input connector.
   b. Make sure that the module interconnect ribbon cables are not broken, severed or corroded.
   c. To verify detector circuitry operation, check the current sensor (using an oscilloscope) by watching the voltage change at U1-1 (on the antenna-tuner module) as the inductance changes during a tune cycle.
   d. Check for overheated or burnt attenuator resistors on the antenna-tuner module.
   e. Make sure that there is a good ground connection (via the module standoffs) between the chassis and module assemblies.