DAIWA
DC POWER SUPPLY
PS-30XMII
VOLTAGE 1-15V VARIABLE
RATED CURRENT 24A
MAX CURRENT 30A
MAX 10A
MAX 30A
13.8V
MIN
MAX
1-15V
V.ADJ.
ON
OFF
POWER

CHING SHENG
CS-02VO
8161
R18
2SC-1281
JAPAN

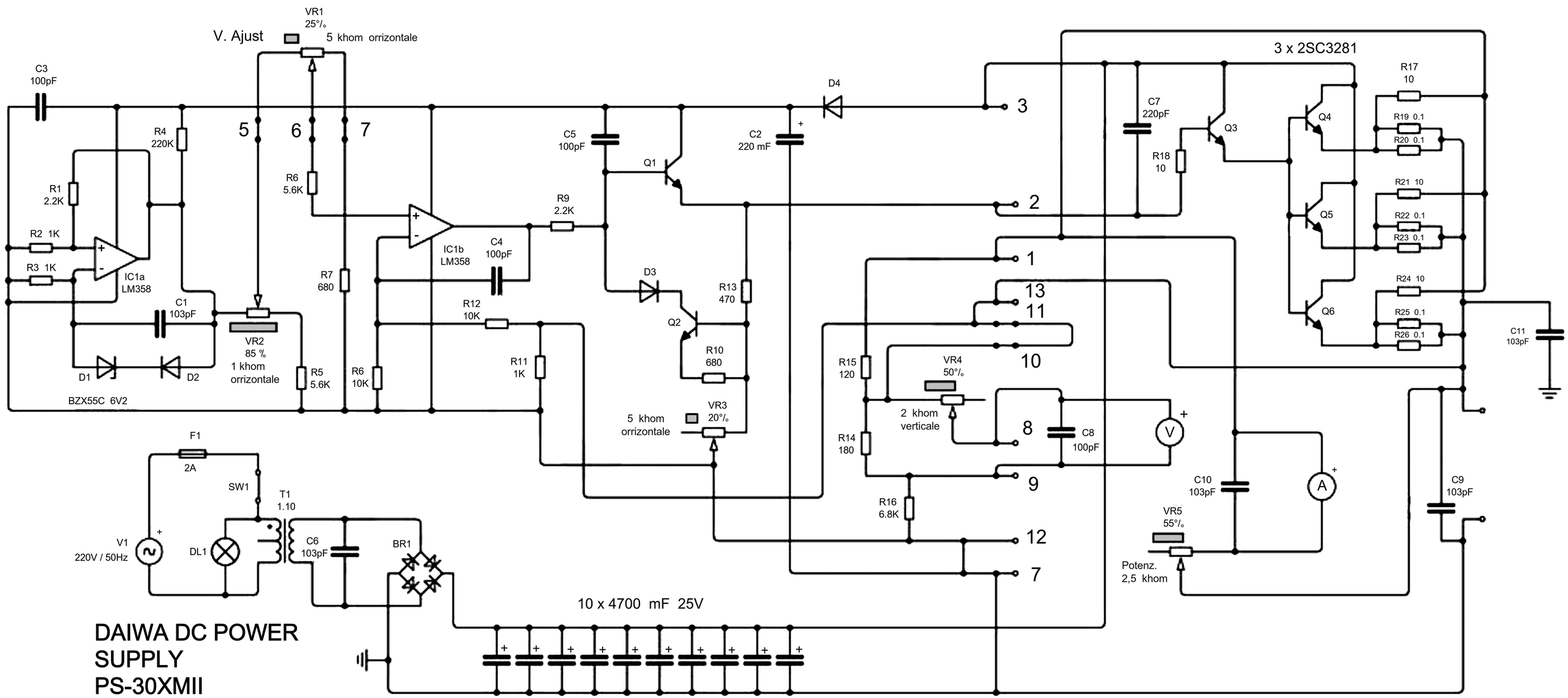

DAIWA DC POWER SUPPLY
PS-30XMII

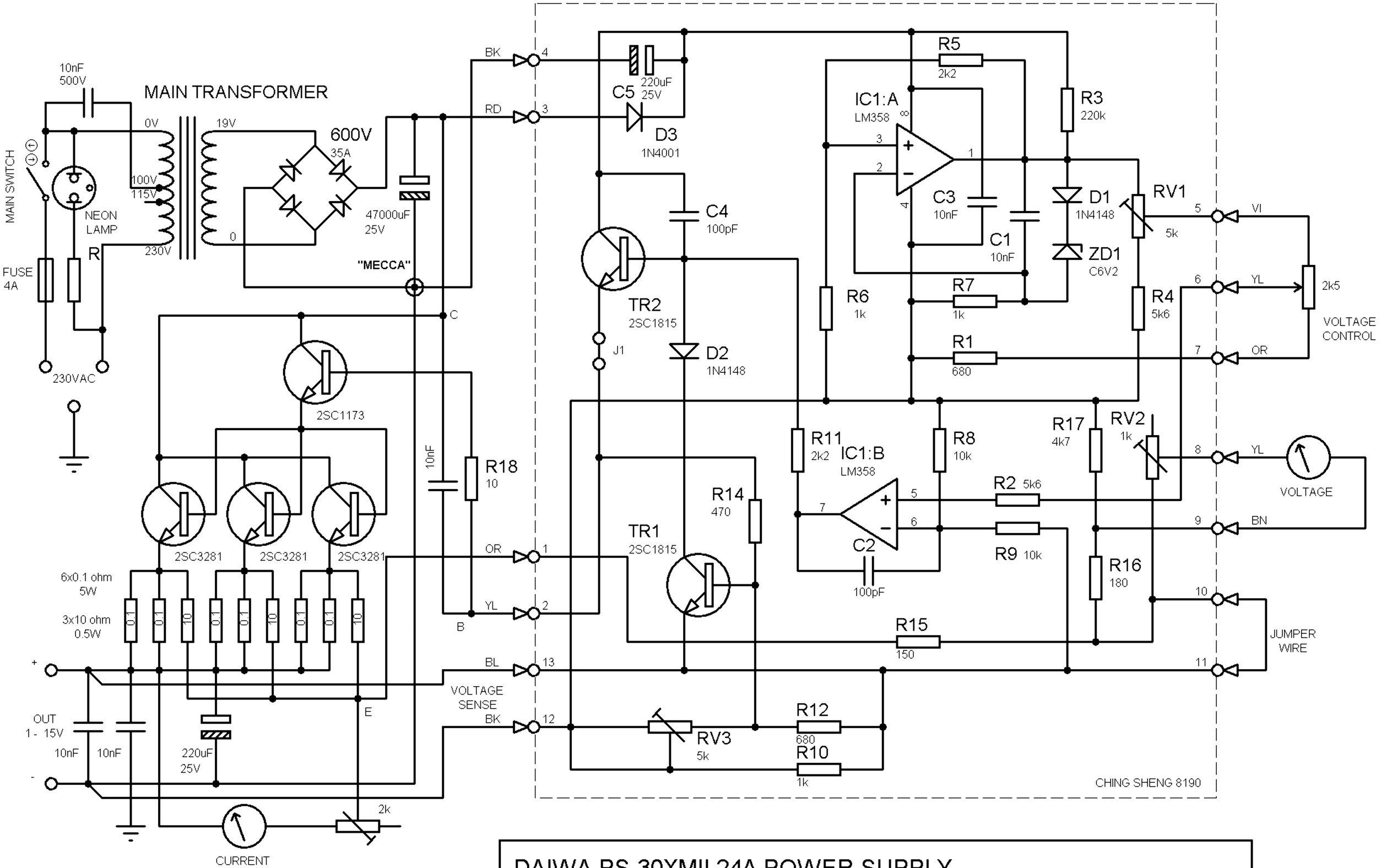

DAIWA PS-30XMII 24A POWER SUPPLY

2007-02-04 OH2AUS

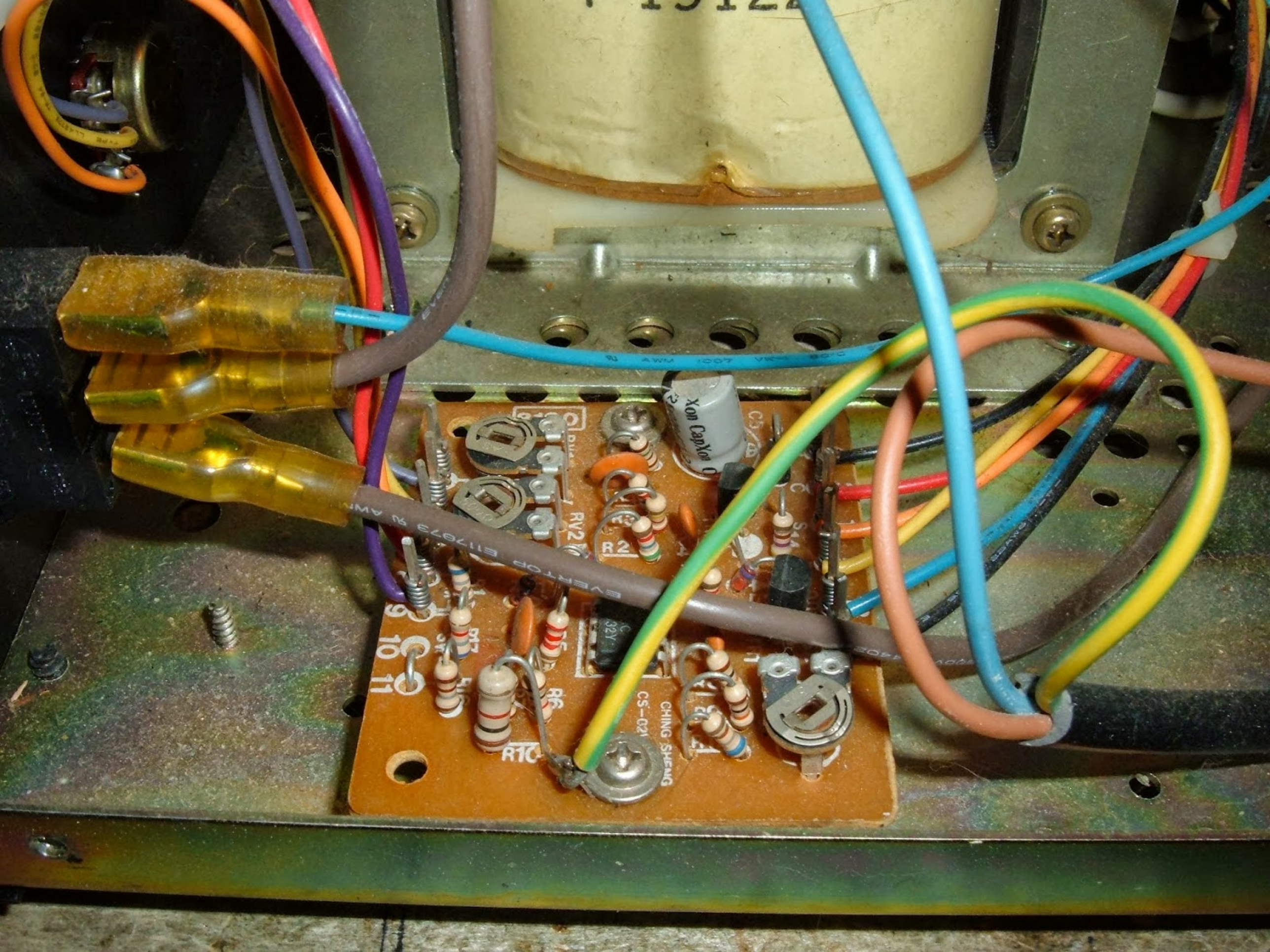
Xon CapXon
RV2
R2
R3
R5
R6
R10
CHING SHENG
CS-021
EVERTOP E117873 #2 AWM

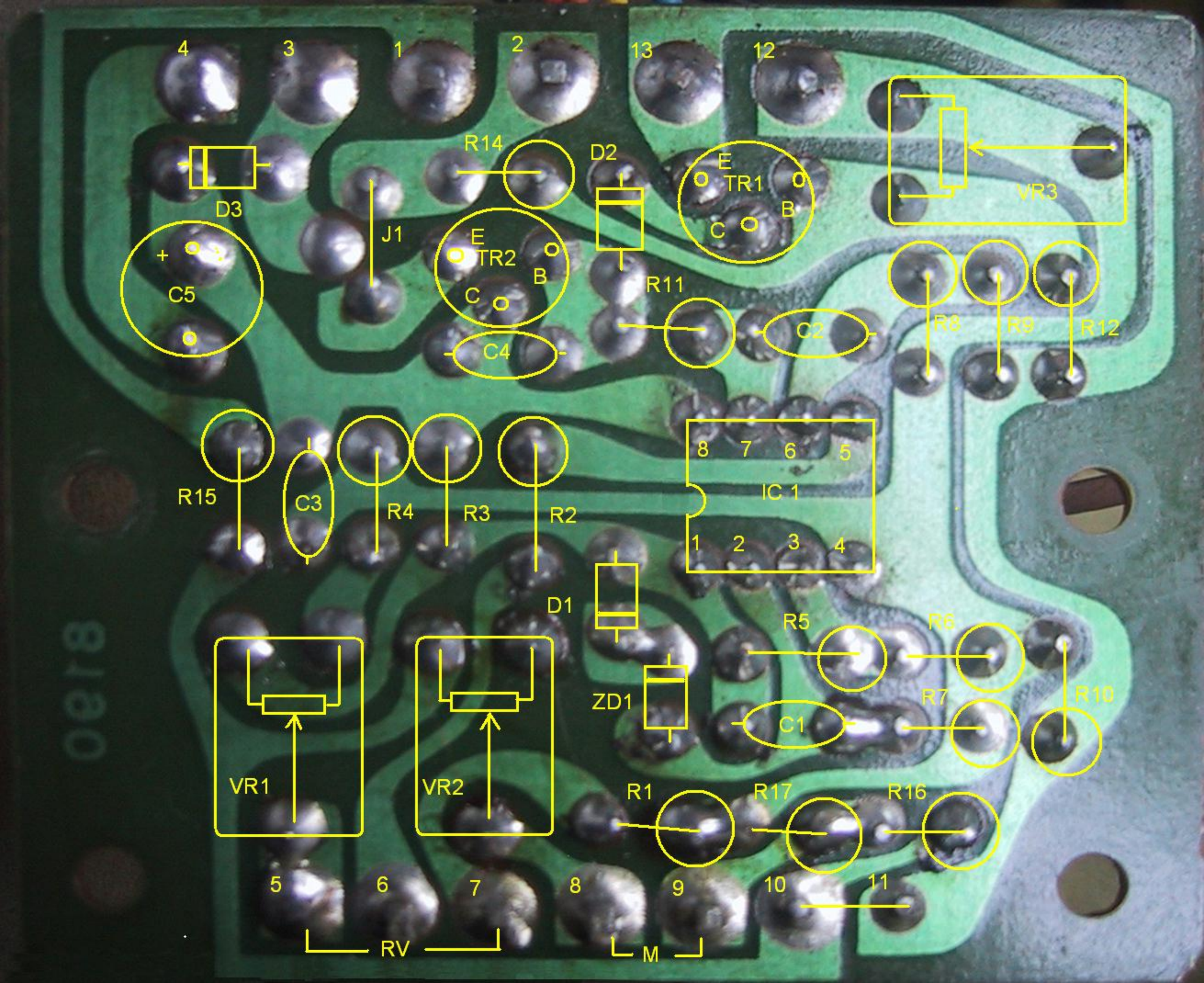
4
3
1
2
13
12
R14
D2
E
TR1
B
C
VR3
D3
J1
E
TR2
B
C
C5
+
R11
C2
R8
R9
R12
C4
8
7
6
5
IC 1
1
2
3
4
R15
C3
R4
R3
R2
D1
R5
R6
ZD1
R7
R10
C1
VR1
VR2
R1
R17
R16
5
6
7
8
9
10
11
RV
M

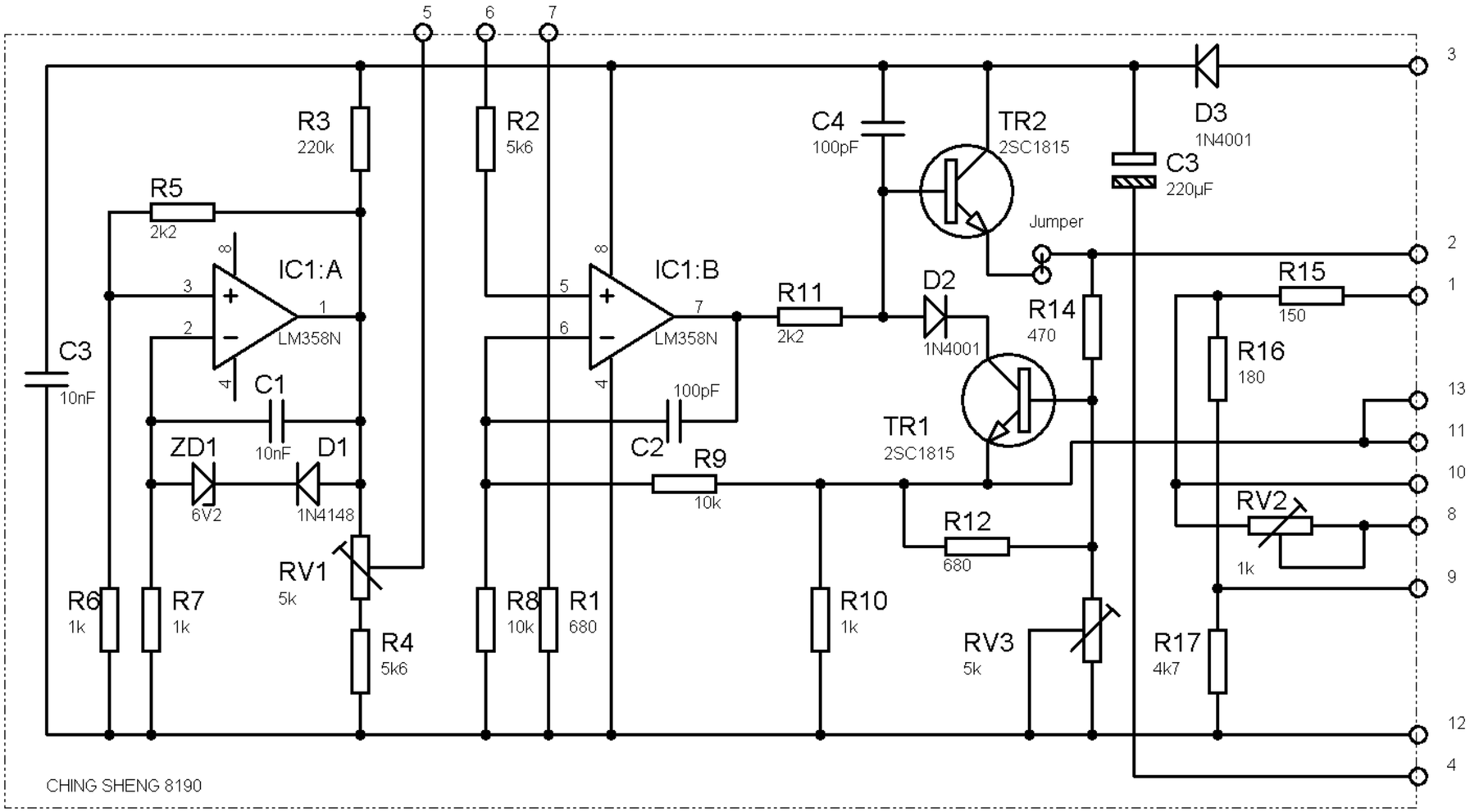

DAIWA PS-30XM II Control Board

OH2AUS - 20150315

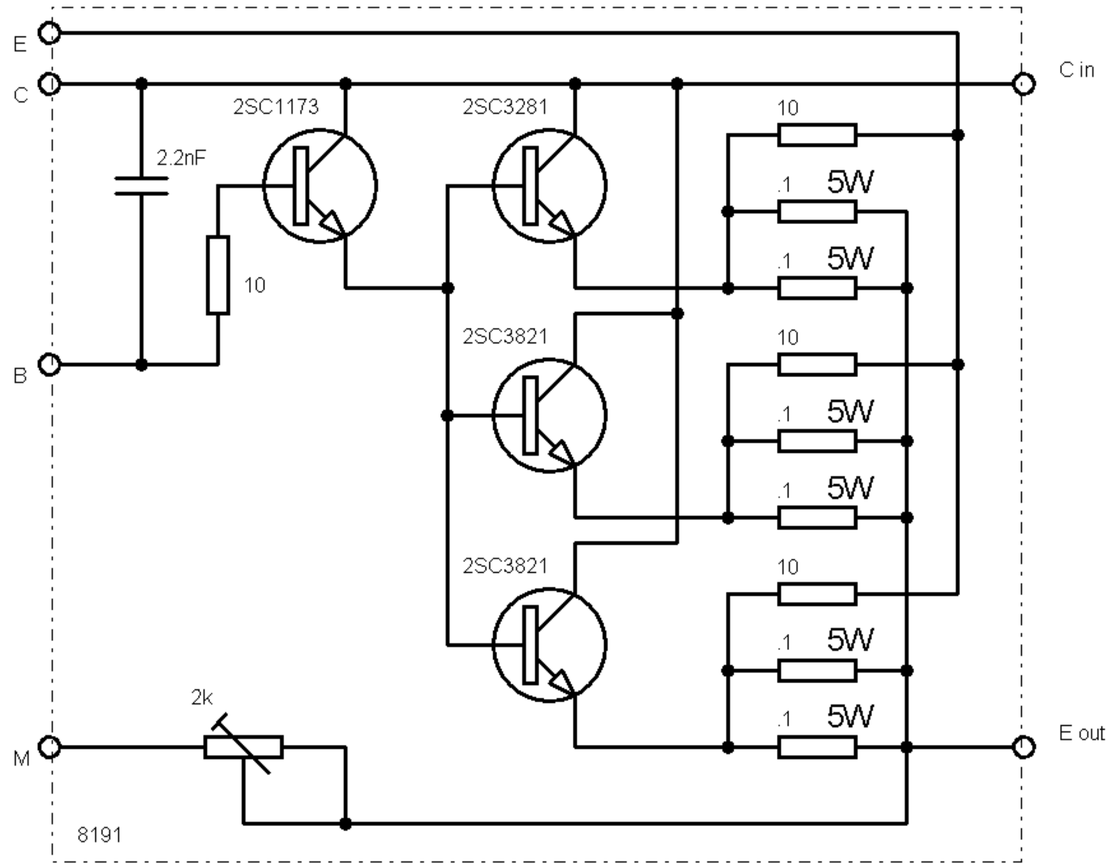

DAIWA PS-30XM II Output Board

OH2AUS - 20150319

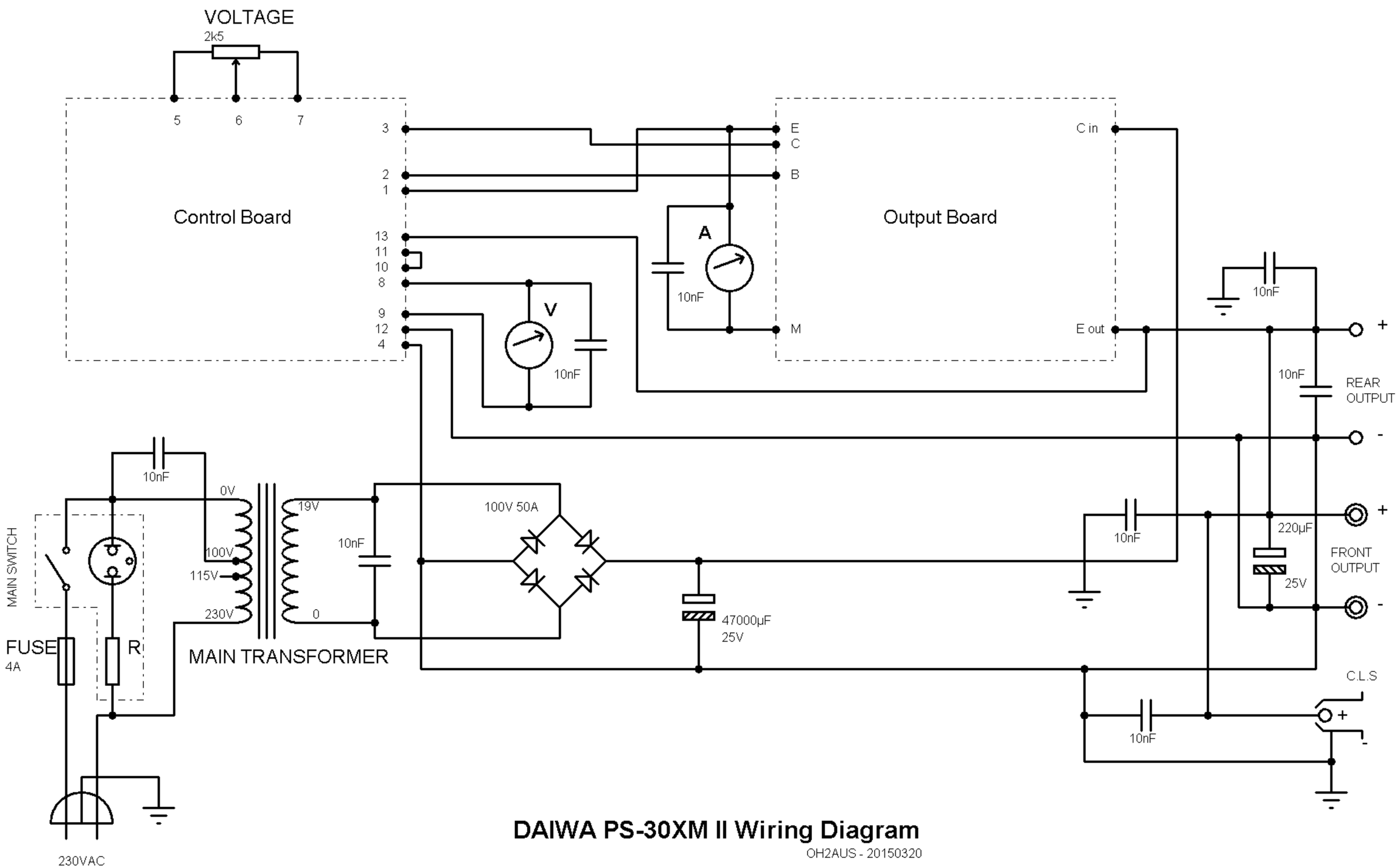

DAIWA PS-30XM II Wiring Diagram

OH2AUS - 20150320

DAIWA PS-30XM II power supply, components

Component	Symbol	Value	Remarks
IC:s	IC1	KA358	=LM358
Transistors	Tr1	2SC1815	
	Tr2	2SC1815	
	Buffer	2SC1173	
	Serietrans.	2SC3281 x3	200V 15A 150W
Diodes	D1	Small signal (1N4148?)	
	D2	Small signal (1N4148?)	
	D3	1N4001	
	ZD1	6V 400mW	
	Rectifier	Bridge 600V 35A	
Capacitors	C1	10n cer.	
	C2	100p cer.	
	C3	10n cer.	
	C4	100p cer.	
	C5	220u 25V elect.	
	Buffer B-C	10n cer.	between B & C
	Filter	47000u 25V elect.	Main filter capacitor
	Bypass front	10n cer. x2	+ & - to GND
	- " -	220u 25V elect.	+ to -
	Bypass Hella	10n cer.	+ to -
	Bypass rear	10n cer. x2	+ & - to GND
Resistors	R1	680R 0.25W	
	R2	5k6 0.25W	
	R3	220k 0.25W	
	R4	5k6 0.25W	
	R5	2k2 0.25W	
	R6	1k 0.25W	
	R7	1k 0.25W	
	R8	10k 0.25W	
	R9	10k 0.25W	
	R10	1k 0.5W	
	R11	2k2 0.25W	
	R12	680R 0.25W	
	R14	470R 0.25W	
	R15	150R 0.25W	
	R16	180R 0.25W	
	R17	4k7 0.25W	
	R18	10R 0,25W	
	R18	10R 0.5W (x3)	
	R19	0R1 5W (x6)	Emitter, serieresistor
Pot.meters	RV1	5k hor.	Tensione di uscita grossolana
	RV2	1k hor.	Calibrazione Volmetro
	RV3	5k hor.	Limite di corrente
	RV4	2k vert.	Calibrazione Amperometro
	RV5	2.5k w. knob	Tensione di uscita
Other	R	incl. S1	Lamp serieresistor
	F1	Fuse 4A	Main fuse
	S1	Switch w. light, 1-p.	Main switch
	T1	230V / 19V, 500VA	Transformer