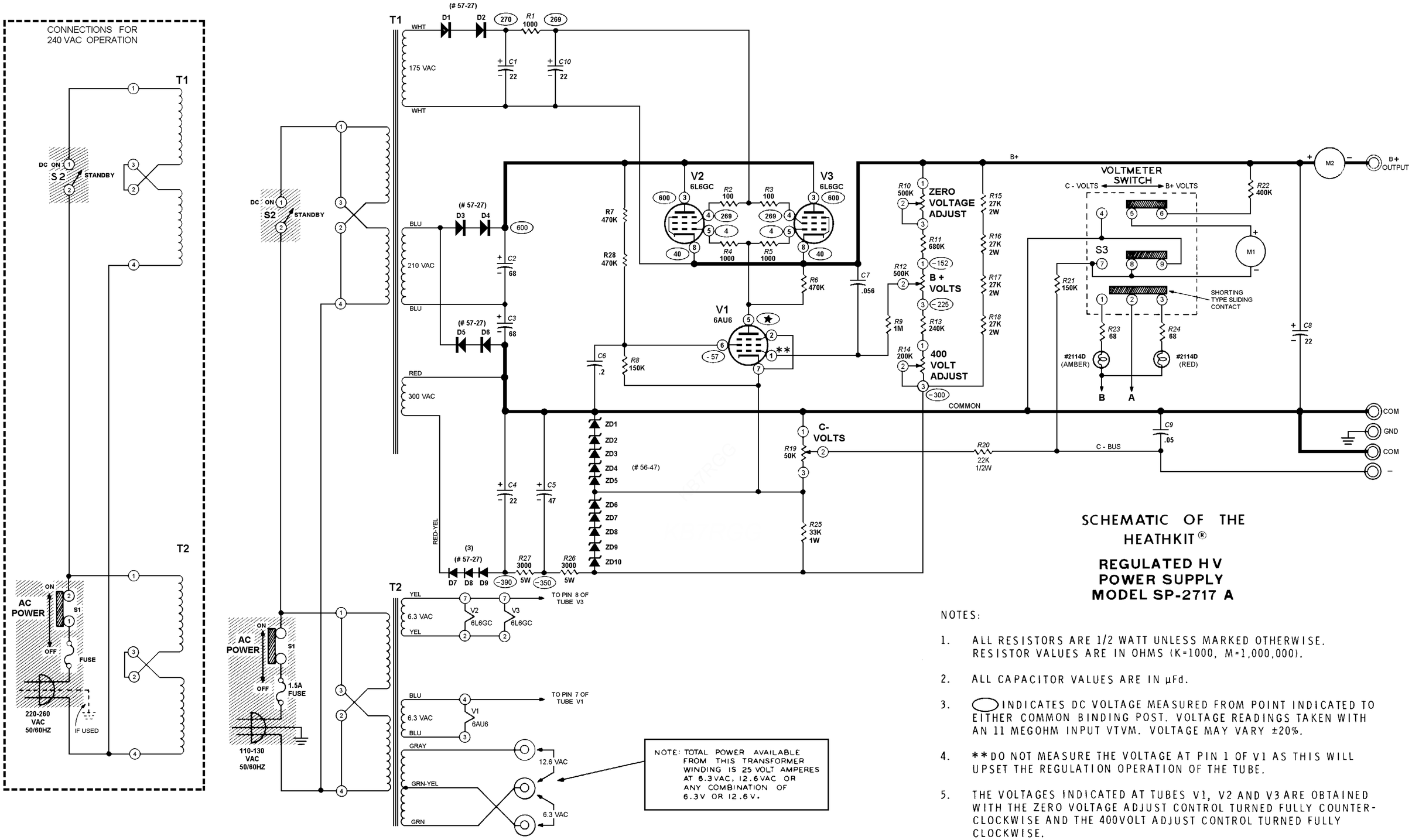

SCHEMATIC OF THE HEATHKIT®

REGULATED HV POWER SUPPLY MODEL SP-2717 A

NOTES:

1. ALL RESISTORS ARE 1/2 WATT UNLESS MARKED OTHERWISE. RESISTOR VALUES ARE IN OHMS (K=1000, M=1,000,000).
2. ALL CAPACITOR VALUES ARE IN µFd.
3. ⬭ INDICATES DC VOLTAGE MEASURED FROM POINT INDICATED TO EITHER COMMON BINDING POST. VOLTAGE READINGS TAKEN WITH AN 11 MEGOHM INPUT VTVM. VOLTAGE MAY VARY ±20%.
4. ** DO NOT MEASURE THE VOLTAGE AT PIN 1 OF V1 AS THIS WILL UPSET THE REGULATION OPERATION OF THE TUBE.
5. THE VOLTAGES INDICATED AT TUBES V1, V2 AND V3 ARE OBTAINED WITH THE ZERO VOLTAGE ADJUST CONTROL TURNED FULLY COUNTER-CLOCKWISE AND THE 400VOLT ADJUST CONTROL TURNED FULLY CLOCKWISE.
6. ★ VARIES DEPENDING ON THE VOLTAGE THAT IS APPLIED TO PIN 1.
7. PARTS IN SHADED AREAS ARE CRITICAL FOR CONTINUED SAFETY. REPLACE THEM ONLY WITH PARTS OF THE SAME RATING OR WITH THE PROPER HEATH PARTS.