MOTOROLA
HPN1007A (EARLY)

CONTROL BOARD BN-PS-ICO3
No Serial Number

DRAWN BY WB6FLY
JULY 2012

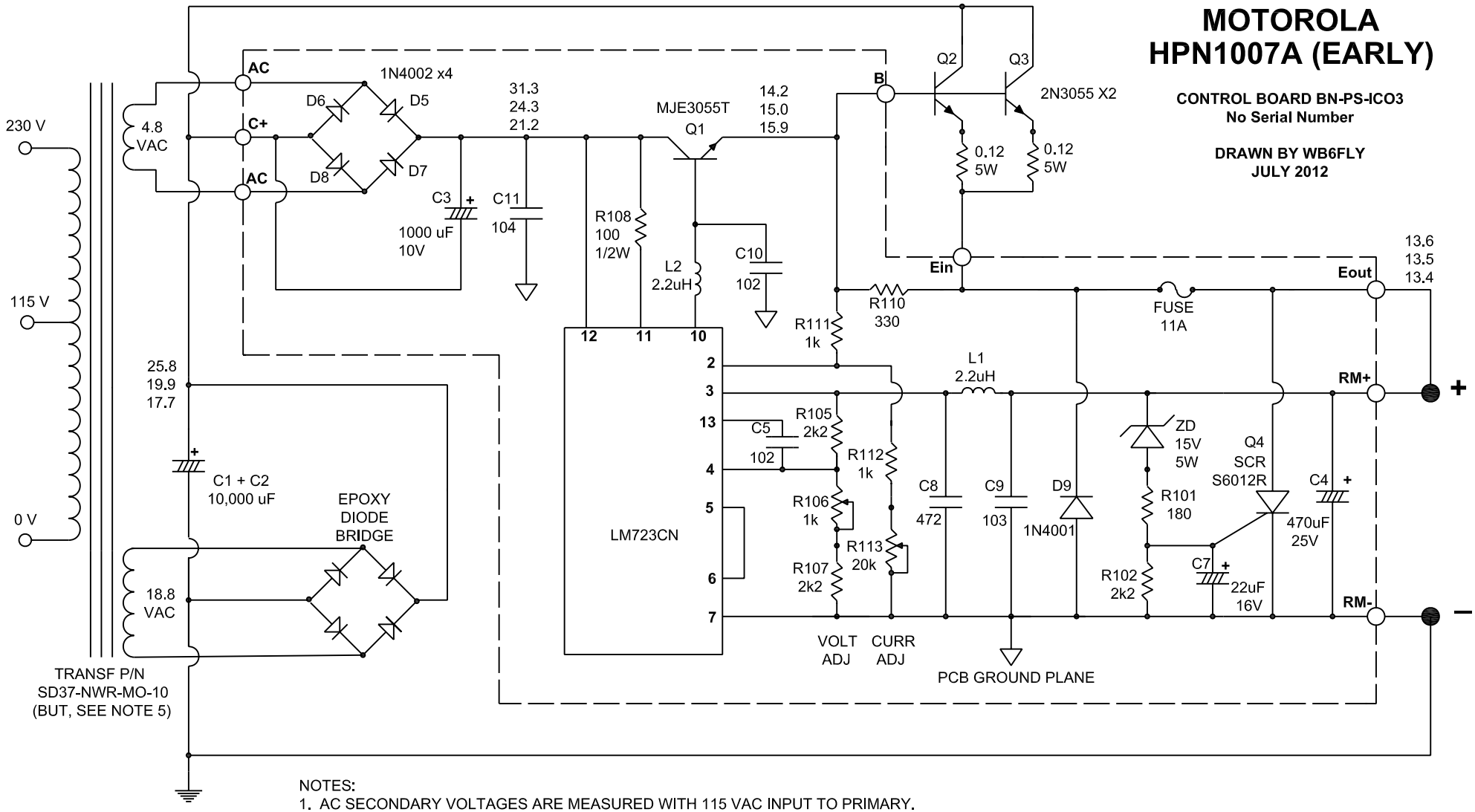

NOTES:
1. AC SECONDARY VOLTAGES ARE MEASURED WITH 115 VAC INPUT TO PRIMARY.
2. DC TEST POINT VOLTAGES ARE AT 0, 5, AND 10 AMPS LOAD, RESPECTIVELY, AND RELATIVE TO NEGATIVE TERMINAL.
3. THIS POWER SUPPLY WAS DESIGNED AND MANUFACTURED BY STEED MAGNETICS, AND IS UNRELATED TO ANY ASTRON PRODUCT.
4. SMALL CAPACITOR VALUES ARE IN pF; 102 = 1000 pF = 1 nF = 0.001 uF.
5. THE SAME PART NUMBER IS USED ON A TRANSFORMER WITH DIFFERENT SECONDARIES.
6. THE HPN1007 POWER SUPPLY IS A REPLACEMENT FOR THE TPN1136A UNIT, AND IS RATED 5A CONTINUOUS AND 10A SURGE.