この回路図はシリアルナンバー150000から適用されます。

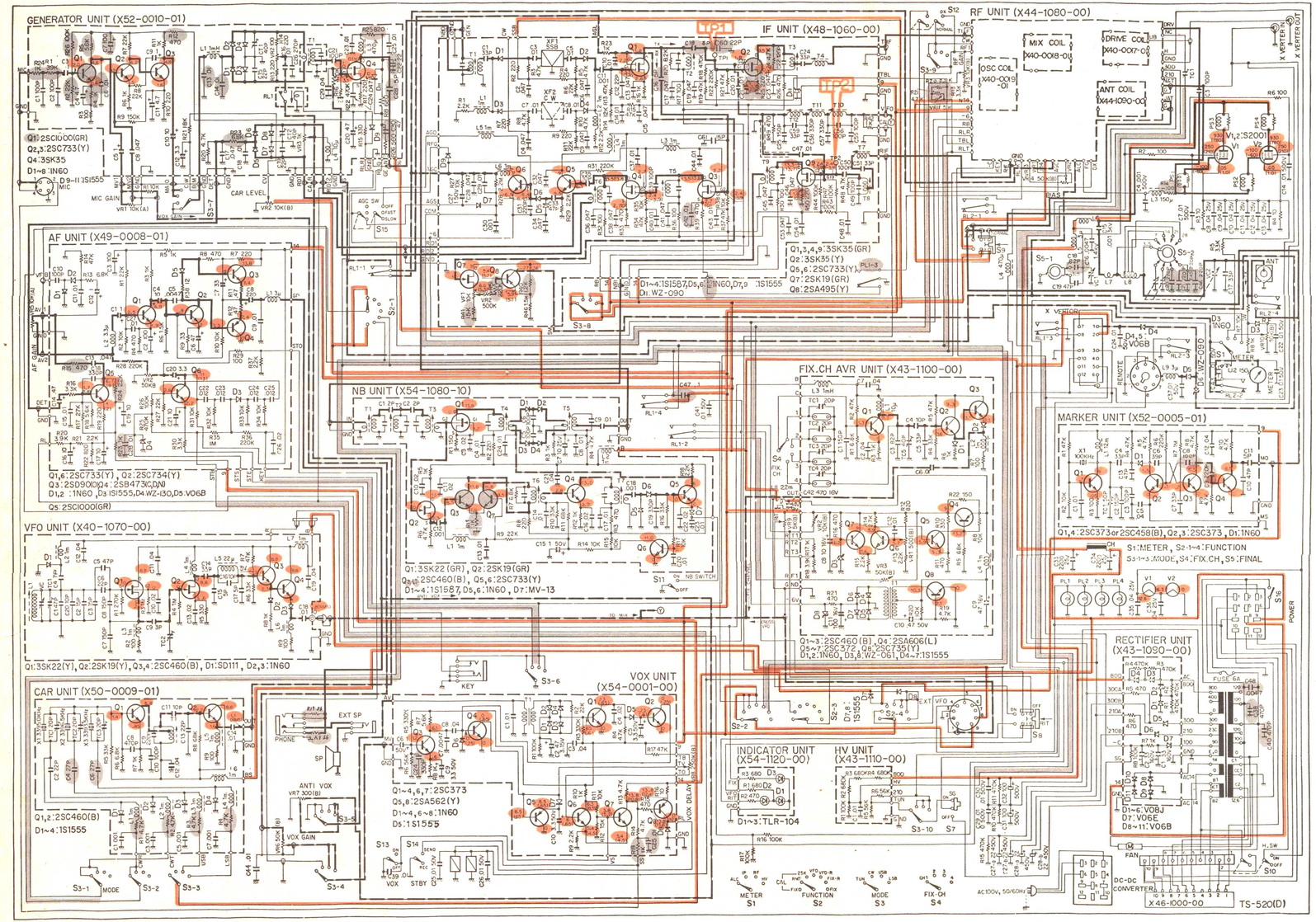

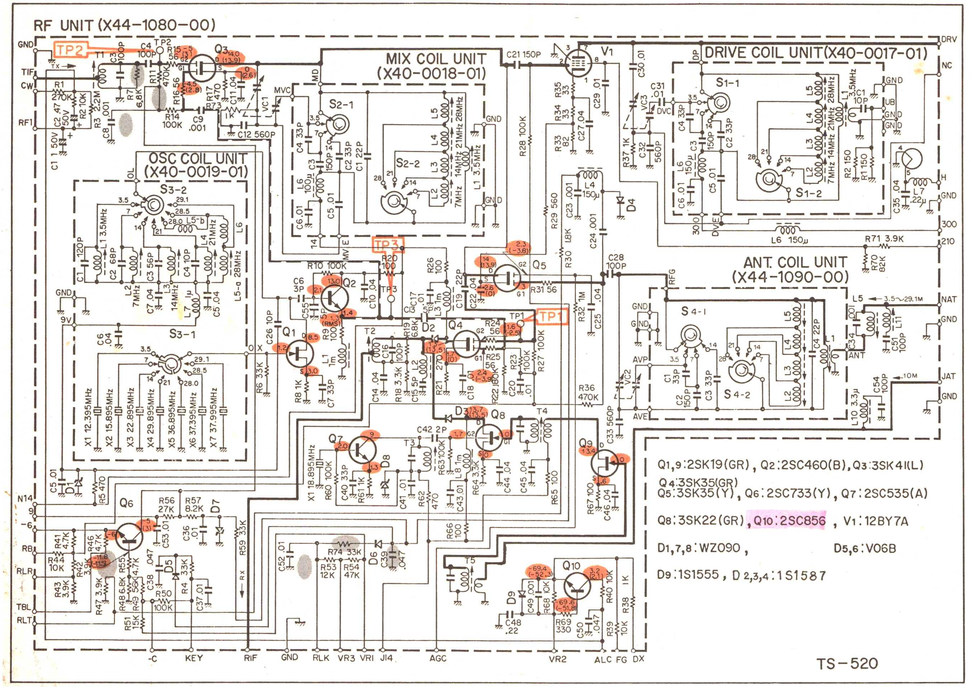

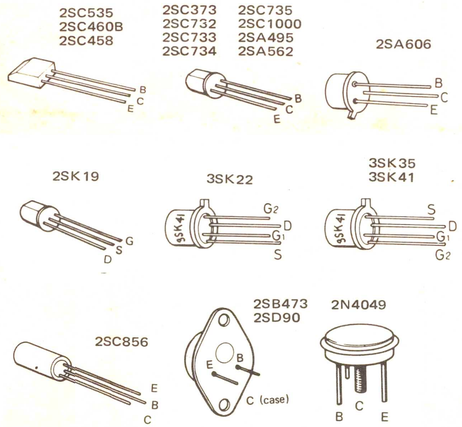

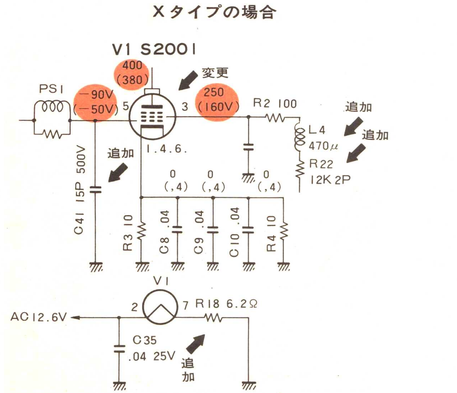

RF UNIT (X44-1080-00)

MIX COIL UNIT (X40-0018-01)

DRIVE COIL UNIT (X40-0017-01)

OSC COIL UNIT (X40-0019-01)

ANT. COIL UNIT (X44-1090-00)

Q1,9:2SK19(GR), Q2:2SC460(B), Q3:3SK41(L)
Q4:3SK35(GR)
Q5:3SK35(Y), Q6:2SC733(Y), Q7:2SC535(A)
Q8:3SK22(GR), Q10:2SC856, V1:12BY7A
D1,7,8:WZ090, D5,6:V06B
D9:1S1555, D2,3,4:1S1587

TS-520

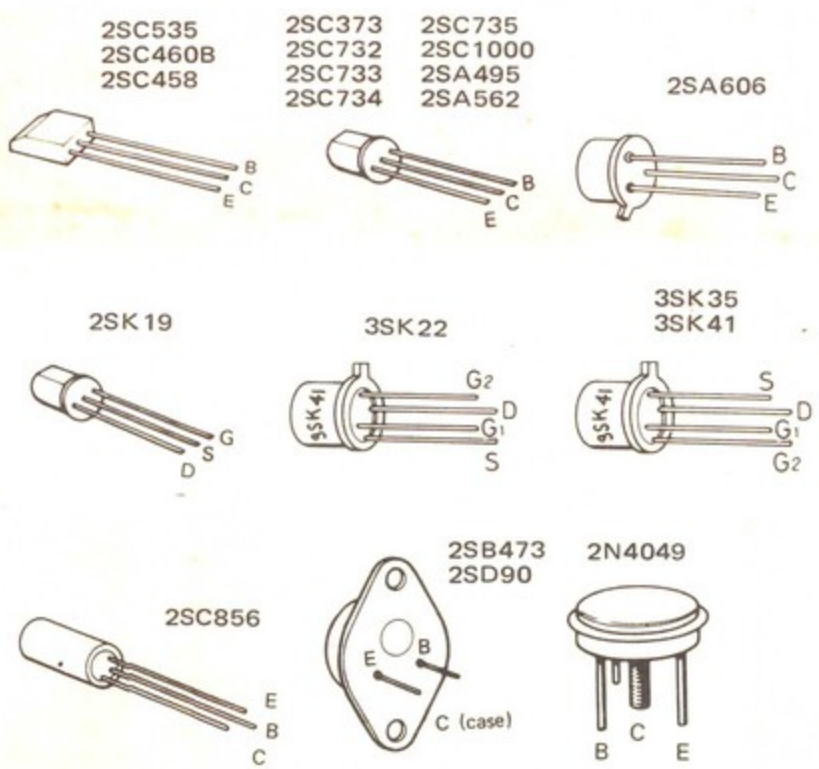

Xタイプの場合

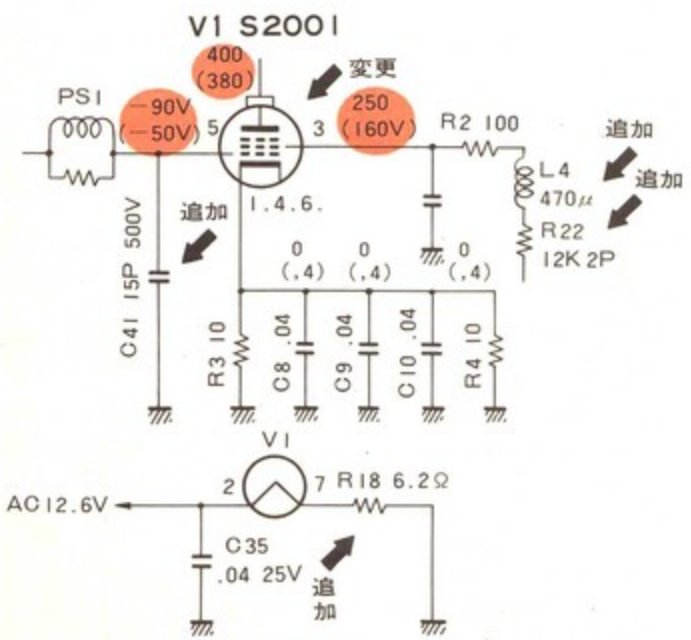

I have an original TS-520V 10W which I was looking to restore and maybe mod for 2nd tube and 100W. I come across a schematic for TS-520D (100W) but also include the TS-520X on the side, I believe is exactly what Terry said just visual.
Attached here (look bottom left side)

Xタイプの場合 => "For X Type"
変更 => "Changed"
追加 => "Additional Component"

Hope helps

--
73
Emilio, JK1MBT