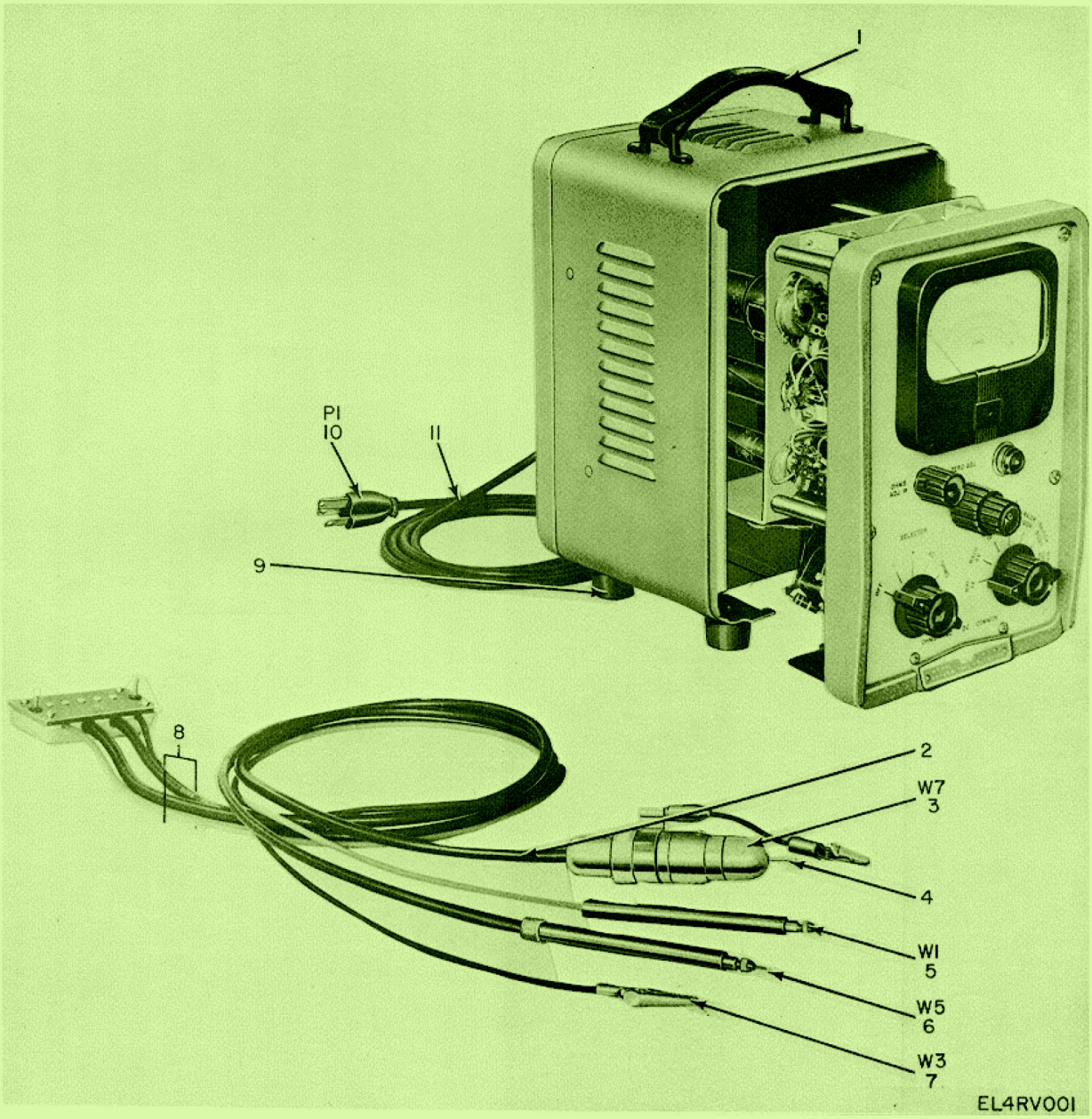

TM 11-6625-200-15

MULTIMETERS ME-26A/U ME-26B/U, ME-26C/U AND ME-26D/U

TECHNICAL MANUAL

TB 11-6625-624-35

CALIBRATION PROCEDURE FOR
ELECTRONIC VOLTIMETER
ME-262/U

TM 11-6625-200-24P

ORGANIZATIONAL, DIRECT SUPPORT, AND GENERAL SUPPORT MAINTENANCE
REPAIR PARTS AND SPECIAL TOOLS LISTS
(INCLUDING DEPOT MAINTENANCE REPAIR PARTS AND SPECIAL TOOLS)

TM 11-6625-200-15

DEPARTMENT OF THE ARMY TECHNICAL MANUAL

OPERATOR, ORGANIZATIONAL, DS, GS

AND DEPOT MAINTENANCE MANUAL

MULTIMETERS ME-26A/U

ME-26B/U, ME-26C/U

AND ME-26D/U

This copy is a reprint which includes current pages from changes 1 through 3

HEADQUARTERS, DEPARTMENT OF THE ARMY

MARCH 1968

WARNING

RADIATION HAZARD

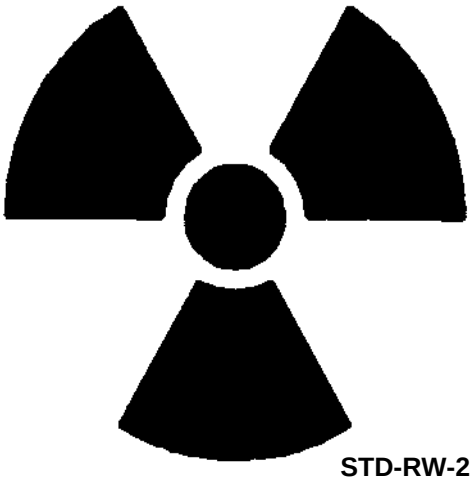

STD-RW-2

C_O 60

Tube type 0B2 used in this test set contains radioactive material. This tube is potentially hazardous when broken; see qualified medical personnel and the Safety Director if you are exposed to or cut by broken tubes. Use extreme care in replacing this tube and follow safe procedures in its handling, storage, and disposal.

Never place radioactive tubes in your pocket.

Use extreme care not to break radioactive tubes while handling them.

Never remove radioactive tubes from cartons until ready to use them.

WARNING

The fumes of TRICHLOROETHANE are toxic. Provide thorough ventilation whenever it is used; avoid prolonged or repeated breathing of vapor. Do not use near an open flame or hot surface; trichloroethane is non flammable but heat converts the fumes to a highly toxic phosgene gas. The inhalation of this gas could result in serious injury or death. Prolonged or repeated skin contact with trichloroethane can cause skin inflammation. When necessary, use gloves, sleeves, and aprons which the solvent cannot penetrate.

Technical Manual
No. 11-6625-200-15

HEADQUARTERS
DEPARTMENT OF THE ARMY
Washington, D.C., *22 March 1968*

Operator, Organizational, Direct Support, General Support, and Depot Maintenance Manual

MULTIMETERS ME-26A/U, ME-26B/U, ME-26C/U, AND ME-26D/U

			Paragraph	Page
B/U,				
Chapter	1	INTRODUCTION		
Section	I	General	1-1—1-3	1-1
	II	Description and data	1-4—1-8	1-1
Chapter	2	SERVICE UPON RECEIPT OF EQUIPMENT	2-1—2-4	2-1
	3	OPERATING INSTRUCTIONS		
Section	I	Controls and indictors	3-1, 3-2	3-1
	II	Operation	3-3—3-10	3-5
Chapter	4	MAINTENANCE INSTRUCTIONS	4-1—4-11	4-1
	5	FUNCTIONING		
Section	I	Block diagram analysis	5-1—5-4	5-1
	II	Circuit analysis	5-5—5-10	5-4
Chapter	6	TROUBLESHOOTING		
Section	I	General troubleshooting techniques	6-1, 6-2	6-1
	II	Troubleshooting Multimeter ME-26(*)/U	6-3—6-7	6-14
Chapter	7	REPAIRS AND ALIGNMENT		
Section	I	Repair	7-1—7-4	7-1
	II	Changes to Multimeters ME-26B/U and ME-26C/U to prevent shock hazard	7-5—7-7	7-4
	III	Alignment	7-8—7-12	7-7
Chapter	8	GENERAL SUPPORT TESTING PROCEDURES	8-1—8-9	8-1
	9	SHIPMENT, LIMITED STORAGE, AND DEMOLITION TO PREVENT ENEMY USE		
Section	I	Shipment and limited tore	9-1, 9-2	9-1
	II	Demolition of materiel to prevent enemy use	9-3, 9-4	9-1
Appendix	A	REFERENCES		A-1
	B	BASIC ISSUE ITEMS LIST (BIIL) AND ITEMS TROOP INSTALLED OR AUTHORIZED LIST (ITIAL) (Not Applicable)		
	C	MAINTENANCE ALLOCATION		C-1
Index				I-1

*This manual supersedes TM 11-6625-200-12, 13 February 1959, Including all changes, and TM 11-6625-200-35, 15 January 1980, Including all changes.

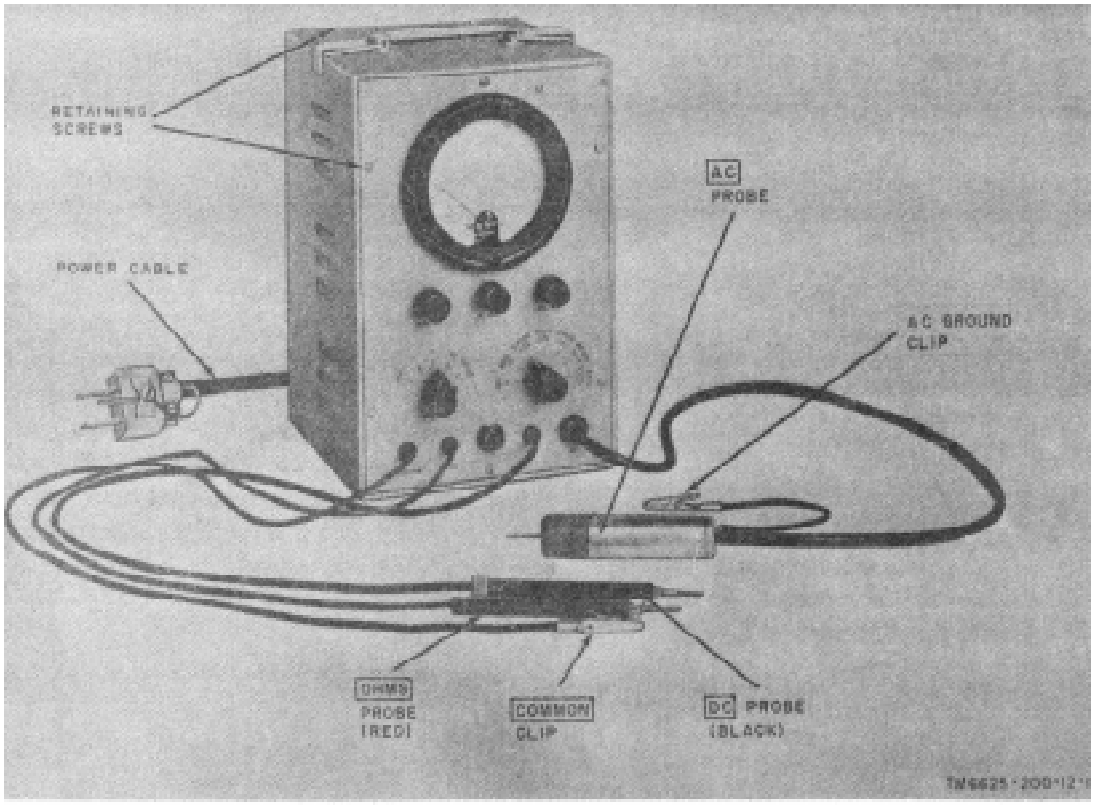

Figure 1-1. Multimeter ME-26B/U, less running spares.

CHAPTER 1
INTRODUCTION

1-1. Scope

a This manual describes Multimeter ME-26(*)/U (multimeter) and covers the installation, operation, organizational, general support, and depot maintenance of these equipments It includes operation under unusual conditions, and replacement of parts available to the organizational, general support, and depot maintenance personnel. It also lists the tools and test equipment available to organizational, general support, and depot maintenance personnel.

b. Official nomenclature followed by (*) is used to designate all models of the equipment covered in this manual; therefore, Multimeter ME[26(*)/U represents Multimeters ME-26A/U, ME-26B/U, ME-26C/U, and ME-26D/U.

1-2. Indexes of Publications

a. DA Pam 310-4. Refer to the latest issue of DA Pam 310-4 to determine whether there are new editions, changes, or additional publications pertaining to the equipment.

b. DA Pan 310-7. Refer to DA Pam 310-7 to determine whether there are modification work orders (MWO's) pertaining to the equipment.

1-3. Forms and Records

a. Reports of Maintenance and Unsatisfactory Equipment Maintenance forms, records, and reports which are to be used by maintenance personnel at all maintenance levels are listed in and prescribed by TM 38-750.

b. Report of Packaging and Handling Deficiencies. Fill out and forward DD Form 6 (Packaging Improvement Report) as prescribed in AR 700-58/NAVSUPINST 4030.29/AFR 71-13/MCO P4030.29A, and DLAR 4145.8.

c. Discrepancy in Shipment Report (DISREP) (SF 361). Fill out and forward Discrepancy in Shipment Report (DISREP) (SF 361) as prescribed in AR 55-88/NAVSUPINST 4610.33B/AFR 75-18/MCO P4610.19C and DLAR 4500.15.

1-3.1. Reporting of Errors and EIR's

a The reporting of errors, omissions, and recommendations for improving this publication by the individual user is encouraged. Reports should be submitted on DA Form 2028 (Recommended Changes to Publications and Blank Forms) and forwarded direct to Commander, US Army Communications and Electronics Materiel Readiness Command, ATTN: DRSEL-ME-MQ, Fort Monmouth, NJ 07708.

b. Equipment Improvement Recommendations (EIR) will be prepared using SF 368 (Quality Deficiency Report) Instructions for preparing EIR's are provided in TM 38-750, the Army Maintenance Management System EIR's should be mailed direct to Commander, US Army Communications and Electronics Materiel Readiness Command, ATTN: DRSEL-ME. MQ, Fort Monmouth, NJ 07703. A reply will be furnished direct to you.

Section II. DESCRIPTION AND DATA

1-4. Purpose and Use (fig. 1-1, 1-2)

a Multimeter ME-26(*) U is an electron tube multimeter voltmeter-ohmmeter) that is used to measure direct current (dc) voltage, resistance, and alternating current (ac) voltage at frequencies from 20 cycles per second (cps) to 700 megacycles per second (mc).

b. When the multimeter is used as a voltmeter, the high input impedance permits measurements to be made without affecting either the voltage being tested or the operation of the equipment under test.

1-5. Technical Characteristics

Voltage ranges:

Dc	0 to 1 volt
	0 to 8 volts
	0 to 10 volts
	0 to 00 volts
	0 to 100 volts
	0 to 300 volts
	0 to 1,000 volts
Ac	0 to 1 volt
	0 to 3 volts
	0 to 10 volts
	0 to 30 volts
	0 to 100 volts
	0 to 300 volts
Resistance range	0 to 500 ohms
	0 to 5,000 ohms
	0 to 50,000 ohms
	0 to 500,000 ohms
	0 to 5 megohms
	0 to 500 megohms
Frequency range (ac voltage)	20 cps to 700 mc
Frequency range (AC probe)	Flat within ±1 db from 20 cps to 700 mc on ME-26A/U; and fiat within ± 1 db from 20 cps to 800 mc and ±2 db from 20 cps to 700 mc on all other models

Input impedance:

Dc	122 megohm

Ac .....10 megohms below 100 kc, more than 01 me-ohm at 100 me, and 0.01 megohm at 700 me

Accuracy:

Dc .....±3 percent of full-scale value on all ranges

Ac .....±3 percent of full-scale value on all ranges for sinusoidal input (midfrequency range-

NOTE

The meter scales are calibrated to indicate 0707 of the peak voltage of a sine wave For a sine wave, the meter indication is the rms value of the sine wave, but for a complex wave, the meter indication is not the rms value of the complex wave

Resistance.....±10 percent at center scale on RX1 range.
±5 percent at center scale on all other ranges

Number of tube.....5

Line-voltage input .....115 or 280 volts, single phase, 50 to 1,000 cps

Power consumption 40 watts

1-6. Items Comprising an Operable Equipment

Multimeter, Meter ME-26A/U (NSN 6625-

Item	*ME-226A/U*
Dimension	12 by 7 3/8 by 8
Weight	11 1/4 lb
Switch (ON-OFF) and function selector	SELECTOR
Test leads	Connected to detachable connector, brought out through bottom of chassis.

00-360-2493), Multimeters, Meter ME-26B/U, ME-26C/U (NSN 6625-00-646-9409), and Multimeter, Meter ME-26D/U (NSN 6625-00-913-9781) comprise operable equipments.

1-7. Description

The multimeter (figs. 1-1 and 1-2) consists of a chassis (figs. 3-1, 3-2, 4-1, and 4-2) contained in a metal case. All operating controls (figs. 3-2 and 3-3), the meter, and the pilot lamp are mounted on the front panel. The ME-26A/U test leads are mounted on a detachable connector and are attached to the underside of the multimeter. The ME-26B/U, the ME-26C/U, and the ME-26D/U test leads are permanently attached to the chassis and extend through the front panel. The ME-26B/U, the ME-26C/U, and the ME-26D/U power cables are contained in a storage compartment in the case. A rear cover is provided to reach the power cable, the fuse, and the storage compartment. The power cable and the fuse can be reached on the back of the ME-26A/U.

1-8. External Differences in Models

Multimeters ME-26A[U, ME-26B/U, ME-26C/U, and ME-26D/U are similar in purpose and operation. External differences are listed below.

ME-26C/U and ME-26D/U	*M-26B/U*
11 by 7 1/8 by 7V4	11 by 7 by 7½
11½ lb	11 ½ lb
FUNCTION	FUNCTION
Permanently attached, bought out through front of panel.	Permanently attached, brought out through front of panel

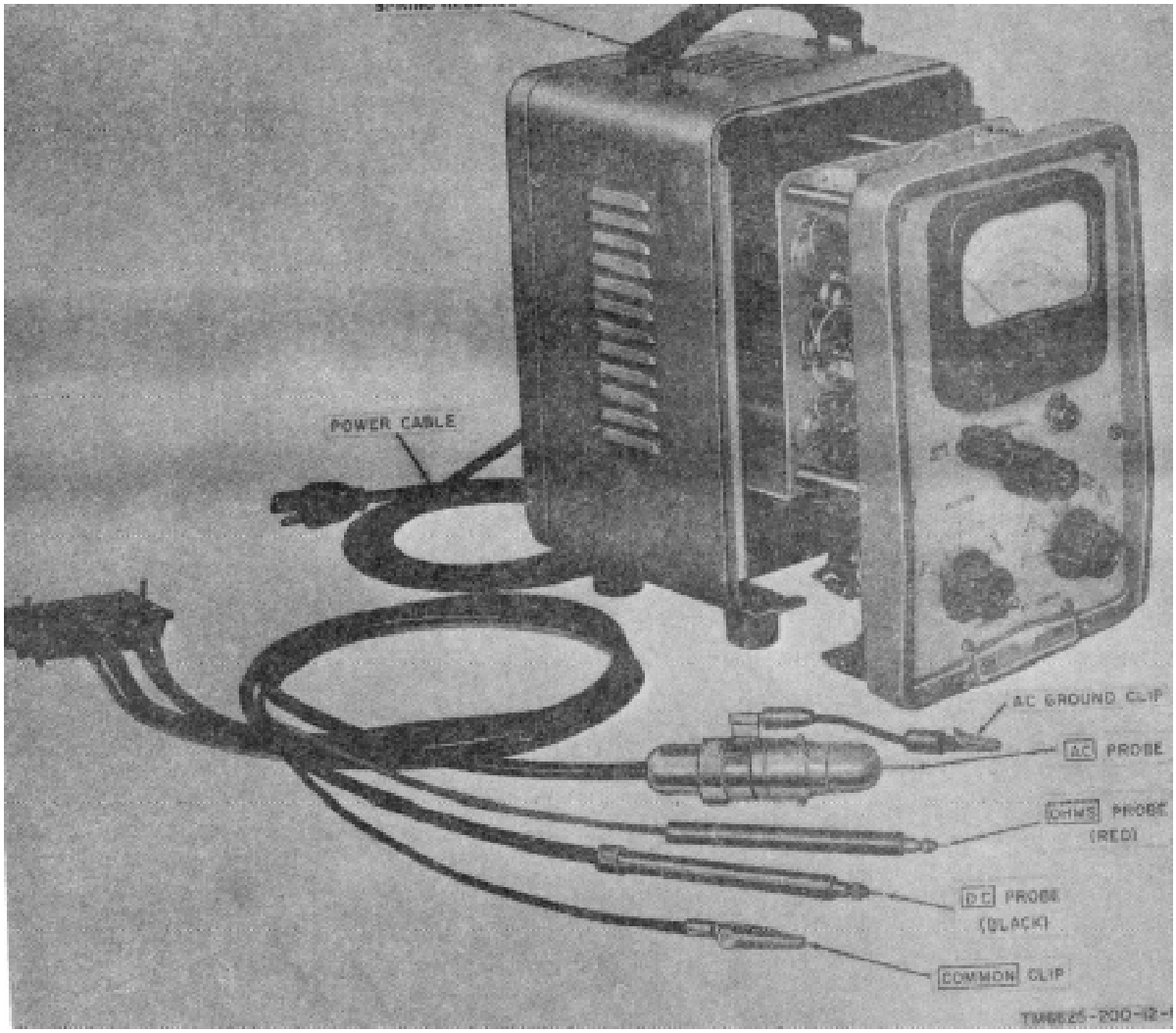

Figure 1-2. Multimeter ME-26A/U, withdrawn from cabinet, lens running spares.

CHAPTER 2

SERVICE UPON RECEIPT OF EQUIPMENT

2-1. Unpacking

a. Packaging Data. The multimeter is packed for shipment in a corrugated carton; the dimensions of the equipment package are 14 1/2 by 10 3/4 by 10 1/4 inches; the weight is 14 pounds and the volume is 0.93 cubic foot. The running spares are packed in a separate corrugated carton; the dimensions are 3 by 2 5/8 by 2 5/8 inches.

b. Unpacking Multimeter (fig. 2-1).

(1) Open the corrugated carton and fold back the top flaps.

(2) Remove the envelope that contains the technical manuals; open the envelope and remove the technical manuals.

(3) Remove the top pad, the rear pad, the left and right side pads, and the front frame.

(4) Remove the multimeter from the corrugated carton.

c. Unpacking Running Spares (fig. 2-2).

(1) Open the corrugated carton and fold back the top flaps.

(2) Remove the running spares from the carton.

(3) Store the running spares in the storage compartment of the multimeter (para 2-2d).

2-2. Checking Unpacked Equipment

a. Inspect the equipment for damage. If the equipment has been damaged, refer to paragraph 1-8.

b. Check the equipment against the packing list. If the equipment is incomplete, refer to procedures given in paragraph 1-3.

c. Check to be sure that the test leads are firmly attached to the front of the multimeter.

d. Store the running spares in Multimeters (ME-26B/U, ME-26C/U, and ME-26D/U) in the rear storage cavity and check the power cable as follows: (1) Remove the rear cover by giving each of the fasteners a one-quarter turn.

(2) Check to be sure that the power cable is folded in the storage compartment, and the cable is held firmly by the grommet in the rear of the chassis.

(3) Place the running spares in the storage compartment.

(4) If the multimeter is not to be used immediately, replace the rear cover.

2-3. installation of Multimeters ME-26B/U, ME-26C/U, and ME-26D/U

NOTE

The multimeter normally is wired for operation from a 115-volt ac power source.

To operate the multimeter from a 230-volt ac power source, follow the procedures given in a below. To reconnect the multimeter for operation from a 115-volt ac power source, follow the procedures given in b below.

a. Connection for 230-Volt Operation.

(1) Remove the rear cover by giving each of the fasteners a one-quarter turn.

(2) Remove the retaining screws (fig. 1-1) from the front panel, the top of the case, and the rear crosspiece.

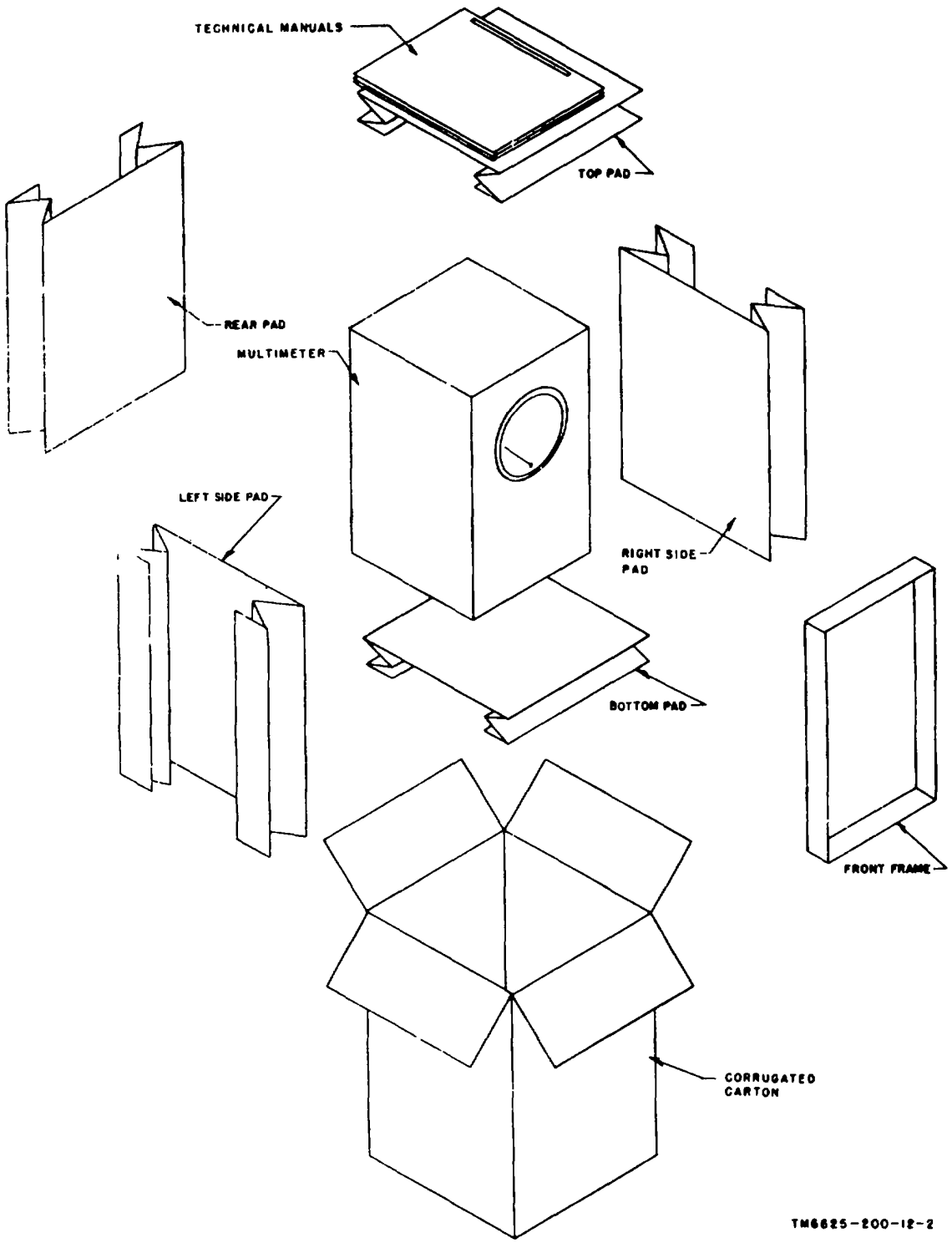

Figure 2-1. Multimeter, packing diagram.

(3) Remove the chassis by gently sliding it forward out of the case, while lifting the power cable from the groove in the rear crosspiece.

(4) Remove the jumper which connects the first (rear) terminal on the bottom row of terminal board TB2 (fig. 3-1) and the second (next to rear) terminal on the top row; also remove the jumper which connects the second terminal on the bottom row and the third terminal on the top row.

(5) Connect a jumper from the first to the second terminal on the bottom row of terminal board TB2.

(6) Slide the chassis back into the case and replace the retaining screws.

(7) Replace the 1.5-ampere fuse with a ¾ ampere fuse.

(8) Replace the rear cover.

b. Connection for 115-Volt Operation.

(1) Perform the procedures given in a(1), (2), and (3) above.

(2) Remove the jumper which connects the first (rear) and second terminals on the bottom row of terminal board TB2 (fig. 3-1).

(3) Connect a jumper from the first terminal on the bottom row to the second (next to rear) terminal on the top row.

(4) Connect a jumper from the second terminal on the bottom row to the third terminal on the top row.

(5) Slide the chassis back into the case and replace the retaining screws.

(6) Replace the S/3-ampere fuse with a 1.5-ampere fuse.

(7) Replace the rear cover.

2-4. Installation of Multimeter ME-26A/U

Note. **The multimeter is normally wired for operation from a 115-volt power source.**

To operate the Multimeter ME-6A/U from a 230-volt ac power source, follow the procedures given in a below. To reconnect the ME-26A/U for operation from a 115-volt ac power source, follow the procedures given in b below.

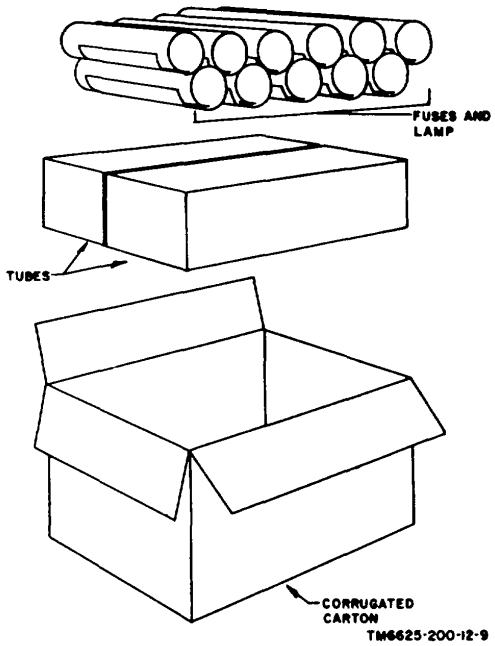

Figure 2-2. Running spares packing diagram.

a. Connection for 230-Volt Operation.

(1) Remove the rear cover by pressing the spring-release button on the top rear of the case (fig. 1-2).

(2) Remove the retaining screws that hold the main chassis to the cabinet (3) Remove the chassis by gently sliding it forward out of the case.

(4) Remove the leads that connect terminals 1 to 2, and 4 to 5 of terminal board TB3 (fig. 3-2).

(5) Connect terminals 2 and 4 together.

(6) Replace the 1.5-ampere fuse with a 3/4 ampere fuse (fig. 4-2).

(7) Slide the chassis back into the cam and replace the retaining screws.

b. Connection for 115-Volt Operation.

(1) Perform the procedures given in a(1), (2), and (8) above.

(2) Remove the lead that connects terminal 2 to terminal 4 on terminal board TB3 (fig. 3-2).

(3) Connect terminal 1 to 2 and terminal 4 to 5.

(4) Replace the %4-ampere fuse with a 1.5 ampere fuse (fig. 4-2).

(5) Slide the chassis beck into the case and replace the retaining screws.

c. Connection and Disconnection of Detachable Connector With ME-26A/U Test Leads.

(1) To disconnect test leads from the multimeter chassis, remove the two connector retaining screws located on the bottom of the chassis.

(2) To reconnect the test leads to the multimeter chassis, turn the multimeter on its side and replace the connector with the test leads facing the front of the chassis. Secure the two retaining screws on either side of the test lead connector.

CHAPTER 3

OPERATING INSTRUCTIONS

Section I. CONTROLS AND INDICATORS

3-1. General

a. Improper setting of the RANGE switch may damage the multimeter. When measuring unknown voltage values, start at the highest range (1,000V dc or 300 ac) and reduce the setting of the RANGE switch one step at a time until the meter pointer indicates near the center of the scale.

b. For accurate ac voltage measurements at frequencies of 100 mc and above, unscrew and remove the end of the plastic nose from the AC probe. Connect a blocking capacitor, approximately 50 micromicrofarads (fief), to the point in the circuit to be measured; contact the other terminal of the capacitor with the exposed AC probe contact point.

3-2. Operating Controls and Indicators (fig. 3-3 and 3-4)

Control or indicator	*Function*
SELECTOR switch (FUNCTION switch on M-26B/U, ME-26C/U, and ME-26D/U).	Turns equipment on and selects mode of operation. *Sw pos* — *Action* OFF----------Removes ac power from multimeter. ----------Sets up multimeter for negative de voltage measurements + ---------Sets up multimeter circuitry for positive de voltage measurements AC -------Sets up multimeter circuitry for ac voltage measurements. OHMS --Sets up multimeter circuitry for resistance measurements
RANGE switch ----------	Selects desired voltage or resistance range.
ZERO ADJ control ----------	Basic zero adjustment; adjusts meter pointer to zero for all types of operation.
AC ZERO control ----------	Adjusts meter pointer to zero for ac voltage measurements.
ZERO ADJ controls (ME-26A/U only)----	Outside control adjusts meter pointer to zero all operations. Inside control adjusts meter pointer to zero for all ac voltage measurements.
OHMS ADJ control.----------	Adjusts meter pointer for full scale deflection for resistance measurements
Meter ----------	Indicates voltage or resistance value being measured.
Pilot lamp ----------	Lights when FUNCTION switch is placed in any position other than OFF to indicate that power is applied to multimeter.

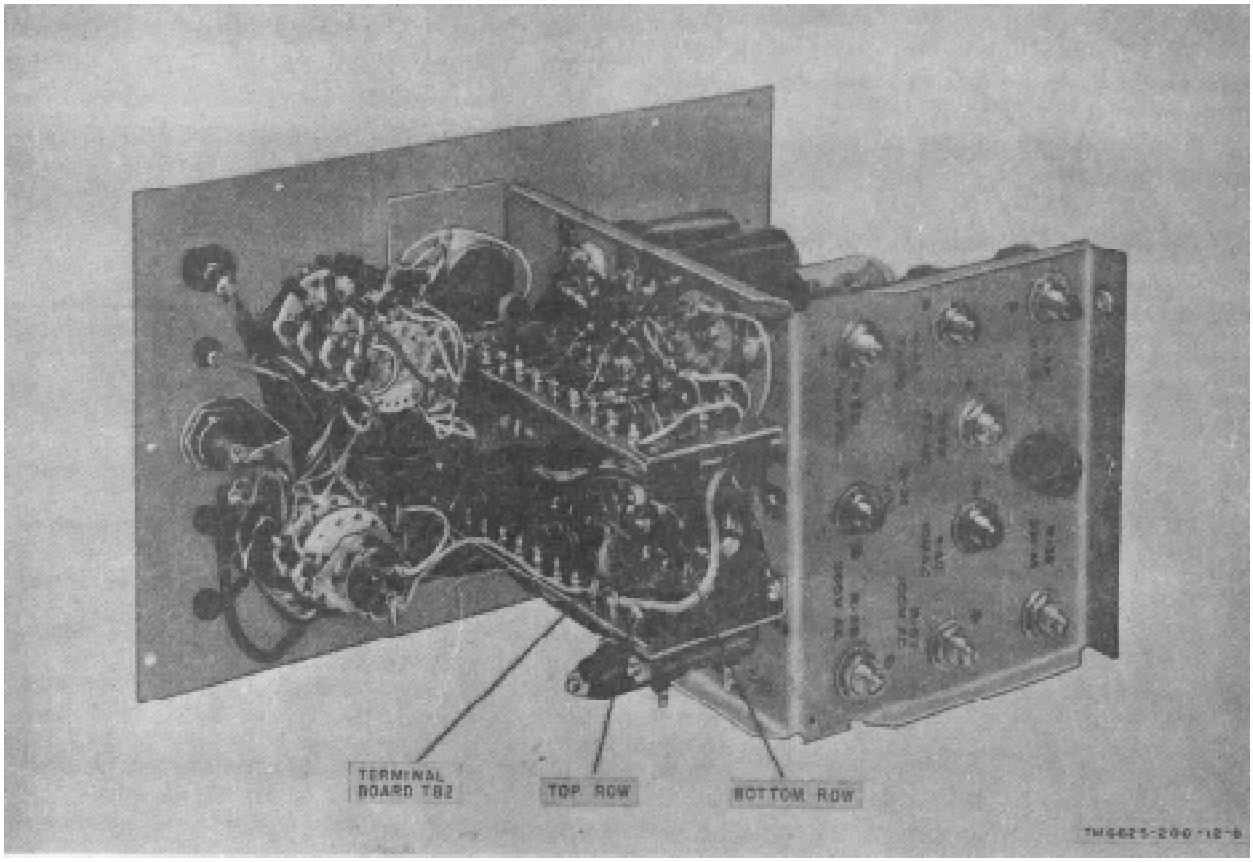

Figure. 3-1. Multimeter ME-16B/U, ME-6C/U, and ME-26D/U chassis, bottom view, showing location of terminal board TB2.

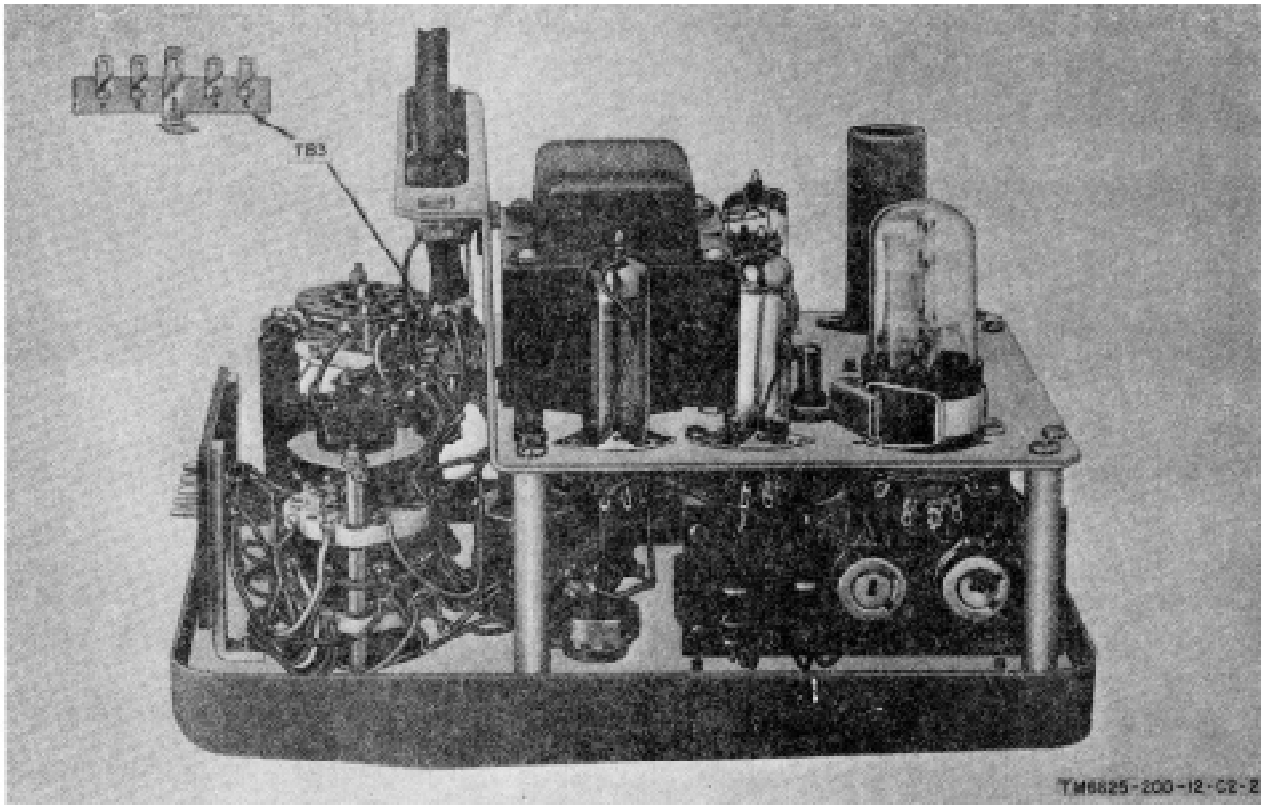

Figure 3-2. Multimeter ME-26A/U chassis, side view, showing location of terminal board TB3.

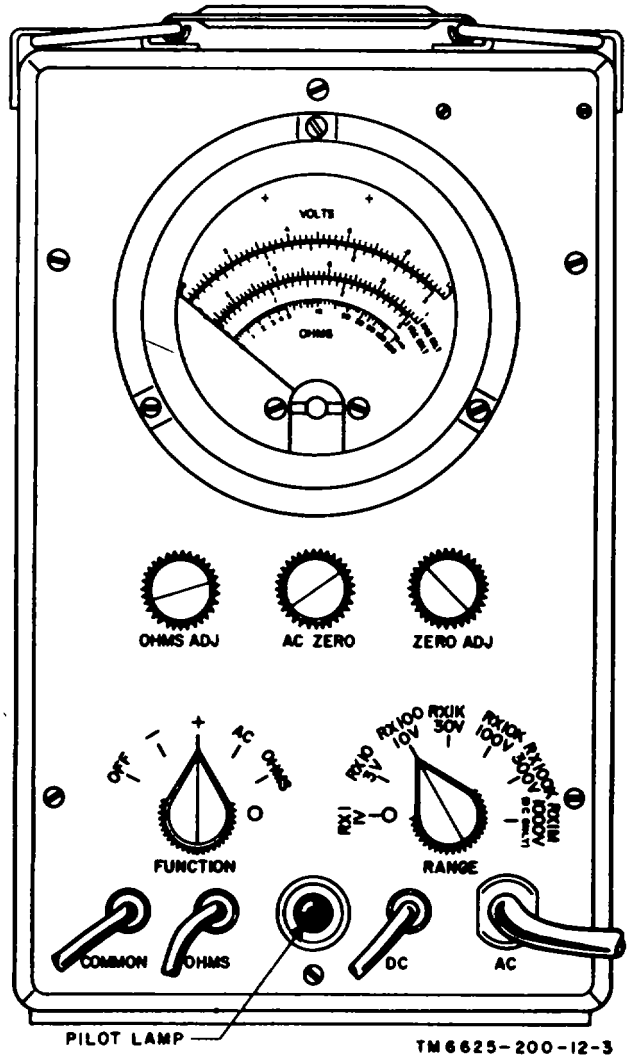

Figure 3-3. Multimeters ME-26B/U, ME-26C/U, and ME-26D/U, operating controls and indicators.

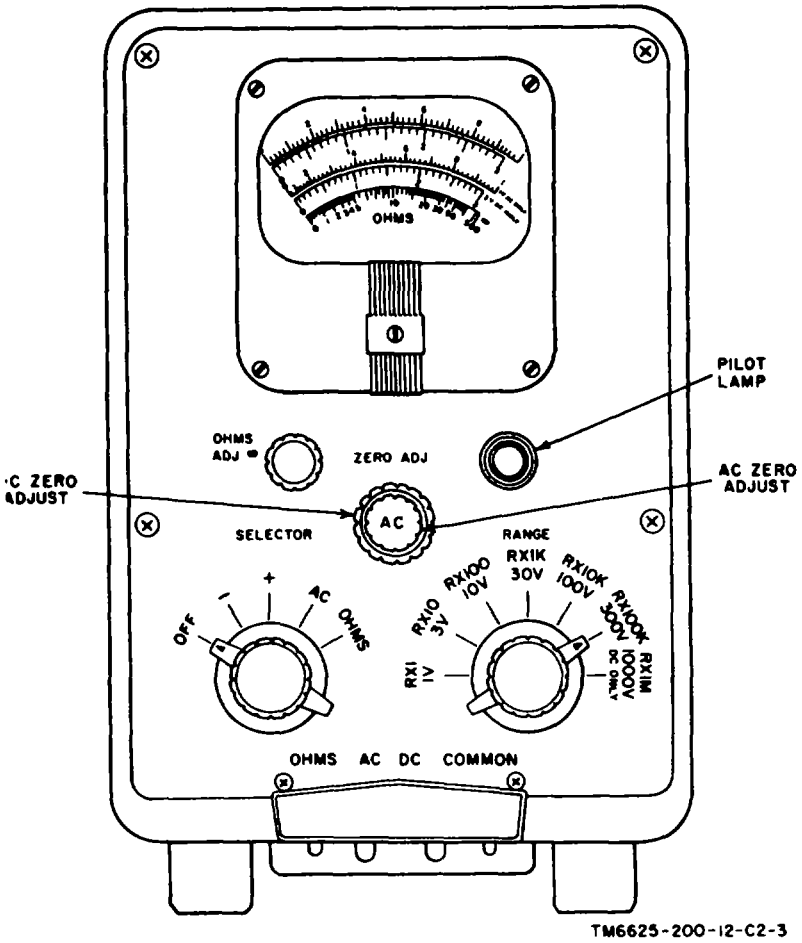

Figure 3-4. Multimeter ME-26A/U operating control and indicators.

Section II.

3-3. Starting Procedure

a. General.

(1) Set the FUNCTION switch (SELECTOR switch on the ME-26A/U) to OFF.

(2) Remove the rear cover (on the ME-26B/U, ME-26C/U and ME-26D/U) by giving each of the fasteners a one-quarter turn.

(3) Remove the power cable from the storage compartment at the rear of the multimeter.

***Caution*: Check the available power source voltage and make sure that the multimeter is internally connected to operate from that source (para 2-3 and 2-4). If the multimeter is improperly connected, damage to the equipment, or wrong meter readings will result.**

(4) Connect the power cable to the power source. Keep the test leads separated to avoid contact when the multimeter is turned on.

(5) Replace the rear cover to allow the power cable to pass through the slot in the cover.

b. Zero Adjustment.

(1) Set the FUNCTION switch (SELECTOR switch on the ME-26A/U) to minus (-); the pilot lamp should illuminate. Allow 5 minutes for the multimeter to warm up.

(2) Set the RANGE switch to 1V.

(3) Connect the COMMON clip (fig. 1-1 and 1-2) to the tip of the DC probe.

(4) Adjust the ZERO ADJ control to position the meter pointer to zero.

(5) Disconnect the COMMON clip from the DC probe.

3-4. Measurement of DC Voltage

***Caution*: When using Multimeters ME-26A/ U, ME-26B/U, and ME-26C/U which have not been changed in accordance with paragraph 7-5, be careful of the shock hazard. Do not connect the COMMON lead to any voltage which is not at ground potential.**

a. the starting procedures (para 3-3).

b. Set the FUNCTION switch (SELECTOR switch on the ME-26A/U) to minus (-) or plus (+), depending on the polarity of the voltage to be measured.

***Caution*: If the voltage to be measured is unknown, set the RANGE switch to 1,000V and, if necessary, reduce the setting of the RANGE switch one step at a time until the meter pointer indicates near the center of the scale.**

c. Set the RANGE switch to the range position that includes the voltage value to be measured and will cause the meter' pointer to deflect near the center of the scale.

d. Observe caution notice below paragraph heading above and connect the COMMON clip to the side of the circuit nearest ground potential.

e. Hold the tip of the DC probe in contact with the point of the circuit to be measured. If the meter pointer deflects to the left (below zero), set the FUNCTION switch (SELECTOR switch on the ME-26A/U) to minus (-) or plus (+), depending on where it had been previously set

f. Read the meter indication.

3-5. Measurement of AC Voltage

***Note*. The meter scales are calibrated to indicate 0.707 of the peak voltage of an ac Nine wave. For a sine wave, the meter indication is the root mean square (rms) value of the sine wave. In a complex wave, the meter indication is not the rms value of the complex wave. For additional information on the measurement of complex waves, refer to paragraph 348.**

***Caution*: When using Multimeters ME-26A/ U, ME-26B/U, and ME-26C/U which have not been changed in accordance with paragraph 7-5, be careful of the shock hazard. Do not connect the COMMON lead or the ac ground clip to any voltage which is not at ground potential.**

a. Voltage Measurements at Frequencies Below 20 Mc.

(1) Perform the starting procedure (para 3-3).

(2) Set the FUNCTION switch (SELECTOR switch on the ME-26A/U) to AC.

(3) Connect the ac ground clip (fig. 1-1 and 1-2) to the tip of the AC probe.

(4) Adjust the AC ZERO control to position the meter pointer on zero.

(5) Disconnect the ac ground clip from the tip of the AC probe.

(6) Set the RANGE switch on the range position that includes the voltage value to be measured and will cause the meter pointer to deflect near the center of the scale.

***Caution*: If the voltage value to be measured is unknown, set the RANGE switch one step at a time until the meter pointer indicates near the center of the scale.**

(7) Observe caution notice below note above and connect the ac ground clip to the side of the circuit nearest ground potential.

(8) Hold the tip of the AC probe in contact with the point of the circuit to be measured.

(9) Read the meter indication.

b. Voltage Measurements at Frequencies Above 20 Mc. To measure voltage at frequencies above 20 mc, follow the procedures given in a above, and observe the following precautions:

(1) Keep) the ac ground clip as close to the point of measurement as possible.

***Caution*: Do not attempt to solder the capacitor to the AC probe contact point; the**

heat will cause permanent damage to the AC probe.

(2) At frequencies of 100 mc and above, unscrew and remove the end of the plastic nose from the AC probe. Connect a blocking capacitor (approximately 50 uuf) to the point in the circuit to be measured. Contact the other terminal of the capacitor with the exposed AC probe contact point.

3-6. Preliminary Data for Pulse Measurements

a. General. For measurement of the positive voltage rise in a pulse, the following characteristics of the pulse generator must be known. This information is used to determine the correction factor (b below) for the measured voltage value.

(1) t, duration of the positive portion of the pulse voltage in microseconds.

(2) t.; duration of the negative portion of the pulse voltage in microseconds.

(3) PRF; pulse repetition frequency in pulses per second.

(4) R.; impedance of the pulse generator in kilohms.

(5) K; pulse generator form factor (c below).

b. Correction Factor. The correction factor for pulse measurements is 1.4 (1 + t,/t, + K/ PRF). The correction factor applies when the PRF is 500 pulses per second or higher, and t, is 10 microseconds or higher.

c. Pulse Generator Form Factor. The pulse generator form factor (K) is determined from the curves shown in figure 3-5. Note that the impedance of the pulse generator (R,) divided by the duration of the positive portion of the pulse voltage (t,) is plotted horizontally, and the pulse generator form factor (K) is plotted vertically. The running parameters indicate the value of K for any value of R,/t, between 0 and 10.

(1) The curve labeled X1 is used when the value of R,/t, is between 0 and 10. When this curve is used, the scale values for R,/t, and K are read directly.

(2) The curve labeled X10 is used when the value of R0/t1 is between 1 and 10. When this curve is used, the scale values for R,/t, and K must be multiplied by 10.

3-7. Pulse Measurements

Measure the positive voltage rise in a pulse by following the procedures given in a below. A numerical example is given in b below.

a. Procedure.

(1) Measure the ac voltage (para 3-5).

(2) Multiply the indicated value of the ac voltage by the correction factor (para 3-6b).

b. Use of Correction Factor.

(1) To determine the pulse voltage value, the measured voltage (a(1) above) is multiplied by the correction factor ($1.4(1+t_1/ t_2 + K/PRF)$). Assume the following values:

t_1, =10 microseconds.

PRF-1,000 pulses per second.

R_0-2 kilohms.

Measured voltage (*a*(1) above = 0.8 volt.

(2) To determine T_2, subtract the time duration of the positive portion of the pulse (t_1,) from the total time available for the pulse. Note that with a PRF of 1,000 pulses per second, the time interval from the start of one pulse to the start of the next pulse is 1,000 microseconds; t_2, =1,000-10=990 microseconds.

(3) To determine K, divide R. by t_1; R_0/ t_1,-2/10-0.2. Apply this value to figure 3-5 and use the curve labeled X1, K=0.55.

(4) Substitute known values in the formula (pulse voltage = measured voltage X correction factor) and solve for the pulse voltage: Pulse voltage .8 X 1.4 (1 + 10/990 + 55/1000)=1.1328 volts.

3-8. Turnover Effect

Note. **The procedure given below applies only to equipment where the equipment ground is not common with the power source ground, directly or through a capacitor.**

Complex ac waveforms may have positive peak values which are different from the negative

peake value. If this condition occurs, the multimeter will indicate a certain reading when the AC probe and ac ground clip are applied to the circuit under test. A different reading will be obtained if the AC probe and ac ground clip of the multimeter are transposed. This condition is referred to as *turnover effect*. If this condition is suspected, use procedures as follows:

a. Make an ac voltage measurement as described in paragraph 3-5. Observe and note the reading of the multimeter.

b. Transpose the connections of the multimeter to the circuit under test. Observe and note the reading of the multimeter.

c. Disconnect the multimeter from the circuit under test.

d. The readings obtained in a and b above may be used to calculate the mean voltage or the actual peak-to-peak voltage of the complex wave. Proceed as follows:

(1) To obtain the mean voltage, add the two readings (a and b above) and divide the sum by 2. The quotient is the mean voltage value.

(2) To obtain the peak-to-peak voltage, multiply each reading *(a* and *b* above) by 1.414 and add the products. The sum is the peak-to peak voltage value.

3-9. Measurement of Resistance

Caution: **Turn off or disconnect the power from the equipment under test when measuring resistance. Damage to the multimeter may result from an external voltage applied to the resistance measurement circuit.**

a. Perform the starting procedure (para 3-3).

b. Set the FUNCTION switch (SELECTOR switch on the ME-26A/U) to OHMS.

c. Adjust the OHMS ADJ control to position the meter pointer at the last scale division (∞) of the ohms scale.

d. Connect the COMMON clip (fig. 1-1 and 1-2) and the OHMS probe to the opposite ends of the resistance to be measured.

e. Set the RANGE switch to the range position which will cause the meter pointer to deflect near the center of the scale.

f. Read the indication on the meter, and multiply it by the factor indicated by the setting of the RANGE switch.

3-10. Stopping Procedure (fig. 3-3 and 3-4)

a. Set the FUNCTION switch (SELECTOR switch on the ME-26A/U) to OFF; the pilot lamp extinguishes.

b. Disconnect the power cable from the power source.

c. If there is no immediate need for the multimeter, remove the rear cover, coil the power cable and place it in the storage compartment, and replace the read cover. On Multimeter ME-26A/U, coil the power cable and test leads around the case.

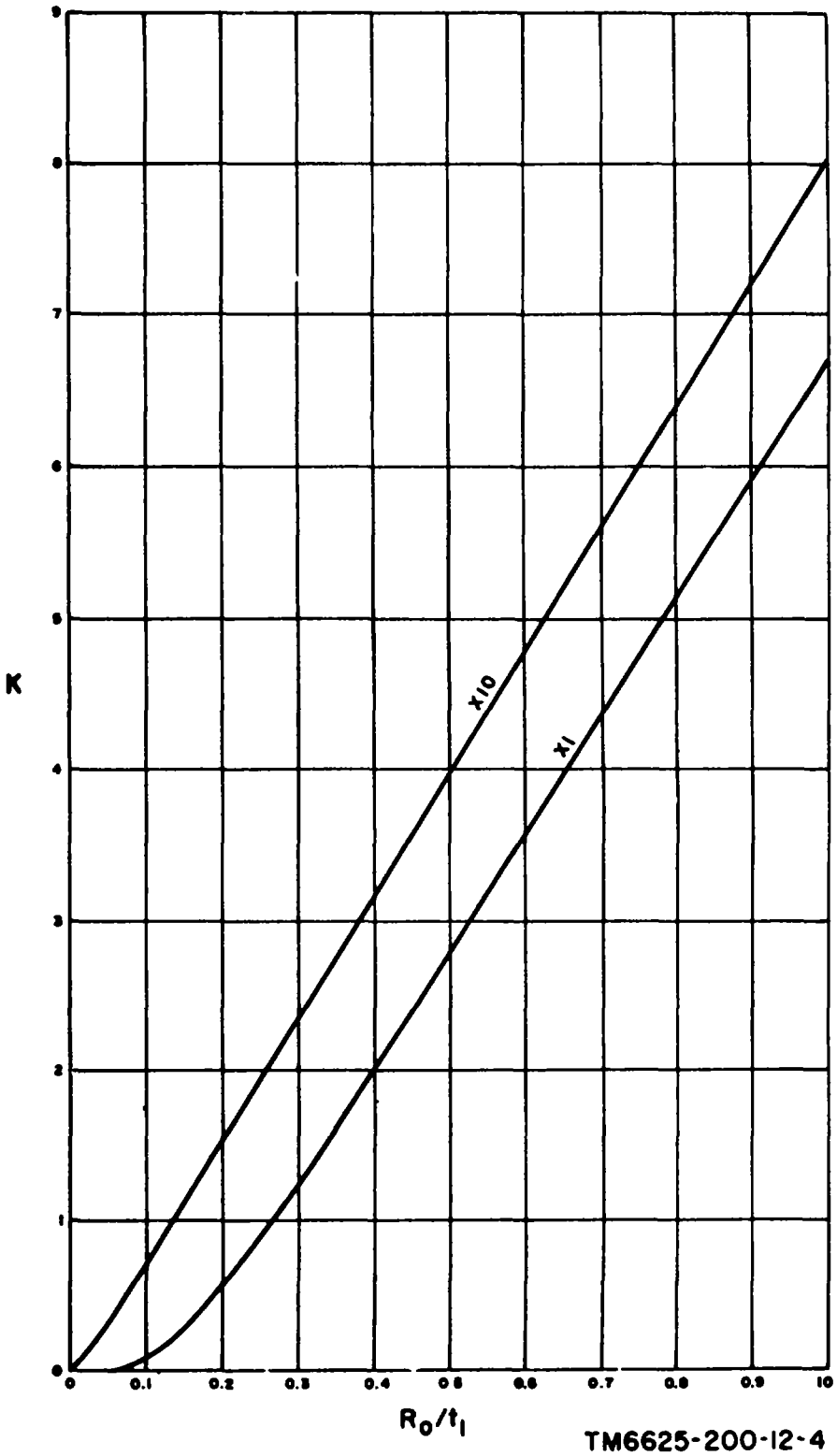

Figure 3-5. Pulse generator from factor curves.

CHAPTER 4

MAINTENANCE INSTRUCTIONS

4-1. Scope of Maintenance

a. The maintenance duties assigned to the operator of the multimeter are listed below, together with a reference to the paragraphs covering the specific maintenance functions. The duties assigned do not require tools or test equipment other than those issued with the equipment.

(1) Operator's daily preventive maintenance checks and services (para 4-4).

(2) Operator's weekly preventive maintenance checks and services (para 4-5).

(3) Cleaning (para 4-7).

b. The maintenance duties assigned to the organizational maintenance repairmen of the multimeter are listed below, together with a reference to the paragraphs covering the specific functions. The duties assigned do not require tools or test equipment other than those normally assigned because of the assigned mission.

(1) Organizational monthly preventive maintenance checks and services (para 4-6).

(2) Cleaning and painting (para 4-7).

4-2. Preventive Maintenance

Operator's preventive maintenance is the systematic care, servicing. and inspection of the equipment to prevent the occurrence of trouble, to reduce downtime, and to assure that the equipment is serviceable.

a. Systematic Ca-re. The procedures given in paragraphs 4-4, 4-5, and 4-6 cover routine systematic care and cleaning essential to proper upkeep and operation of the equipment.

b. Preventive Maintenance Checks and Services. The preventive maintenance checks and services charts (para 4-4 and 4-5) out: line functions to be performed at specific intervals. These checks and services are designed to maintain Army equipment in a combat-serviceable condition; that is, in good general (physical) condition and in good operating condition. To assist operators in maintaining combat serviceability, the charts indicate what the normal conditions are; the References column lists the paragraphs that contain detailed repair or replacement procedures. If the defect cannot be remedied by the operator, higher category of maintenance or repair is required. Records and reports of these checks and services must be made in accordance with TM 38-750.

4-3. Preventive Maintenance Checks and Services Periods

Preventive maintenance checks and services of the multimeter are required daily, weekly, and monthly.

a. Paragraph 4-4 specifies the checks and services that must be accomplished daily, and under the special conditions listed below:

(1) Before the multimeter is taken on a mission.

(2) When the multimeter is initially installed.

(3) When the test set is reinstalled after removal for any reason.

(4) At least once a week if the equipment is maintained in a standby condition.

b. Paragraphs 4-5 and 4-7 specify additional checks and services that must be performed on a weekly and monthly basis, respectively. Perform the maintenance functions indicated in the monthly preventive maintenance checks and services chart (para 4-6)

once each month. A month is defined as approximately 30 calendar days of 8hour-perday operation. If the equipment is operated 16 hours a day, the monthly preventive maintenance checks and services should be performed at 15-day intervals. Adjustment of the maintenance interval must be made to compensate for any unusual operating conditions. Equipment maintained in a standby (ready for immediate operation) condition must have monthly preventive maintenance checks and services. Equipment in limited storage (requires service before operation) does not re quire monthly preventive maintenance.

4-4. Operator's Daily Preventive Maintenance Checks and Services Chart

Sequence No.	*Item to be inspected*	*Procedure*	*References*
1	Multimeter----------	Check equipment for completeness and general condition.	App B.
2	Exterior surfaces----	Clean exterior surfaces of the equipment ----------	Para 4-7.
3	Meter glass----------	Inspect front panel glass window for damaged housing, broken glass, physical damage, dust, or moisture.	
4	Knobs, controls, and switches.	During operation (item 5), check knobs, controls, and switches for proper mechanical action. Action must be positive, without backlash, binding, or scraping.	
5	Operation----------	During operation, be alert for any abnormal indications.	

4-5. Operator's Weekly Preventive Maintenance Checks and Services Chart

Sequence No.	*Item to be inspected*	*Procedure*	*References*
1	Cables	Inspect external cables for cuts, cracked or gouged jackets, fraying, or kinks.	
2	Hardware	Inspect all exterior hardware for looseness and damage. All screws must be tight and not damaged.	
3	Preservation	Inspect the equipment to determine that it is free of bare spots, rust, and corrosion. If these conditions exist, refer to a higher maintenance category for repair.	Para 4-7.

4-6. Organizational Monthly Preventive Maintenance Checks and Services Chart

Sequence No.	*Item to be inspected*	*Procedure*	*References*
1	Publications----------	Inspect the manual for completeness, and to see if it is in usable condition. Be sure that all changes are on hand.	DA Pam 310-4.
2	Modification work orders.	Check to see that all URGENT MWO's have been applied and that all NORMAL MWO's have been scheduled.	DA Pam 310-7.
3	Completeness	Check the equipment for completeness and general condition.	App B.
4	Cleanliness	Clean the exterior surfaces of the equipment.	
5	Preservation--------	Inspect the equipment to determine if it is free of bare spots, rust, and corrosion.	Para 4-7.
6	Meter glass--------	Inspect the front panel glass window for damaged housing, broken glass, physical damage, dust, or moisture.	
7	Cables----------	Inspect the external cables for cuts, cracked or gouged jackets, fraying, or kinks.	
8	Hardware----------	Inspect all exterior hardware for looseness and damage. All exterior screws must be tight and not damaged.	
9	Operation----------	During operation, be alert for any abnormal indications.	

4.7. Cleaning and Touchup Painting

WARNING

The fumes of TRICHLOROETHANE are toxic. Provide thorough ventilation whenever it is used; avoid prolonged or repeated breathing of vapor. Do not use near an open flame or hot surface; trichloroethane is non flammable but heat converts the fumes to a highly toxic phosgene gas. The inhalation of this gas could result in serious injury or death. Prolonged or repeated skin contact with trichloroethane can cause skin inflammation. When necessary, use gloves, sleeves, and aprons which the solvent cannot penetrate.

a. Use a clean cloth to remove dust, dirt, moisture, and grease from the front panel and the case. If necessary, dampen (not wet) the cloth with trichloroethane; wipe parts with a clean, dry cloth.

b. Clean rust and corrosion from the metal surfaces by lightly sanding them with fine sandpaper. Brush two thin coats of paint on the bare metal to protect it from further corrosion. Refer to the applicable clean and refinishing practices specified in TB 43-0118.

4-8. Replacement of Pilot Lamp (fig. 3-3 and 3-4)

When the multimeter operates normally but the pilot lamp does not illuminate, the pilot lamp is probably defective. Replace the pilot lamp with one known to be good. If the pilot lamp still does not illuminate, higher maintenance category repair is required. Replace the pilot lamp as follows:

a Unscrew (counterclockwise) the glass indicator jewel and remove it to expose the pilot lamp.

b. Press in on the pilot lamp and turn it counterclockwise to unlock.

c. Remove the defective pilot lamp and replace it with a new one. Push the pilot lamp in and twist it clockwise to lock. Replace the glass indicator jewel.

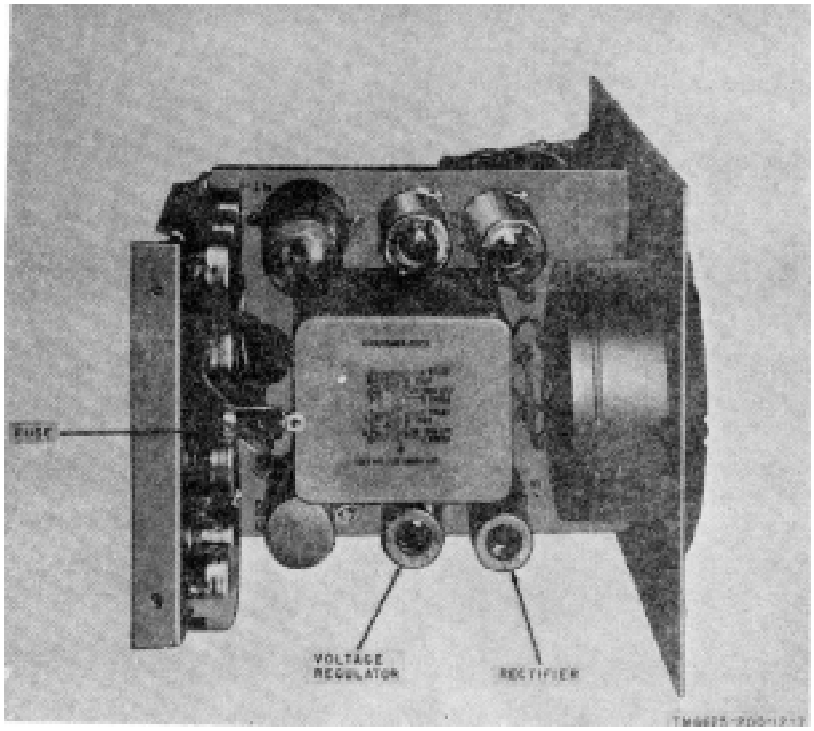

Figure 4-1. Multimeters ME-26B/U, ME-26C/U chassis, top view, showing location of rectifier tube, voltage regular tube, and fuse.

4-9. Replacement of Fuse (fig. 4-1 and 4-2)

If the multimeter is completely inoperative (pilot lamp does not illuminate and meter pointer does not deflect), the fuse is probably defective. Replace the defective fuse with a new one. If the new fuse blows when the power is applied, check the rectifier and voltage regulator tubes (para 4-10 and 4-11) If the fuse still

blows, higher maintenance category repair is required. Replace the fuse as follows:

a. Remove the rear cover by giving each of the fasteners a one-quarter turn on the ME-26B/U, the ME-26C/U and the ME-26D/U. On the ME-26A/U, push the spring release button.

b. Turn the fuseholder cap counterclockwise to unlock.

c Pull out the fuseholder cap with the defective fuse. Remove the defective fuse and replace it with a new one.

d. Insert the fuseholder cap, with the new fuse into the fuseholder. Press in on the fuseholder cap and turn it clockwise to lock.

e. Replace the rear cover.

4-10. Replacement of Rectifier Tube or Voltage Regulator Tube, Multimeters ME-26B/U, ME-26C/U and ME-26D/U (fig. 4-1)

If the pilot lamp illuminates but here is no meter pointer! deflection or if the meter indications are consistently low, the trouble may be a defective rectifier tube or a voltage regulator tube. Replace the rectifier tube and the voltage regulator tube, one at a time, with tubes known to be good. If the new tube does not correct the

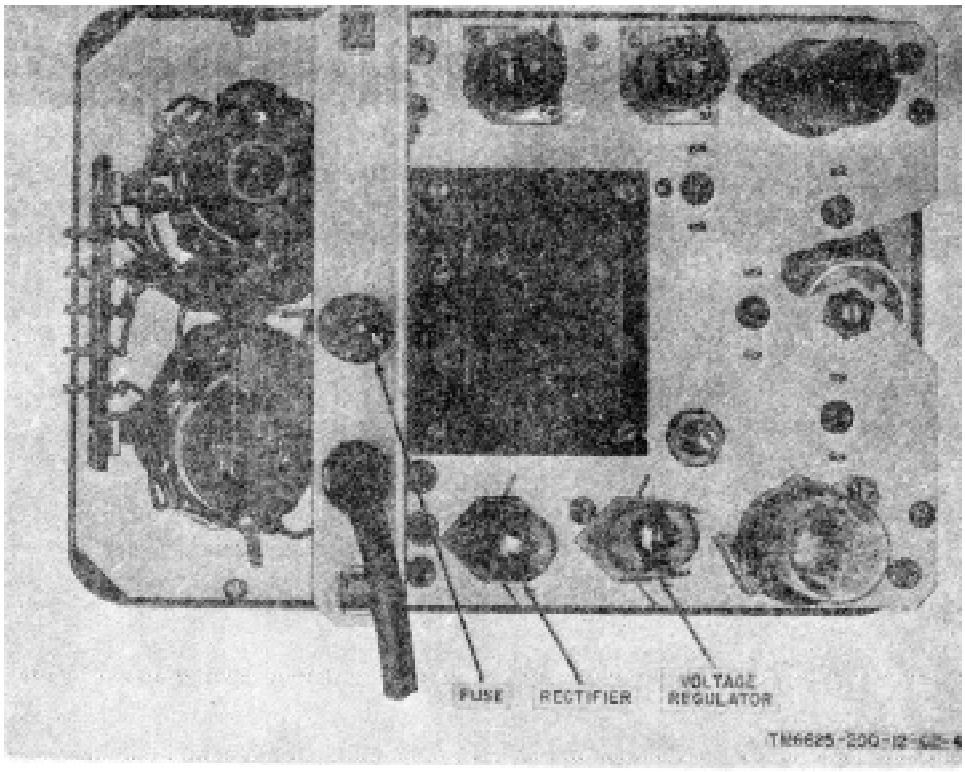

Figure 4-2. Multimeter ME-26A/U chassis, rear view, showing location of recifier tube, voltage regulator tube, and fuse.

trouble, replace the original tube and turn the multimeter in for higher maintenance category repair. Replace the tubes as follows:

a. Remove the rear cover.

b. Remove the retaining screws (fig. 1-1) from the front panel, the top of the case, and the rear crosspiece.

c. Remove the chassis by gently sliding it forward while lifting the power cable from the groove in the rear crosspiece.

d. Press down on the tube shield and turn it counterclockwise to unlock; remove the tube shield.

***Caution*: Do not rock or rotate a tube when removing it from the tube socket; pull it straight out.**

e. Pull out and replace a suspected rectifier tube or voltage regulator tube with a new one. Replace the original tube if the multimeter remains inoperative.

f. Place the tube shield over the tube; press down and turn the tube shield clockwise to lock.

g. Slide the chassis back into the case and replace the retaining screws.

h. Replace the rear cover.

4-11. Replacement of Redifier Tube or Voltage Regulator Tube, Multimter ME-26A/U

(fig. 4-2)

Replace the Multimeter ME-26A/U tubes as follows:

a. Remove the rear cover by pressing the spring release button on the top rear of the case (fig. 1-2).

b. Remove the retaining screws that hold the main chassis to the case.

c. Remove the chassis by gently sliding it forward out of the case.

d. Push the spring wire tube retainer away from the tube.

***Caution:* Do not rock or rotate a tube when removing it from the tube socket; pull it straight out.**

c. Pull out the suspected rectifier tube or voltage regulator tube and replace it with a new. one. Replace the original tube if the multimeter remains inoperative.

f. Push the spring wire retainer back on the tube.

g. Slide the chassis back into the case and replace the retaining screws.

h. Replace the rear cover.

CHAPTER 5

FUNCTIONING

Section I. BLOCK DIAGRAM ANALYSIS

5-1. Block Diagram Functioning

Multimeter ME-26(*)/U is an electron tube multimeter (voltmeter-ohmmeter) used to measure direct current voltage, alternating current voltage, and resistance. A block diagram analysis is given in paragraphs 5-2, 5-3, and 5-4. For complete circuit details, refer to the schematic diagrams (fig. 9-3 and 9-4).

5-2. DC Voltage Measurements

(fig. 5-1)

a. The dc voltage to be measured is applied between the DC probe and the COMMON clip. In Multimeters ME-26B/U, ME-26C/U, and ME-26D/U which have been changed in accordance with paragraph 7-, the COMMON clip is isolated from the chassis ground. In Multimeter ME-26A/U, and Multimeters ME-26B/U and ME-26C/U which have not been changed, the COMMON lead goes directly to the chassis ground. In zither case, the voltage is fed through the FUNCTION switch (SELECTOR switch on' Multimeter ME-26A/ U) to the multiplier resistors, selected by RANGE switch S2, then applied to amplifier V2A.

b. With no voltage applied to amplifier V2A, amplifiers V2A and V2B function as a balanced amplifier stage. The balancing resistors provide identical dc bias to amplifiers V2A and V2B so that, with no input, their outputs are identical. Amplifiers V2A and V2B control cathode followers V3A and V3B, respectively. When the amplifiers are balanced, the inputs to the cathode followers are identical. Current flow through cathode followers V3A and V3B is equal, and' the meter-balancing circuit is balanced. Under this condition, there is no output from the meter-balancing circuit to the meter.

c. With a voltage applied to amplifier V2A (a above) amplifiers V2A and V2B become unbalanced. The resultant change in the inputs to cathode followers V3A and V3B causes unequal currents to flow in the cathode followers, and the meter-balancing circuit becomes unbalanced. Under this condition, the output of the meter-balancing circuit is applied to meter M1 through the dc calibration control.

d. The power supply, which consists of transformer T1, full-wave rectifier V5, and voltage regulator V4, provides the required operating and bias voltages.

5-3. AC Voltage Measurements

(fig. 5-2)

a. The ac voltage to be measured is applied to the AC probe where it is rectified and filtered. The output of the AC probe is then applied to the multiplier resistors through FUNCTION switch S1 (SELECTOR switch on Multimeter ME-26A/U). A portion of the voltage across the multiplier resistors, selected by RANGE switch S2, is applied to amplifier V2A.

b. With no voltage applied to the AC probe, the ac signal rectifier within the AC probe produces an emission current that develops a voltage across the multiplier resistors. A portion of this voltage is applied to amplifier V2A through RANGE switch S2. To compensate for the voltage produced by the emission

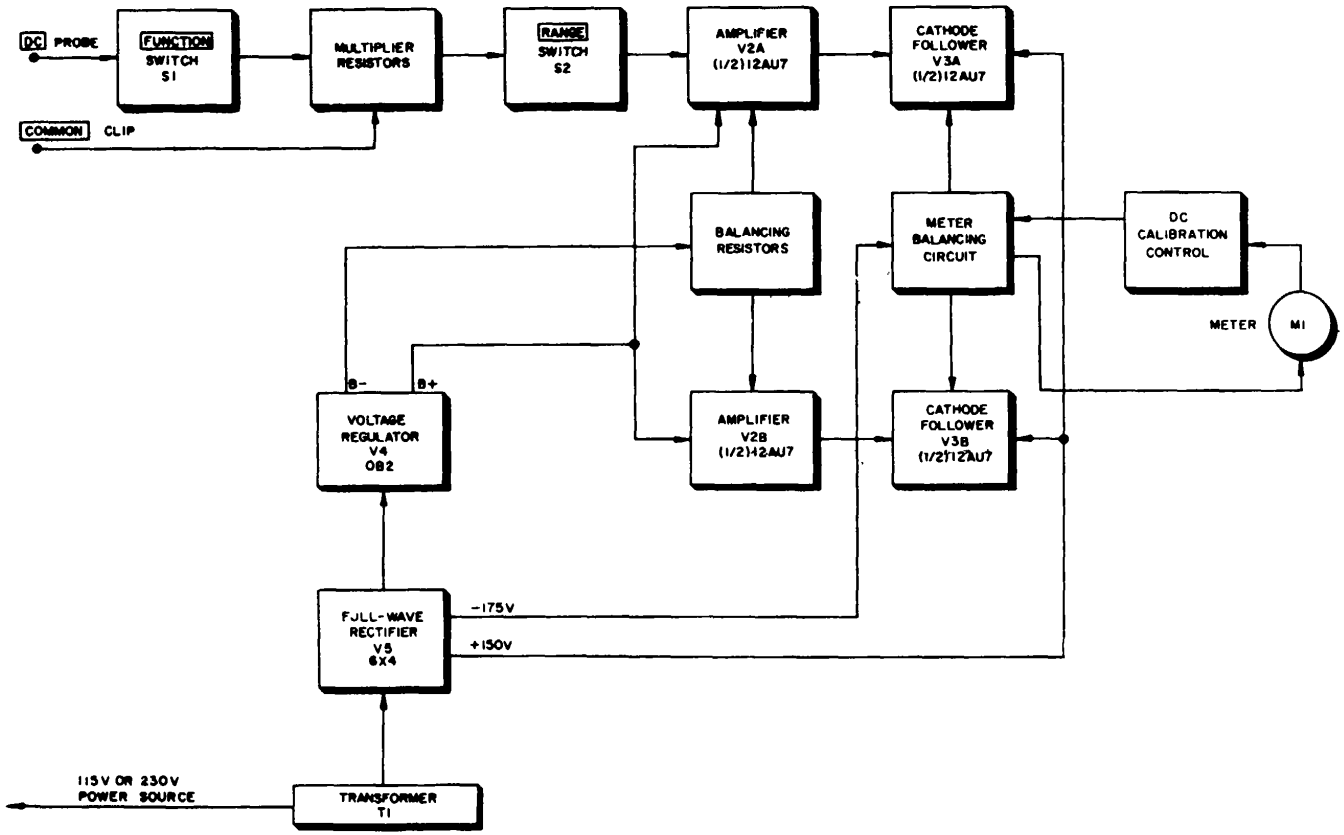

Figure 5-1. Dc voltage measurement circuit, block diagram.

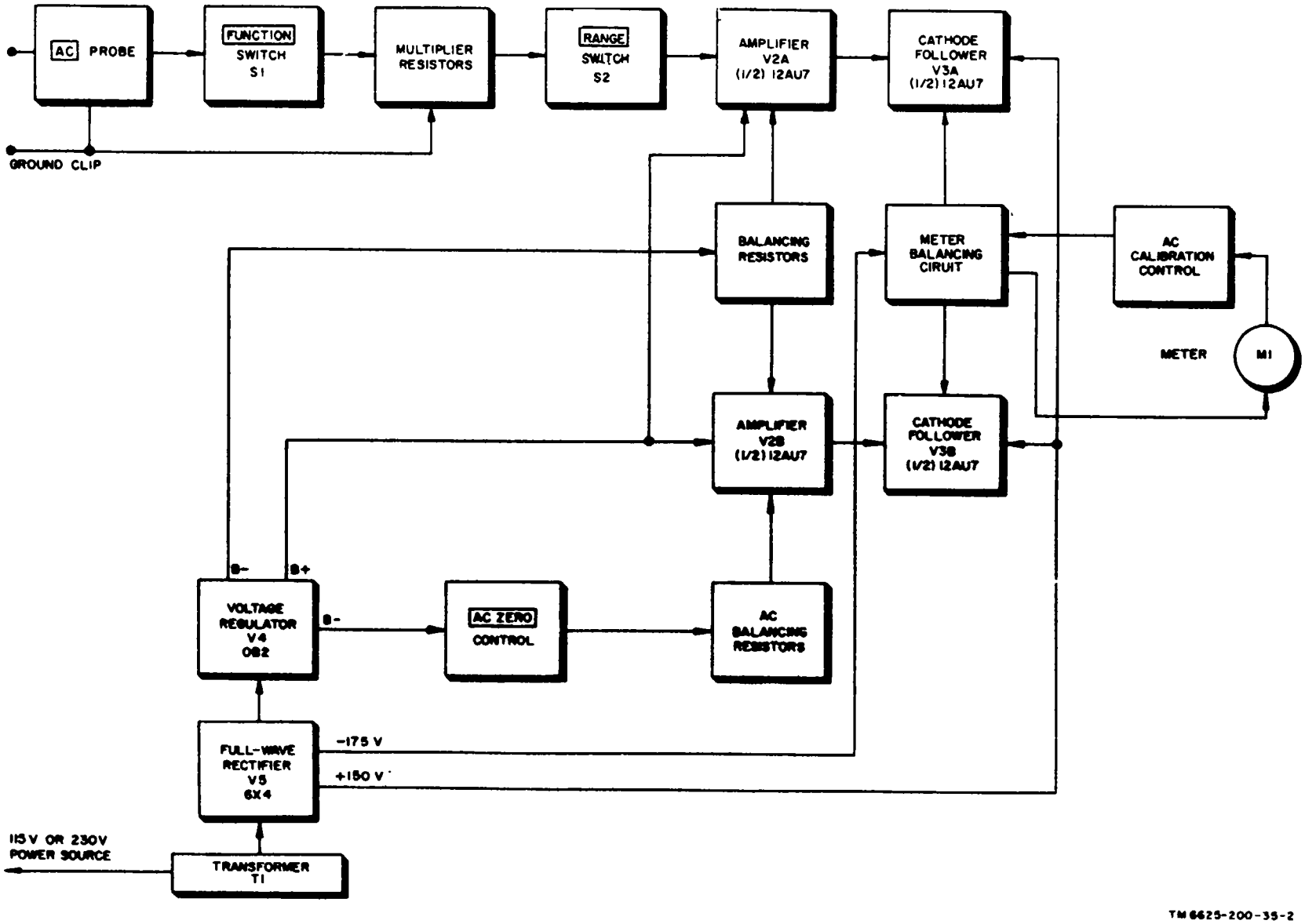

Figure 5-2. Ac voltage measurement circuit, block diagram

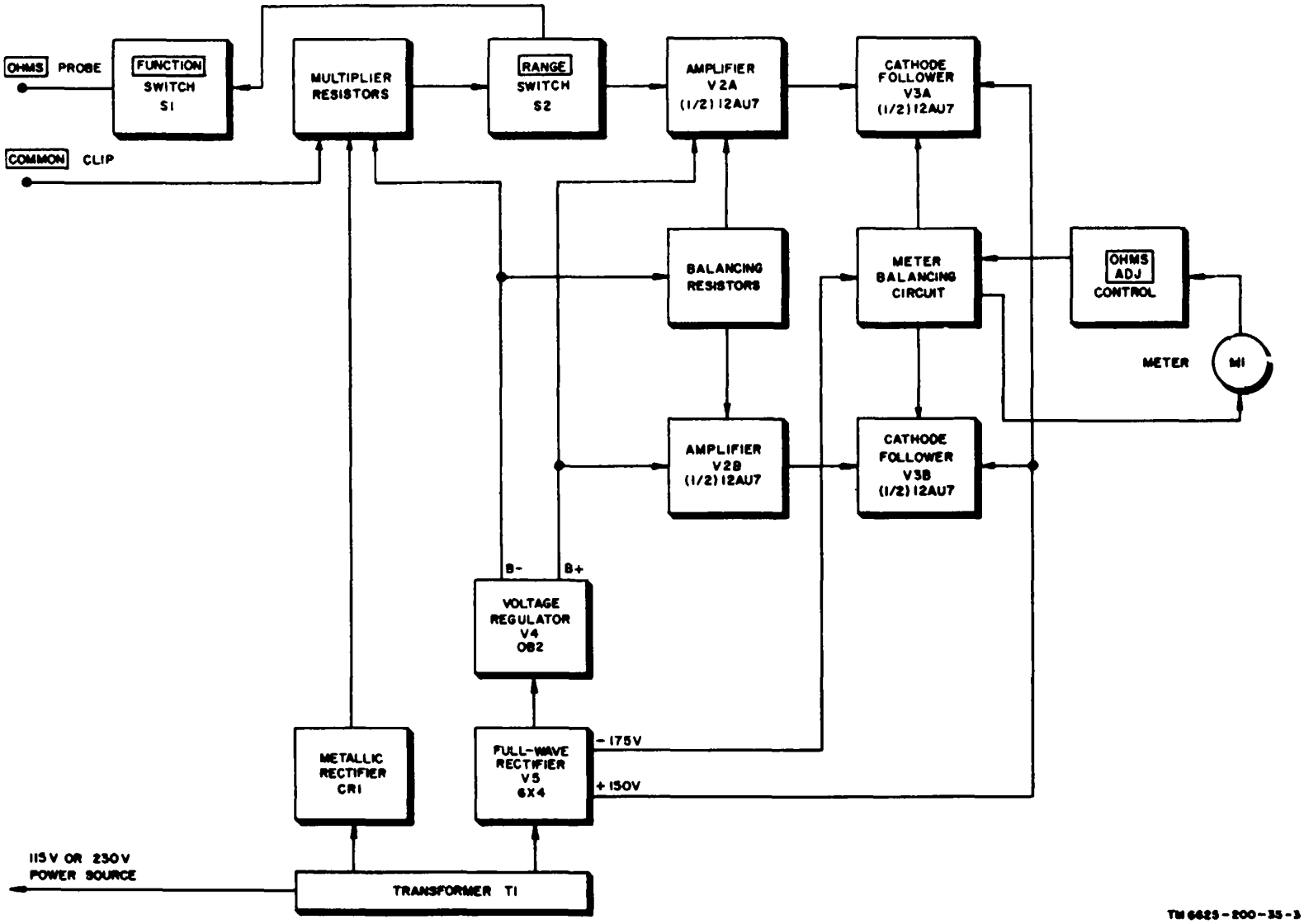

Figure 5-3. Resistance measurement circuit, block diagram.

current, a negative voltage is applied from the ac balancing resistors to amplifier V2B. The AC ZERO control is used to adjust the voltage applied to amplifier V2B until it is equal to the emission voltage. Amplifiers V2A and V2B are now balanced, and the inputs to cathode followers V3A and V3B are identical. Current flow through cathode followers V3A and V3B is equal and the meter-balancing circuit is balanced. Under this condition, there is no output from the meter-balancing circuit to meter M1.

c. After the AC ZERO control has been adjusted, and with a voltage applied to the AC probe (a above), the function of amplifiers V2A and V2B and cathode follower V3A and V3B is identical with that described In paragraph 5-2c, except that the output to meter M1 is through the ac calibration control. The function of the power supply is described in paragraph 5-2d.

5-4. Resistance Measurements (fig. .5-3)

a. The resistance measurement circuit differs from the voltage measurements circuits (para .5-2 and 5-3 above) in that amplifiers V2A and V2B and cathode followers V3A and V3B are normally at maximum unbalance When the OHMS probe and the COMMO N clip are separated, a negative voltage is applied to amplifier V2A. On the RX1 range, the output of metallic rectifier CR1 is applied through FUNCTION switch S to the OHMS probe, and through RANGE switch S2 to amplifier V2A. On all other resistance ranges (RX10-RPX1M), the B-output of voltage regulator V4 is applied to the multiplier resistors. A portion of the voltage across the multiplier resistors, selected by RANGE switch S2, Is applied directly to amplifier V2A and, through FUNCTION switch S1, to the OHMS probe With a voltage applied to amplifier V2A, the function of amplifiers V2A and V2B is identical with that described in paragraph 5-2c, except that the output to meter M1 is through the OHMS ADJ control, the OHMS ADJ control is adjusted so that meter Ml indicates infinity (maximum right-hand deflection of the meter needle).

b. When the OHMS probe and the COMMON clip are touched together (shorted), no voltage is applied to amplifier V2A. Under this condition, the function of amplifiers V2A and V2B and cathode followers V3A and V3B is identical with that described in paragraph 5-2b.

c. When an unknown resistance is connected between the OHMS probe and the COMMON clip, current flows through the resistance and causes the voltage applied to amplifier V2A to decrease. The resultant change in the outputs of amplifiers V2A and V2B also causes cathode followers VSA and V3B to approach a balanced condition, and the output from the meter-balancing circuit decreases; current flowing through meter M1 decreases, and the meter needle moves to the left (toward zero) to indicate the resistance value connected between the OHMS probe and the COMMON clip

d. The power supply, which consists of transformer T1, full-wave rectifier Vt5, and voltage regulator V4, supplies the required operating and bias voltages

Section II. CIRCUIT ANALYSIS

5-5. Amplifier and Cathode Follower Circuit (fig. 5-4)

When the outputs of the cathode follower stages are balanced, no current flows in the meter circuit and the meter needle does not deflect (a below); however, when the outputs of the cathode follower stages are unbalanced, current flows through the meter circuit and the meter needle does deflect (b below). The amount of deflection is proportional to the unbalance

a. Balanced

(1) Identical positive dc voltages are fed to the plates of amplifiers V2A and V2B through plate load resistors R2O and R25 Also, the cathodes are connected through balancing resistors R21, R22, and PR23 to a common negative dc potential. Because the potentials

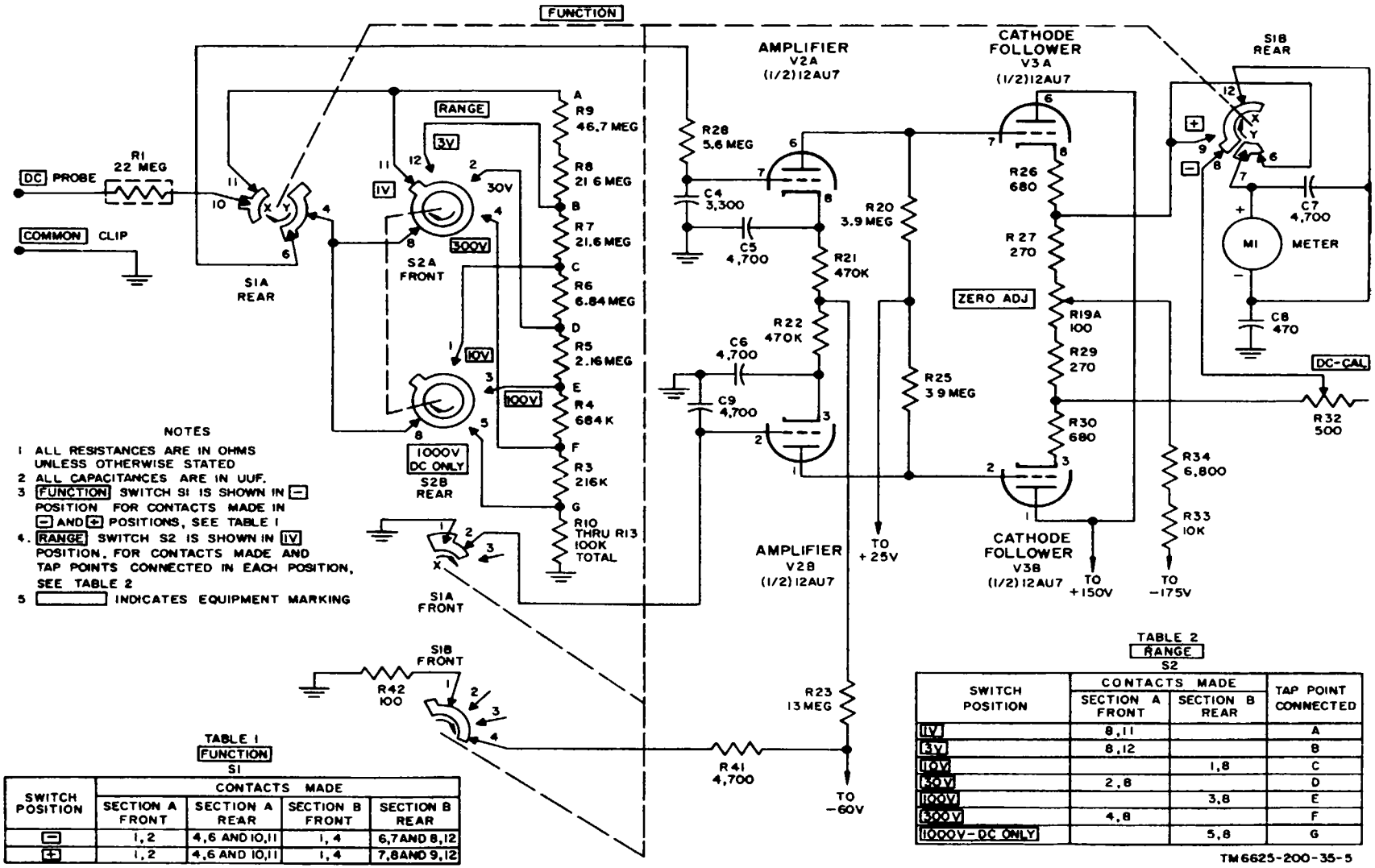

Figure 5-4. Dc voltage measurement circuit, partial schematic diagram.

applied to the grids of tube V2 are also identical, the outputs of amplifiers V2A and V2B remain constant, and the circuit functions as a balanced amplifier.

(2) The plates of amplifiers V2A and V2B are directly coupled to the grids of cathode followers V3A and V3B. respectively. The plates of tube V3 are both at the same positive (B +) potential and the cathodes are connected to the same negative (B-) potential. As a result of the identical potentials at the grids, the cathodes, and the plates of tube V3, the current flow in section V3A is equal and opposite to that in section V3B. These equal but opposite currents flow through the meter-balancing circuit (resistors R19A, R27, and R29) and produce identical voltages at the junction of resistors R26 and R27, and resistors R29 and R30. Because these identical voltages of the same polarity are applied to the meter terminals, no current flows through the meter' circuit and the meter needle does not deflect.

(3) ZERO ADJ control R19A compensates for any unbalance that may exist in the circuit because of different tolerances of the components. Also, the very low voltages of tube V2 (+ 15 volts on the plates and +0.75 volt on the cathode) together with the negative feedback developed across common cathode resistors R23, R33, and R34 produce stable circuit operation. Resistors R26 and R30 are cathode-dropping ;resistors. Resistors R41, together with resistors R42 and R4i, form a voltage-divider network from the -175 volts to ground. Resistor R28 is a parasitic suppressor for amplifier V2A and, in conjunction with capacitor C4, provides a dampening effect to prevent surges from being introduced in meter M1 at the moment the probe is touched to a voltage source. Capacitors C5 and C6 are cathode bypass capacitors. Capacitor C7 bypasses radiofrequencies around meter M1, capacitor C8 shunts radiofrequencies to ground, and capacitor C4 is an RF bypass capacitor in the grid circuit of amplifier V2B. (Capacitor C9 is in the circuit only during the ac voltage function.)

b. Unbalanced. When an input signal is applied, amplifier stage V2 becomes unbalanced and functions in push-pull, and also causes cathode follower stage V3 to become unbalanced and function in push-pull.

(1) *Negative input voltage*. A negative voltage (never more than -0.9 volt) applied to the grid of amplifier V2A decreases the platecathode current and causes an increase in plate voltage. Because amplifiers V2A and V2B are cathode coupled (through resistor R23), the decrease in current through resistor R23 places the cathode of amplifier V2B at a less positive potential (effectively making the grid more positive), resulting in a decrease in plate voltage. The increased plate voltage (more positive) of amplifier V2A is directly coupled to the grid of cathode followed V3A, causing an increase in plate-cathode current. The decreased plate voltage (less positive) of amplifier V2B is directly coupled to the grid of cathode followed V3B, causing a decrease in plate-cathode current. As a result of the increased current flow in tube V3A and the decreased current flow in tube .V3B. the voltage at the junction of resistors R26 and R27 becomes more)positive while the voltage at the junction of resistors R29 and R30 becomes less positive. This unbalanced voltage condition (proportional to the voltage al)l)lied to the grid of amplifier V2A) causes current to flow- in the meter circuit, and meter M1 deflects.

(2) *Positive input voltage* . A positive voltage (never more than t-0.9 volt) applied to the grid of amplifierV2A, increases the platecathode current and causes a decrease in plate voltage. Because amplifiers V2A and V2P, are cathode of amplifiers V2B at a more positive potential (effectively making the grid more negative), resulting in an increase in plate voltage. The decreased plate voltage (less positive) of amplifier V2A is directly coupled to the grid of cathode follower V3A, causing a decrease in plate-cathode current. The increased plate voltage (more positive) of amplifier V2B is directly coupled to the grid of cathode follower V3P,, causing an increase in plate-cathode current. As a result of the decreased current flow in tube V3A and the increased current flow in tube V3B, the voltage at the junction of resistors R26 and R27 becomes less positive, while the voltage at the

junction of resistors R29 and R30 becomes more positive. This unbalanced voltage condition (proportional to the voltage applied to the grid of amplifier V2A) causes current to flow in the meter circuit, and meter M1 deflects.

5-6. DC Voltage Measurements Analysis (fig. 5-4)

When the multimeter is set up for dc voltage measurements, FUNCTION switch S1 (SELECTOR switch on Multimeter ME-26A/ U) may be in either the - or + position (table 1, fig. 5-4); either position places the DC probe and the COMMON clip across the multiplier resistors (voltage-divider network) which consists of resistors R1 and 1\fs20 3 through R13. To obtain the required range of operation, an appropriate portion of the voltage-divider network is selected by the setting of RANGE switch S2 (table 2, fig. 5-4)

a. No Input Voltage. Under no input conditions, the grids of amplifiers V2A and V'2B are at ground potential, the amplifier and cathode follower circuit is balanced, and the meter indication is zero.

b. Input Voltage Applied. With an input voltage applied between the DC probe and the COMMON clip, the amplifier and cathode follower circuit becomes unbalanced.

(1) Negative input voltage. When a negative input voltage is applied to the input (DC probe negative, and COMMON clip positive), current flows into the top side of resistor R9 and through the voltage-divider network to chassis ground The negative voltage selected by RANGE switch S2 is applied to the grid of amplifier V2A; the amplifier and cathode follower circuit becomes unbalanced, and meters M1 indicates the value of the voltage being measured.

(2) Positive input voltage. Placing FUNCTION switch S1 in the i position reverses the connections at meter M1 to enable meter M1 to indicate properly. When a positive input voltage is al)l)lied to the input (DC probe positive and COMMON clip negative), current flows into the voltage-divider network from the chassis ground and out of the top side of resistor R9. The positive voltage selected by RANGE switch S2 is applied to the control gild of amplifier V2A; the amplifier and cathode follower circuit becomes unbalanced and meter M1 indicates the value of the voltage being measured. With either type of input (-or +), resistor R1 prevents capacitive loading of the circuit under test by the multimeter. DC-CAL control R32 is used to calibrate meter M1 for dc voltage measurements (para 7-5).

5-7. AC Voltage Measurements, Analysis (fig. 5-5)

When the multimeter is set up for ac voltage measurements. FUNCTION switch S1 is set to AC. placing the AC probe across the voltage-divider network which consists of resistors R2 through R13 To obtain the required range of operation, an appropriate portion of the voltage-divider network is selected by the setting of RANGE switch S2. (Refer to table on fig 5-5.)

a. No input Voltage. Under no input voltage conditions, the amplifier and cathode follower circuit is balanced and the meter indication is zero.

(1) During the ac function, ac signal rectifier V1 produces an emission current that flows into the voltage-divider network The emission current flows into the top side of resistor R9 and though the voltage divider to ground. The negative voltage developed is fed to the grid of amplifier V2A. This negative voltage tends to unbalance the two sections of the amplifier stage.

(2) To compensate for the negative voltage applied to amplifier V2A, the grid of amplifier V2B is tied to an ac-balancing network which consists of AC ZERO control R53 and resistors R14 through R18. The ac-balancing network feeds a negative voltage to the grid of amplifier V2T1 The negative voltage, selected by section S2D real of RANGE switch S2, is made identical with that applied to amplifier V2A by adjusting AC ZERO control R53. This condition keeps the grids of amplifiers V2A and V2r, at the same potential, and the ampli-

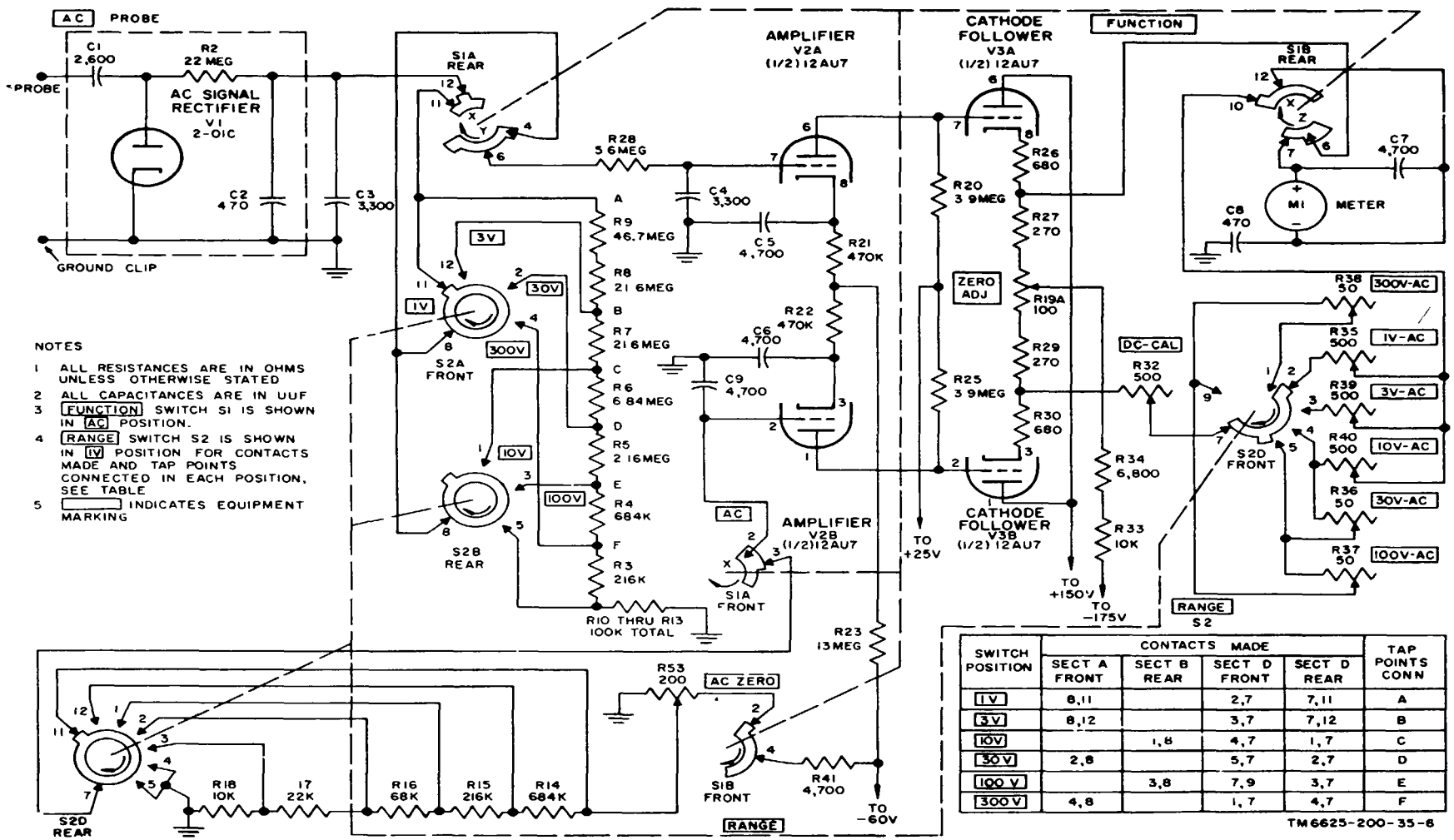

SWITCH POSITION	CONTACTS MADE				TAP POINTS CONN
	SECT A FRONT	SECT B REAR	SECT D FRONT	SECT D REAR	
1V	8,11		2,7	7,11	A
3V	8,12		3,7	7,12	B
10V		1,8	4,7	1,7	C
30V	2,8		5,7	2,7	D
100V		3,8	7,9	3,7	E
300V	4,8		1,7	4,7	F

Figure 5-5. Ac voltage measurement circuit, partial schematic diagram.

fier and cathode follower circuit remains balanced.

b. Input Voltage Applied. With an ac voltage applied between the tip and the ground clip of the AC probe, the amplifier and cathode follower circuit becomes unbalanced. (1) The ac input voltage applied to the AC probe is rectified by ac signal rectifier V1. The dc current output of the rectifier circuit flows into the top side of resistor R9 and through the voltage-divider network to the chassis ground. Because an additional negative voltage (over and above that discussed in a above) is applied to the grid of amplifier V2A, the amplifier and cathode follower circuit becomes unbalanced and meter M1 indicates the value of the ac voltage under measurement.

(2) Capacitor C1, together with resistor R2, prevents capacitive loading of the circuit under test by the multimeter. Also, capacitor C1 serves as a dc blocking capacitor, and resistor R2 is part of the filter circuit that includes capacitors C2 and C3. The ac alignment controls (resistors R3,5 through R40) are used to calibrate meter M1 for ac voltage measurements (para 7-6).

5-8. Resistance Measurements (fig. 5-6)

When the multimeter is set up for resistance measurements, FUNCTION switch S1 is placed at OHMS, and the OHMS probe and COMMON clip are placed across the internal resistance measurement circuit. To obtain the required range of operation, select an appropriate series-parallel or parallel resistance value by the setting of RANGE switch S2. (Refer to the table on fig. 5-6.)

a. Infinity Indication. When no external resistance is connected between the OHMS 1probe and the COMMON clip (probe and clip separated), the grid of amplifier V2A is connected to a -0.9-volt dc potential, and the grid of the amplifier is connected to the chassis ground.

(1) When RANGE switch S2 is set to RX1, -0.9 volt dc is applied from the low-voltage supply (para 5-9) to the input probes, resistor R47, and the grid of amplifier V2A.. When RANGE switch S2 is set to any other position (RX10-RX1M),- 0.9 volt dc is applied from the negative output (-60 volts) of the high-voltage supply (para 5-9c) to the input probes, the voltage-divider network (resistors R3 through R6 and R10 through R13), and the grid of amplifier V2A.

(2) Because of the negative voltage applied to the grid of amplifier V2A, the amplifier and cathode follower circuit becomes unbalanced, and meter M1 indicates infinity (needle at extreme right).

b. Zero Indication. When no external resistance is connected between the OHMS probe and the COMMON clip, but with the probe and clip connected (shorted), both grids of amplifier V2 are connected to the chassis ground, the amplifier and cathode follower circuit is balanced, and the meter indicates zero (needle at extreme left). OHMS ADJ control R31 is used to adjust the meter M1 needle exactly to infinity with the input open, and ZERO ADJ control R19A is used to adjust the meter M1 needle exactly to zero with the input shorted.

c. Resistance Indication. When an external resistor is connected between the OHMS probe and the COMMON clip, the meter indicates the value of the resistor under measurement.

(1) When RANGE switch S2 is set to RX1, the unknown resistor is placed in parallel with resistor R47. The parallel circuit thus created draws additional current from the low-voltage supply and the voltage drop across resistors R48 and R49 (fig. 57) increases. The increased voltage drop reduces the voltage (to less than -0.9 volt) that was originally impressed on the grid of amplifier V2A (a(1) above).

(2) When RANGE switch S2 is in any other position (RX1 through RX1M), the unknown resistor is placed in series-parallel with that value of resistance selected by the position of RANGE switch S2. (Refer to table on fig. 5-6.) The total dc voltage (-0.9 volt) available from the negative output (-60 volts) of the high-voltage supply is now divided proportionately between the unknown

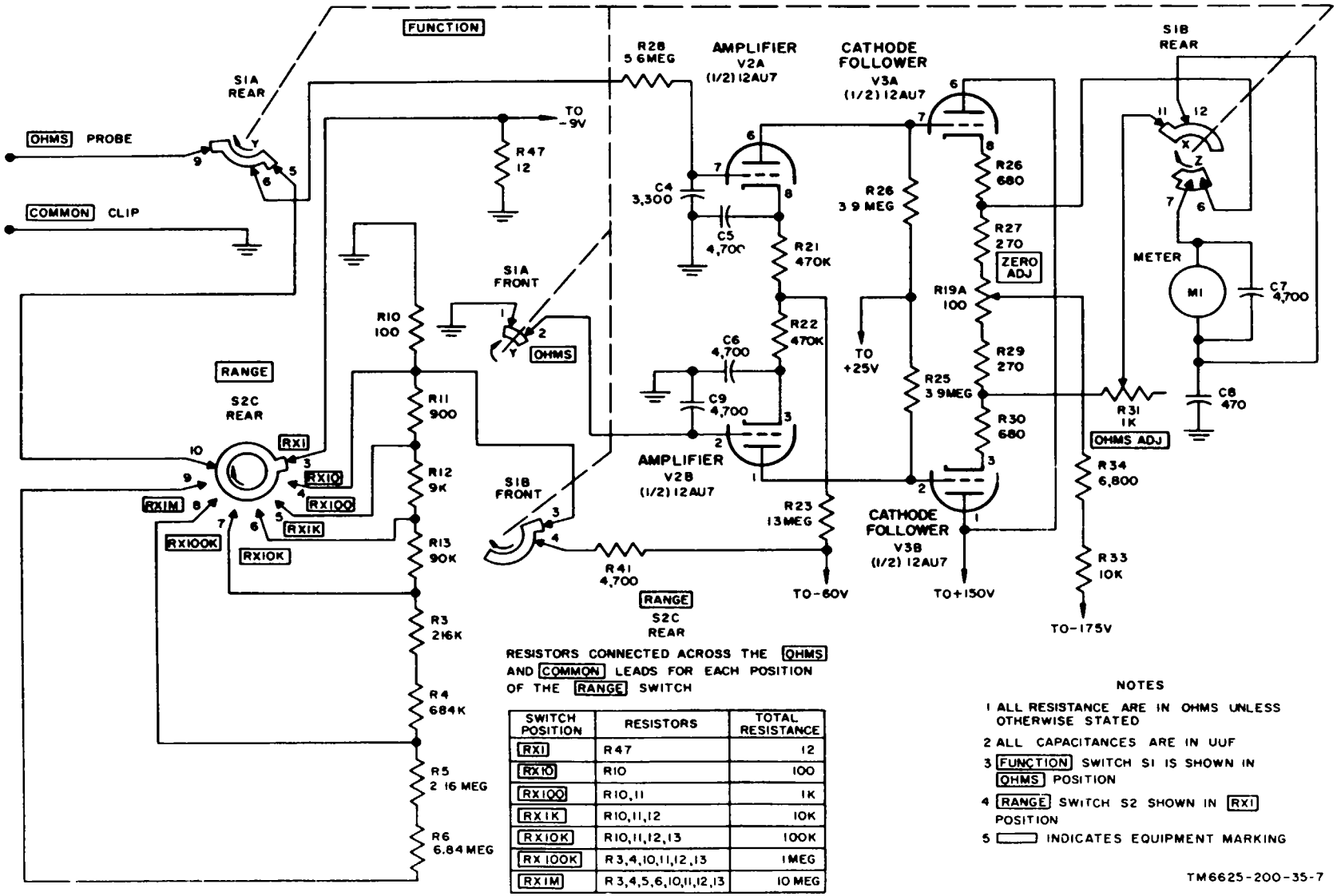

SWITCH POSITION	RESISTORS	TOTAL RESISTANCE
RX1	R47	12
RX10	R10	100
RX100	R10,11	1K
RX1K	R10,11,12	10K
RX10K	R10,11,12,13	100K
RX100K	R3,4,10,11,12,13	1MEG
RX1M	R3,4,5,6,10,11,12,13	10 MEG

Figure 5-6. Resistance measurement circuit, partial schematic diagram.

resistor and the selected resistors of the voltage-divider network. The result of this voltage division is a less negative voltage (less than - 0.9 volt) impressed on the grid of amplifier V2A.

(3) As a result of the decrease in the negative ((1) or (2) above) applied to the grid of amplifier V2A, the amplifier and cathode follower circuit is unbalanced to a lesser degree and the meter indicates the value of the unknown resistance.

5-9. Power Supply

a. Impact Power. The ac voltage (115 or 230 volts) is fed from the power source, through power connector Pl (fig. 5-7), FUSE F1, and switch SIC (part of FUNCTION switch S1 (SELECTOR switch in Multimeter ME-26A/U)) to the primary of transformer T1.

(1) Switch section SIC is closed when FUNCTION switch S1 (fig. 9-3 and 9-4) is in any position other than OFF.

(2) For a 115-volt ac voltage input (fig. 5-7), the two primary windings are connected in parallel. For a 230-volt ac voltage input, the two primary windings are connected in series.

(3) Capacitors C11 and C12 prevent spurious voltage, which may be present in the power source, from affecting the equipment. Capacitor C11 and C12 also prevent noise generated in the multimeter from entering the powerline.

b. Filament Supply.

(1) One section of the low-voltage winding of transformer T1 provides 6.25 volts for the filaments of tubes V2, V3, and V5, and pilot lamp II. Resistor R52 is a current limiting resistor in the pilot lamp II circuit. The complete low-voltage winding (8-10) provides 12.5 volts for the filament circuit of tube VI ((2 below) and for the low-voltage supply. Resistor R51 drops the voltage applied to the filament of tube V2 to insure low cathode emission.

(2) Ballast RT1 and resistors R24, R50, and R54 maintain a constant voltage on the filament of tube V1. Resistor R50 is adjusted (para 7-6) so that the filament voltage is 5 volts.

c. High-Voltage Dc Supply. The High-voltage secondary winding (1-3) of transformer T1 provides the high voltage required for full wave rectifier V5.

(1) Full-wave rectifier V5 provides unregulated B-(-175 volts dc) and the B+ (+150 volts dc) required by cathode followers V3A and V3B. The B+ voltage is also supplied to the voltage regulator circuit, consisting of voltage regulator V4 and a voltage divider network (resistors R41-R44). This circuit supplies the +44 volts dc and the -60 volts dc required by amplifiers V2A and V2B. The -60 volts is also applied to the resistance measuring circuit when the equipment is set up for resistance measurements above the RXI range (para 5 8a (1)).

(2) Capacitor C10, together with resistors R45 and R46, form a filter for the full-wave rectifier.

d. Low-Voltage Dc Supply. Rectifier CR1 provides the low dc voltage (-0.9 volt) required for making 5 8a(1)). Resistor R49 is adjusted (para 7-8) so that the voltage across resistor R47 is -0.9 volt. Resistor R48 is voltage dropping resistor.

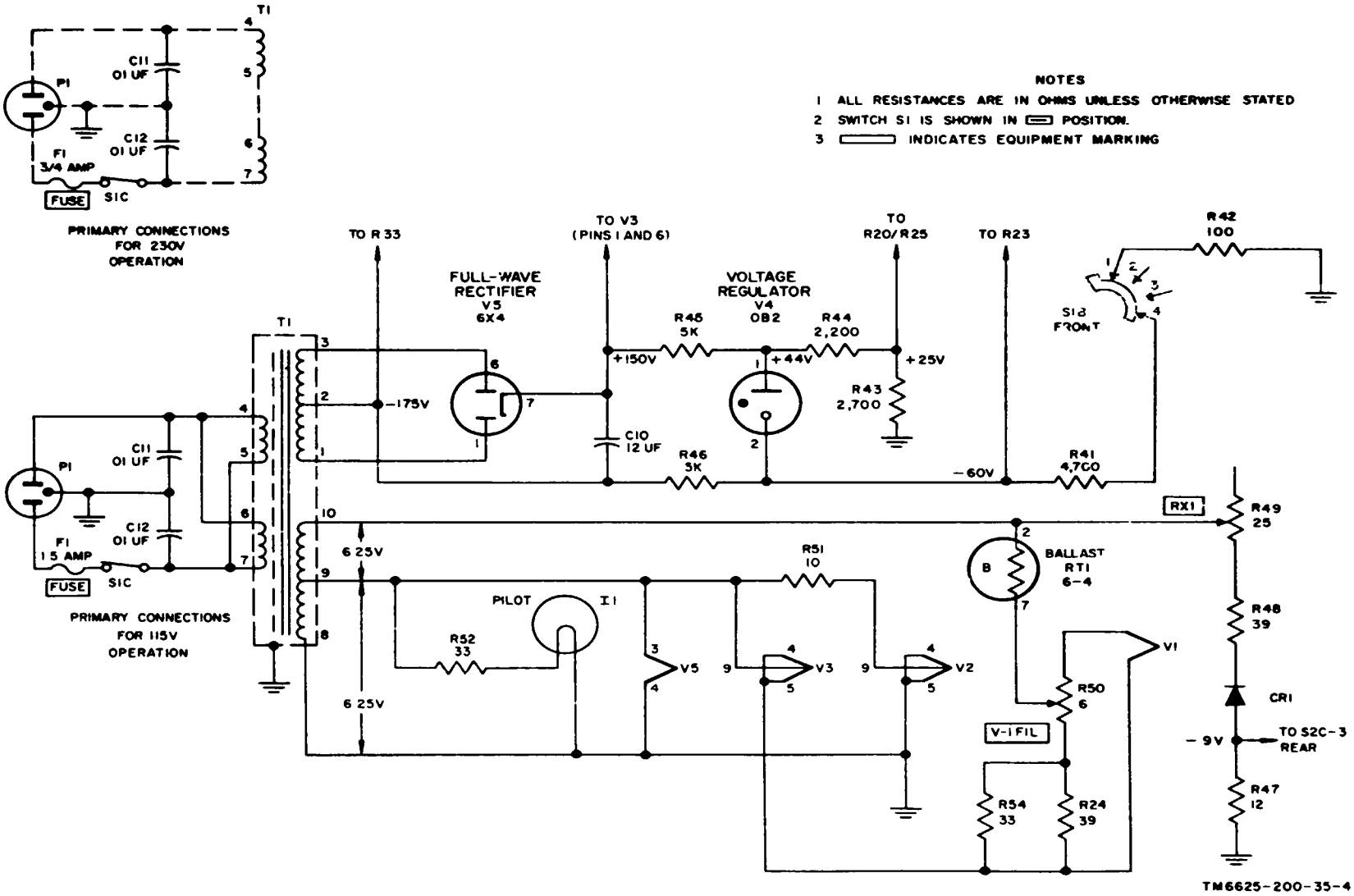

Figure 5-7. Power supply, partial schematic diagram.

5-10. Internal Difference n Models

Internal differences between models are given below.

Component	*ME-26A/U*	*ME-26B/U, ME-26C/C and ME-26D/U*
C2	500 μμf	470 μμf
C3	4,700 μμf	3,300 μμf
C4	5,000 μμf	5,000 μμf
C5	5,000 μμf	4,700 μμf
C6	5,000 μμf	4,700 μμf
C7	5,000 μμf	4,700 μμf
C8	5,000 μμf	470 μμf
C9	5,000 μμf	4,700 μμf
C10	4 μf	10 μf
C11	Not used	0.01 μf
C12	Not used	0.01 μf
C13	Not used	330 μμf
R3	216.3K	216K
R4	683.7K	684K
R5	2.163 meg	2.16 meg
R6	6.837 meg	6 84 meg
R7	21.63 meg	21.6 meg
R8	21.63 meg	21.6 meg
R9	46 74 meg	46.7 meg
R14	683.7K	684K
R15	2163K	216K
R21	500K	470K
R22	500K	470K
R54	18	33
F1 (115-volt operation)	0.4 amp	1.5 amp
F1 (230-volt operation)	0 2.5 amp)	0.75 amp

CHAPTER 6
TROUBLESHOOTING

Section I. GENERAL TROUBLESHOOTING TECHNIQUES

NOTE

All troubleshooting, repair, and calibrator procedures should be performed by general support personnel, except for rebuilding the equipment. The equipment should be rebuilt by depot personnel.

6-1. Troubleshooting Procedures

a. General. The first step in servicing a defective multimeter is to localize the fault. Localizing means tracing the fault to a stage or circuit responsible for abnormal operation. The second step is to isolate the fault. Isolation means tracing the fault to a defective part responsible for the abnormal condition. Some faults, such as burned-out resistors and arcing or shorted transformers, often can be isolated by means of sight, smell, or hearing; however, the majority of faults must be isolated by checking voltages and resistances.

b. Localization and Isolation. The tests listed below will aid in localizing and isolating the trouble. First, localize the trouble to a single stage or circuit, and then isolate the trouble within that circuit by voltage, resistance, and continuity measurements.

(1) *Visual inspection.* The purpose of visual inspection is to locate faults without testing or measuring circuits. All meter indications, or other visual signs, should be observed and an attempt made to localize or isolate the fault.

(2) *Voltage and resistance measurements.* These measurements will help locate the individual component part at fault. Use the resistor and capacitor color codes (fig. 9-1 and 9-2) to find the value of the components. Use the voltage and resistance diagrams (fig. 6-8 through 6-11) to find normal readings, and compare them with the readings taken.

(3) *Troubleshooting chart.* The trouble symptoms listed in the chart (para 6-4b) will aid in isolating the trouble to a component part. Component location is shown in figures 6-1 through 6-7.

(4) *Intermittent troubles.* In all of the tests, the possibility of intermittent troubles should not be overlooked. If present, this type of trouble often may be made to appear by tapping or jarring the equipment.

6-2. Tools and Test Equipment Required

The chart below lists the tools and test equipment required for troubleshooting the multimeter. The applicable technical manuals and the assigned common names are also listed.

Item	*Technical manual*	*Common name*
Test Set, Meter TS-682A/GSM-1	TM 11-6625-277-14	Meter tester
Multimeter ANI/USM-223	TM 11-6625-654-14	
Test Set, Electron Tube TV-2/U (depot only)	TM 11-6625-316-12	Tube tester
Test Set, Electron Tube TV-7/U (general support only)	TM 11-6625-274-12	Tube tester
Tool Equipment TK-105/G		

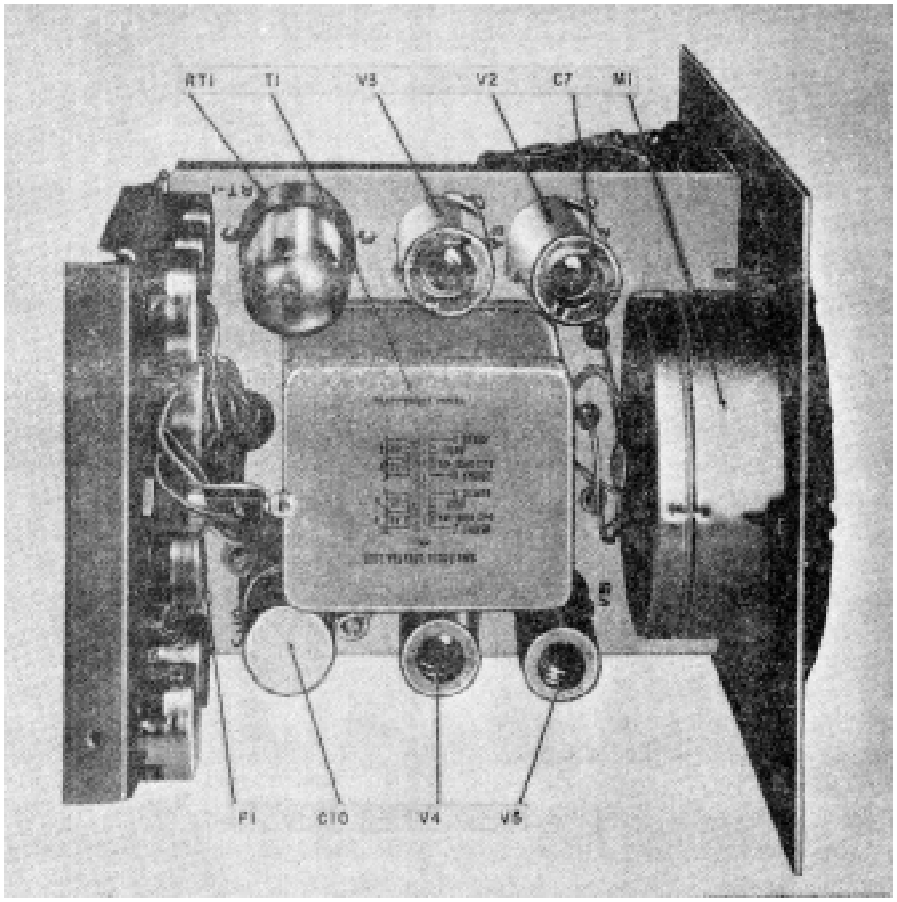

Figure 6-1. Multimeters ME-26B/U, ME-26CIU, and ME26DIU chassis, top view.

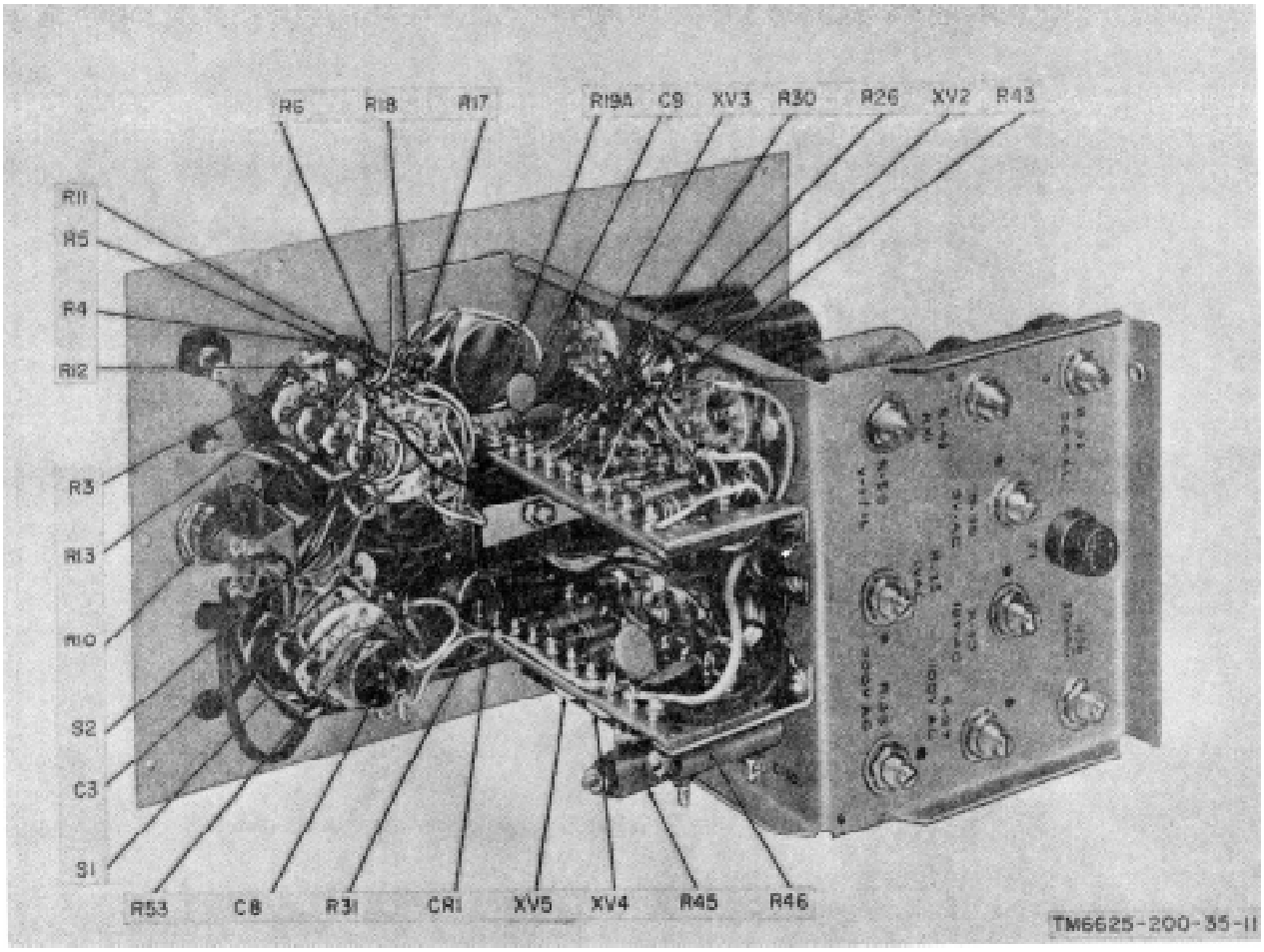

Figure 6-2. Multimeter ME-26B/U, ME-26C/U, and ME-26D/U chassis, bottom view.

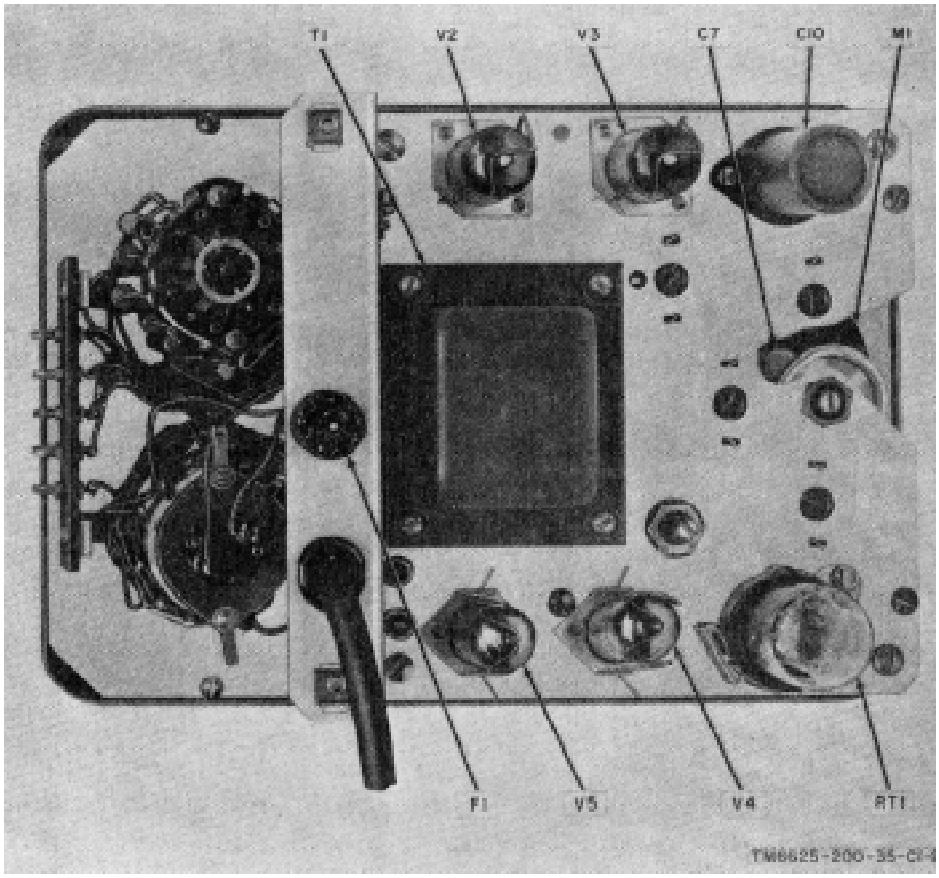

Figure 6-3. Multimeter ME-26A/U, chassis, rear view.

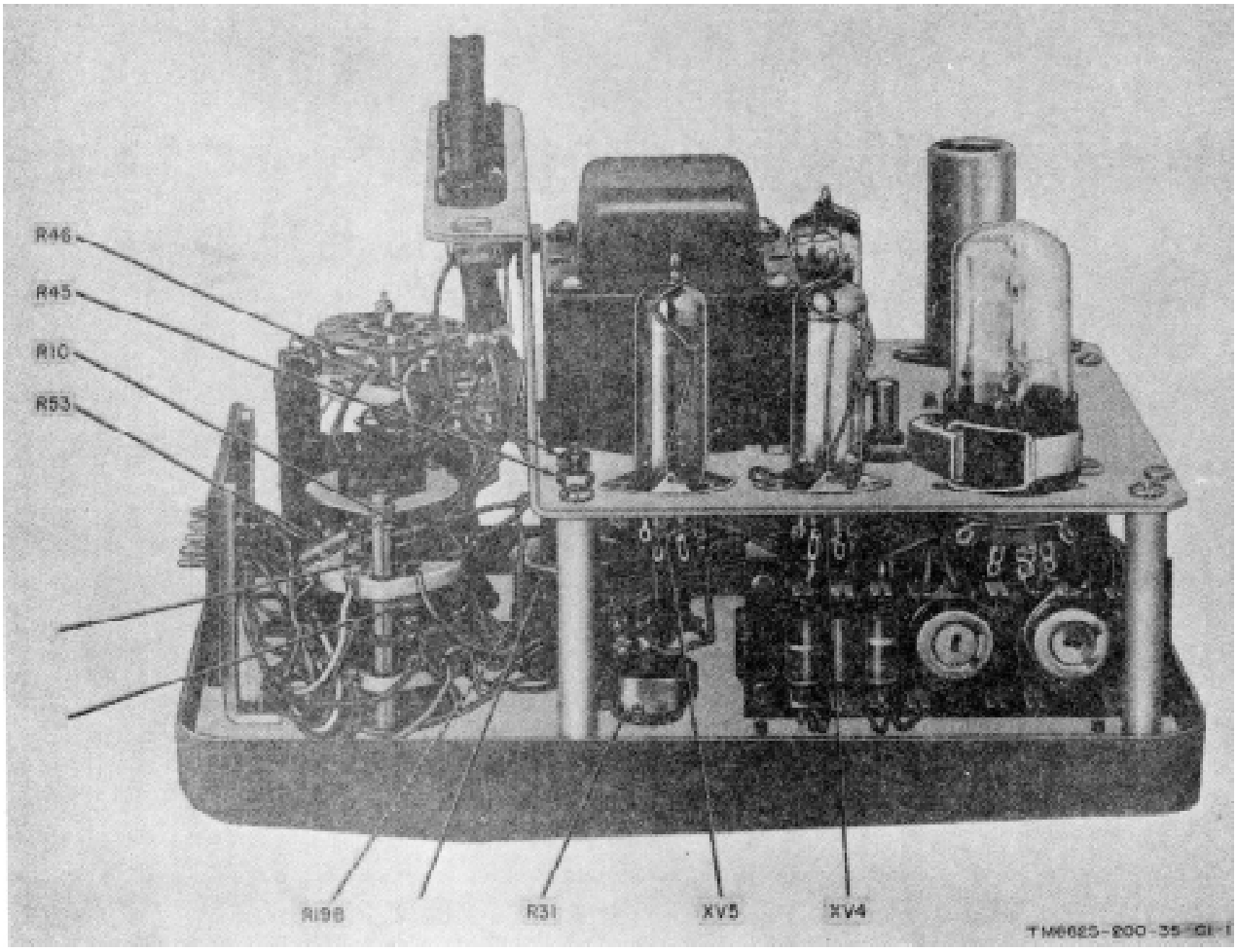

Figure 6-4. Multimeter ME-26A/U chassis, left side view.

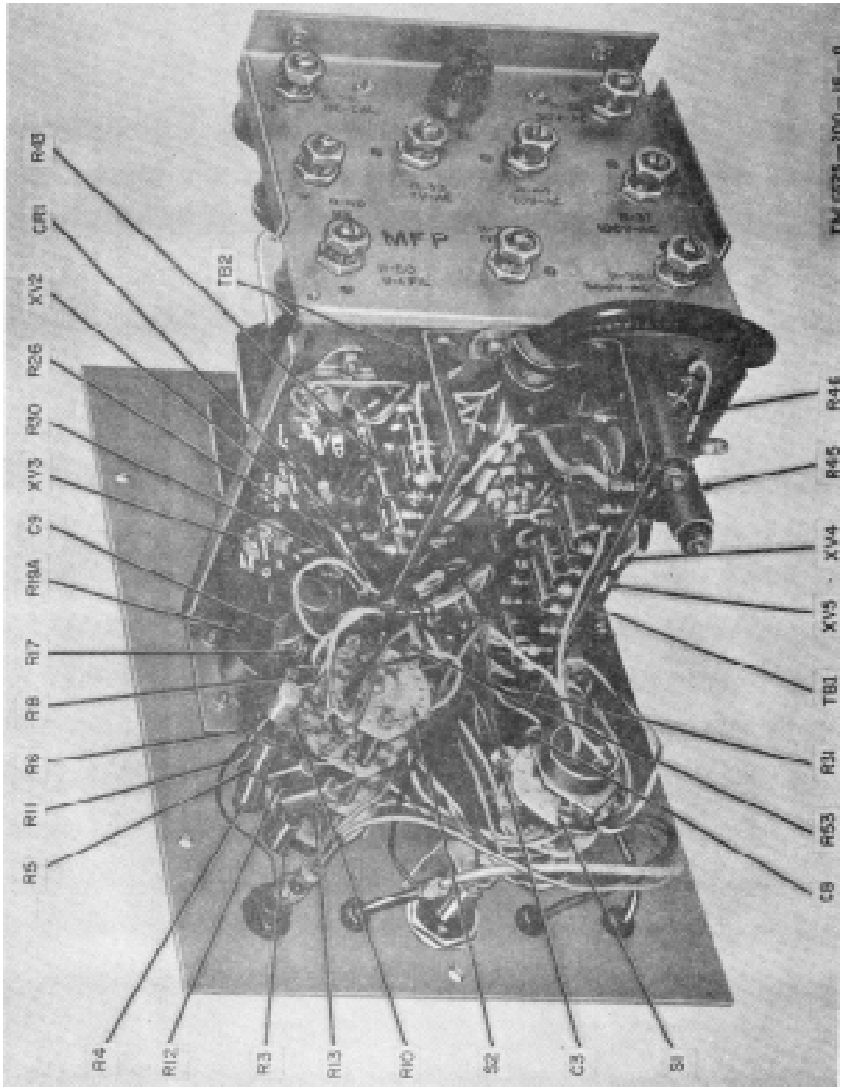

Figure 6-5. Multimeter ME-26A/U chassis, right side view.

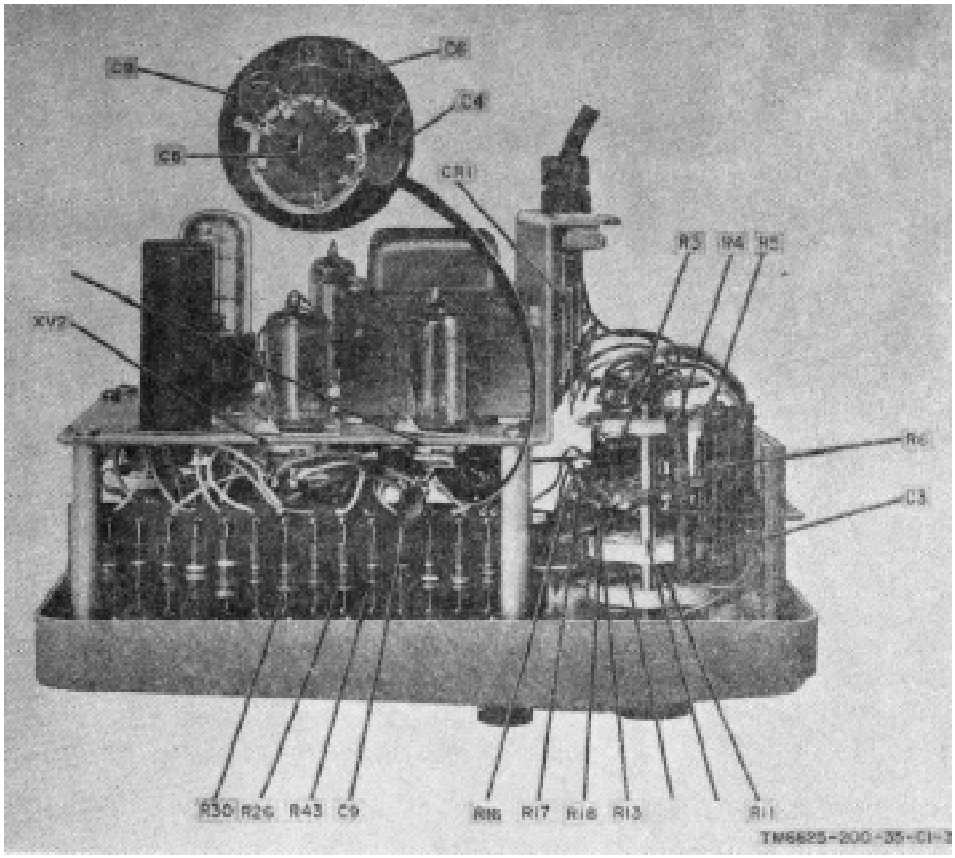

Figure 6-6. Changed Multimeters ME-26 B/U, ME-26 C/U, and Multimeter ME-26D/U chassis, rear view.

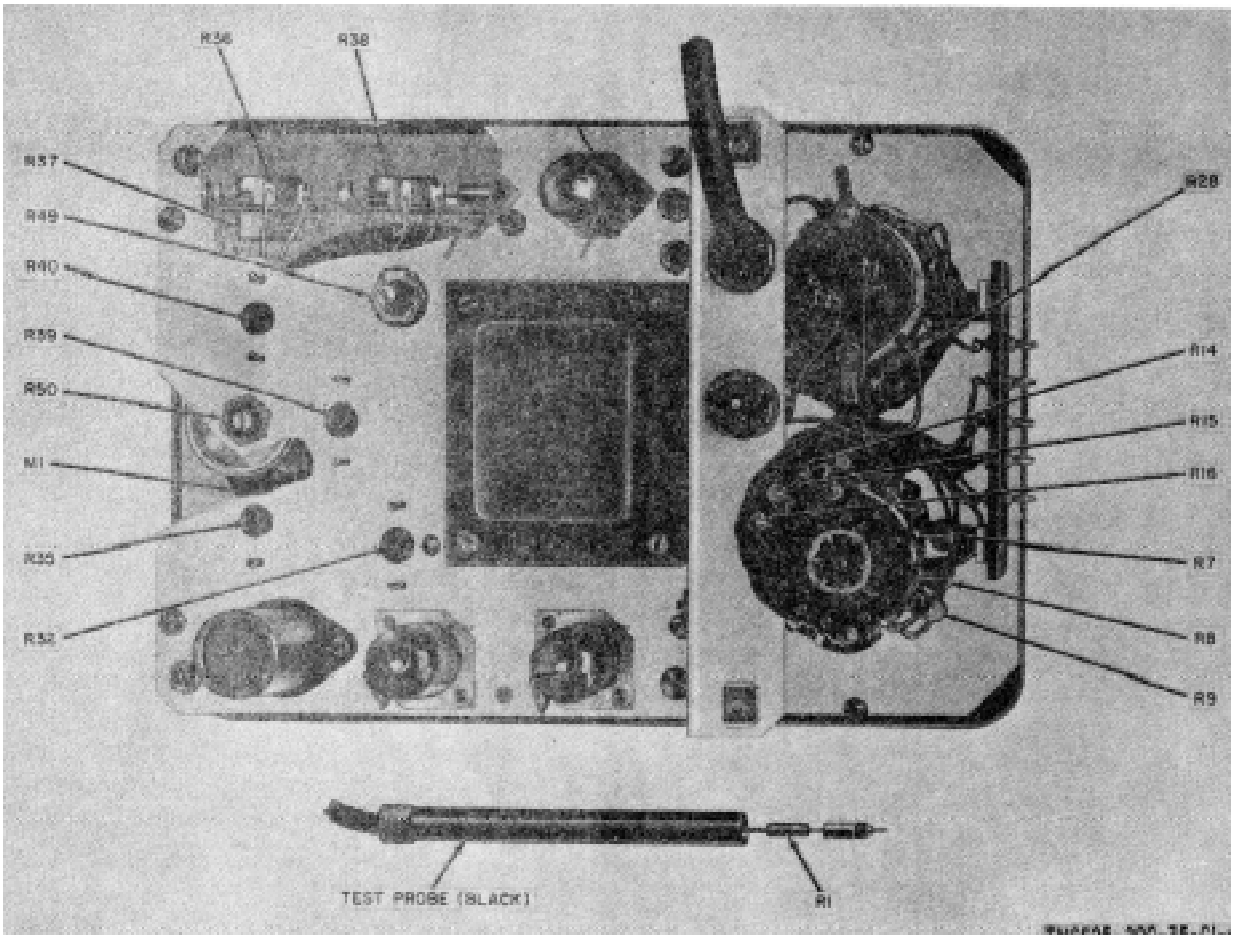

Figure 6-7. Multimeters ME-26A/U chassis, rear view showing location of alignment resistors.

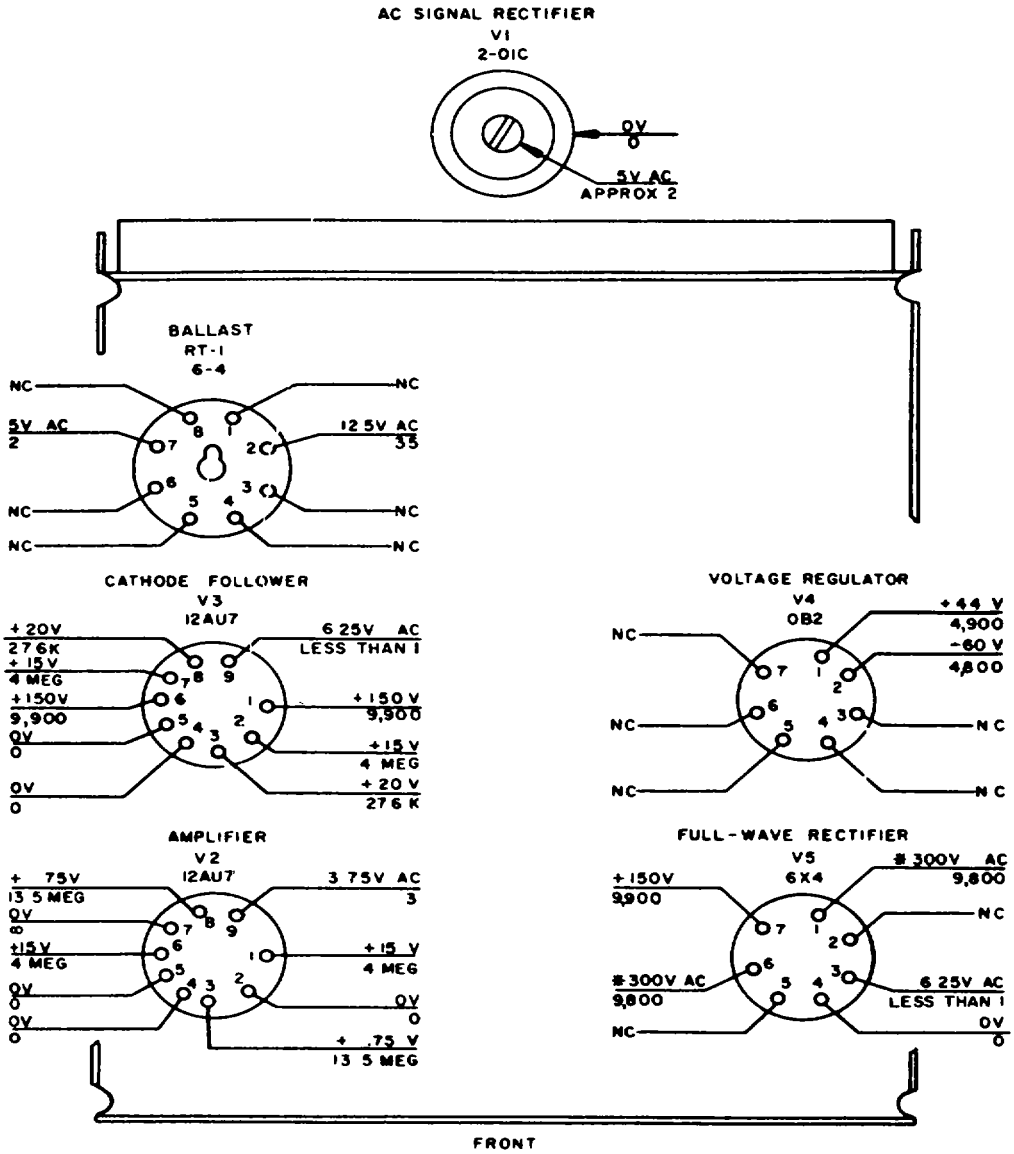

NOTES

1 ALL AC AND DC VOLTAGES MEASURED WITH MULTIMETER AN/URM-105 OR EQUIVALENTT WITH AC AND DC INPUTS SHORTED, POWER INPUT 117 V AC
2 AC VOLTAGES MARKED # MEASURED TO TERMINAL 2 ON TRANSFORMER T1. ALL OTHER VOLTAGES MEASURED TO CHASSIS GROUND
3 FUNCTION SWITCH AT +
4 RANGE SWITCH AT 1V
5 VOLTAGE READINGS ABOVE LINE, RESISTANCE READINGS BELOW LINE
6 UNLESS OTHERWISE SPECIFIED, RESISTANCES ARE IN OHMS, VOLTAGES ARE DC

TM 6625-200-35-8

Figure 6-8. Multimeters ME-26B/U, ME-2C/IU, and ME-26D/U, tube socket voltage and resistance diagram.

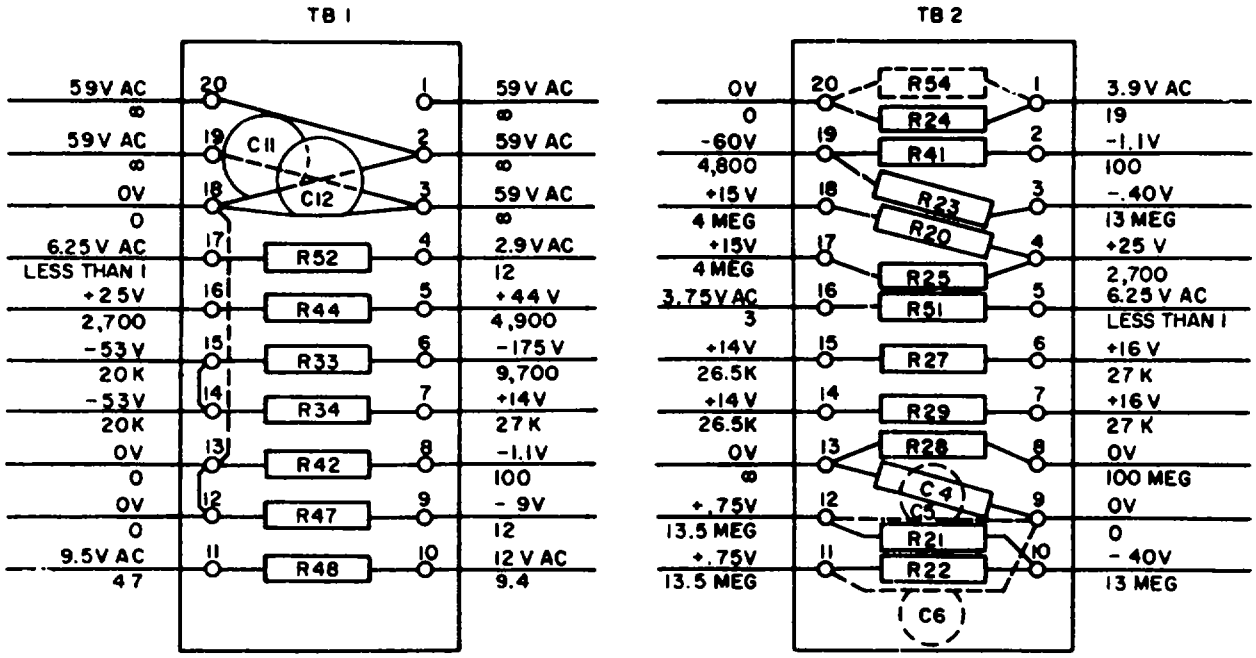

NOTES:

1. AC AND DC VOLTAGES MEASURED WITH MULTIMETER AN/UR--lO5 OR EQUIVALENT TO CHASSIS GROUND. AC AND DC INPUTS SHORTED POWER INPUT 117V AC.
2. RESISTANCES MEASURED FROM TERMINALS TO CHASSIS GROUND WITH TEST LEADS OPEN
3. FUNCTION SWITCH AT +
4. RANGE SWITCH AT IV.
5. VOLTAGE READINGS ABOVE LINE. RESISTANCE READINGS BELOW LINE
6. UNLESS OTHERWISE SPECIFIED, RESISTANCES ARE IN OHMS, VOLTAGES ARE DC.

TM6625-200-35-9

Figure 6-9. Multimeters ME-S6B/U, E-26C/U, and ME-S6D/U, terminal board voltage and resistance diagram.

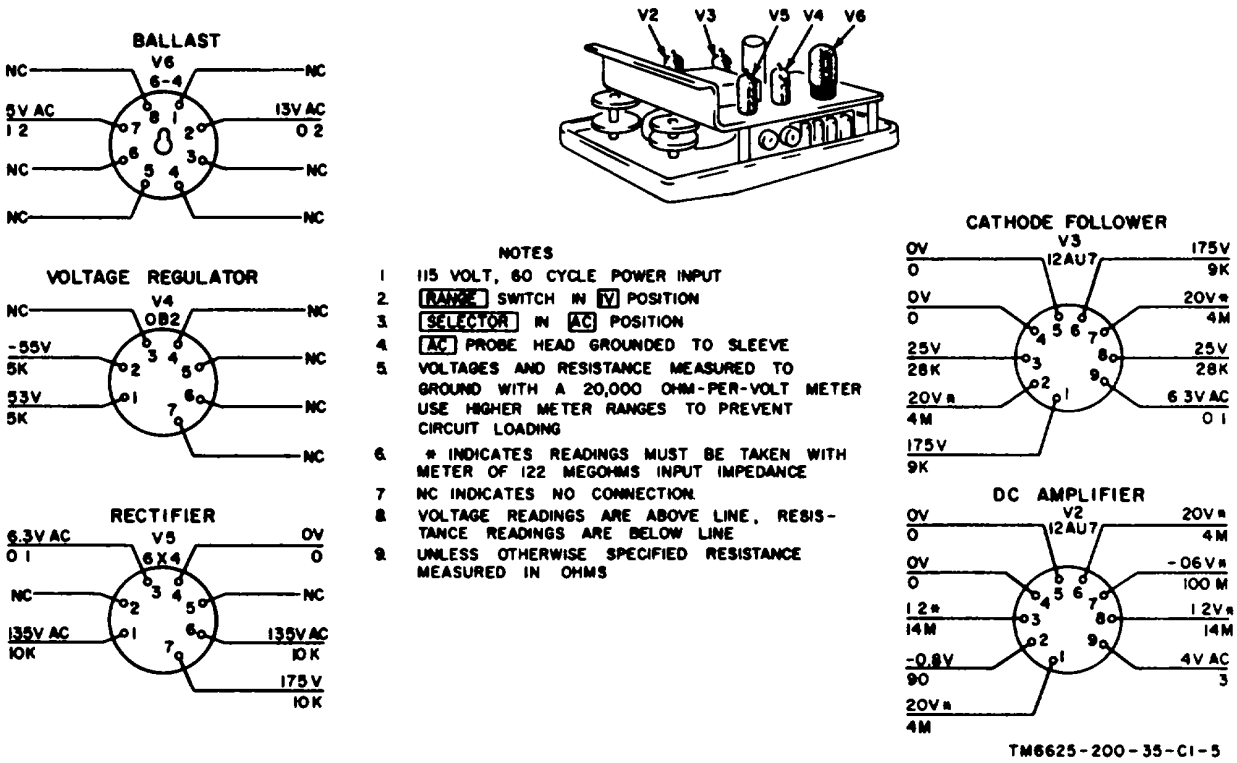

Figure 6-10. Multimeter ME-26 A/U tube socket voltage and resistance diagram.

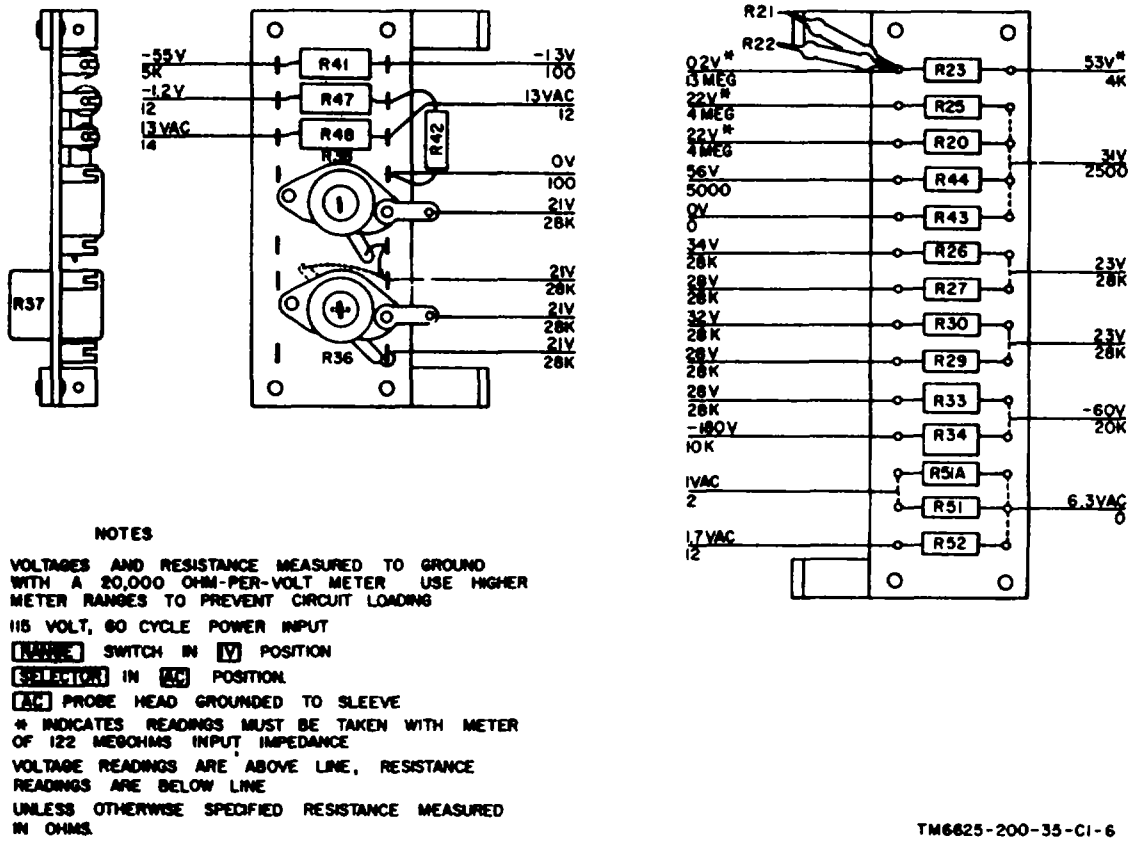

NOTES

1. VOLTAGES AND RESISTANCE MEASURED TO GROUND WITH A 20,000 OHM-PER-VOLT METER USE HIGHER METER RANGES TO PREVENT CIRCUIT LOADING
2. 115 VOLT, 60 CYCLE POWER INPUT
3. RANGE SWITCH IN V POSITION
4. SELECTOR IN AC POSITION
5. AC PROBE HEAD GROUNDED TO SLEEVE
6. * INDICATES READINGS MUST BE TAKEN WITH METER OF 122 MEGOHMS INPUT IMPEDANCE
7. VOLTAGE READINGS ARE ABOVE LINE, RESISTANCE READINGS ARE BELOW LINE
8. UNLESS OTHERWISE SPECIFIED RESISTANCE MEASURED IN OHMS.

Figure 6-11. Multimeter ME-26 A/U, terminal board voltage and resistance diagram.

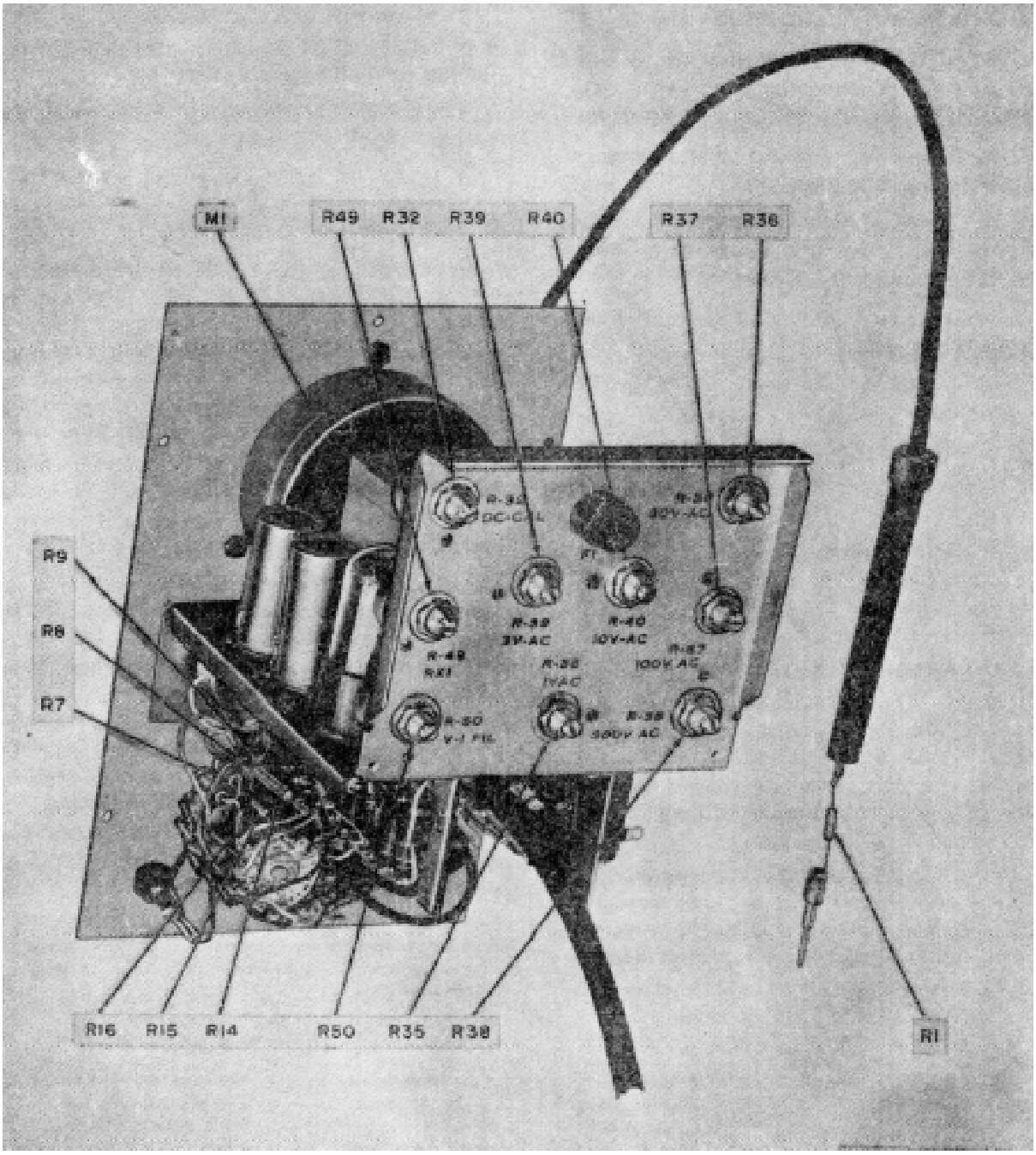

Figure 6-12. Unchanged Multimeters ME-26 B/U and ME-26 C/U chassis, rear view.

Section II. TROUBLESHOOTING MULTIMETER ME-26(*)/U

Caution: Do not attempt the removal or replacement of parts before reading the instructions given in paragraph 7-1.

6-3. Checking B+ Circuits for Shorts

a. When to Check. When any of the conditions given below exist, check for short circuits and clear the trouble before applying power.

(1) When the nature of the abnormal symptoms are not known.

(2) When abnormal symptoms, such as overheating, arcing, or a blown fuse, indicate possible power supply troubles.

b. Conditions for Tests. Prepare for short circuit tests as follows:

(1) the power cable from the power source.

(2) Set the FUNCTION switch to minus (-).

(3) Remove the chassis from the case

(4) Remove tubes V2 through V5, ballast RT1, and pilot lamp I1.

Note. It is not necessary to remove ac rectifier tube Vi when making this test.

c. Measurements. Use the AN/URM-105 and make the resistance measurement indicated in (1) below. If an abnormal result is obtained, make the additional isolating checks given in (2), (3), and (4) below. When the faulty part is found, repair the trouble before applying power to the equipment.

(1) Measure the resistance between pin 1 of tube socket XV5 (fig. 6-8 and 6-10) and chassis ground. The AN/URM-105 should indicate a normal resistance of approximately 9,800 ohms.

(2) If the resistance is approximately half of the normal indication (4,900 ohms), check for shorted capacitor C10 (fig. 6-1 and 6-8).

(3) If the resistance is very low, check the high-voltage winding in transformer T1 for a short to ground (fig. 9-3 and 9-6).

(4) If the resistance is higher than normal, check for open resistor R41, R42, or R46.

6-4. Troubleshooting Chart

a. General. In the troubleshooting chart (b below), procedures are given for localizing and isolating troubles to a stage or part. Parts locations are indicated in figures 6-1 through 6-7. Voltage and resistance measurements are shown in figures 6-8 through 6-11, overall schematic diagrams are shown in figures 9-3 and 9-4. When trouble has been localized to a particular stage, use voltage and resistance measurements to isolate trouble to a particular part.

b. Procedure. The chart below is given as an aid in locating trouble in the multimeter. The chart lists the symptoms, the probable troubles, and the corrective measures to be taken. If the trouble symptom is known, go directly to the appropriate item. If no symptoms are known, start with the first item and proceed until the trouble is found. If the trouble indicates the possibility of short circuits within the multimeter, make the short circuit tests described in paragraph 6-3 before applying power to the equipment.

Note. Before replacing a component, as indicated in the Checks and corrective measures column, check the component (para 6-5, 6-6, and 6-7) to be sure that it is defective.

Item No.	Switch position FUNCTION (SELECTOR)	RANGE	Trouble symptom	*Probable trouble*	*Checks and corrective measures*
1	Any, except OFF.	Any.	Pilot lamp 11 does not light; meter M1needle does not deflect.	*a.* Fuse Fl open.	*a.* Replace fuse Fl (para 4-1).
				b. Power cable defective.	*b.* Repair or replace power cable.
				c. Transformer T1 defective.	*c.* Replace transformer T1 (fig. 6-1 and 6-3).

Item No	Switch position FUNCTION (SELECTOR)	RANGE	Trouble symptom	Probable trouble	Checks ad corrective measures
				d. Capacitor C11 or C12 defective. (Not used on ME-26A/U.)	*d.* Replace defective capacitor (fig. 6-9).
				e. FUNCTION switch S1 defective.	*e.* Replace FUNCTION switch S1 (SELECTOR switch on ME-26A/U) (fig. 6-2 or 6-4).
2	Any, except OFF.	Any.	Pilot lamp 11 does not light; meter operates normally.	Pilot lamp I1 defective.	Replace pilot lamp I1 (para 4-10).
3	Any, except OFF.	Any.	Meter M1 needle does not deflect during initial warmup, or during any type operation; pilot lamp 11 illuminates	a. Tube V2, V3, or V5 defective.	*a.* Check for and replace defective tube (para 6-5).
				b. Resistor R28 or R61 (or R51A in the 6-5 or 6-9). ME-26A/U) open.	*b.* Replace resistor (fig
				c. Capacitor C4 shorted.	*c.* Replace capacitor C4 (fig. 6-5 or 6-9).
				d. Resistor R23 open.	*d.* Replace resistor R23 (fig. 6-4 or 6-9).
				e. Resistor R20 or R25 open.	*e.* Replace defective resistors (fig. 6-2 and 6-4, or 6-9 and 6-11)
				f. Resistor R41, R43, R44, R45, or R46 open.	*f.* Replace defective resistor (fig. 6-2 and 6-4, or 6-9 and 6-11).
				g. Resistor R19A, R26, or R30 open.	*g.* Replace defective resistor (fig. 6-2 or 6-4 and 6-5).
				h. Resistor R33 or R34 open.	*h.* Replace defective resistor (fig. 6-9 or 6-11).
				t. Capacitor C7 or C8 shorted.	*t.* Replace defective capacitor (fig 6-1 and 6-2, or 6-3 and 6-4).
				j. Capacitor C10 defective.	*j.* Replace capacitor C10 (fig 6-1 or 6-3).
				k. FUNCTION switch S1 (SELECTOR switch on ME-26A/U) defective.	*k.* Replace switch S1 (fig. 6-2 or 6-4).
				l. RANGE switch S2 defective.	*l.* Replace switch S2 (fig. 6-2 or 6-4)
				m. Meter M1 defective.	*m.* Replace meter M1 (fig. 6-1 or 6-3).
4	Any, except OFF.	Any.	Meter M1 indication erratic during initial warmup and during all types of operation.	*a.* Tube V4 defective.	*a.* Replace tube V4 (para 6-5).
				b. Resistor R21 or R22 defective.	*b.* Replace defective resistor (fig. 6-9 or 6-11).
				c. Capacitor C5 or C6 defective.	*c.* Replace defective capacitor (fig. 6-5 or 6-9).
				d. Resistor R19A, R20, R25, R27, or R29 open.	*d.* Replace defective resistor (fig. 6-2 and 6-4, or 6-9 and 6-11).
5 -	- or +.	1V.	Meter M1 cannot be set at zero with ZERO	*a.* Resistor R1 open.	*a.* Replace resistor R1 (fig. 6-6 or 6-7).

Item No	Switch position FUNCTION (SELECTOR)	RANGE	Trouble symptom	Probable trouble	Checks ad corrective measures
			ADJ control R19A; COMMON clip connected to DC probe; pilot lamp 11 illuminates.	*b.* Tube V2 or V3 defective.	*b.* Replace defective tube (para 6-5).
6	-- or +.	1V.	Low or no indication on meter M1 with dc voltage applied between DC probe and COMMON clip; pilot lamp I1 illuminates.	*a.* One of voltage-divider resistors (R3 to R13) defective. *b.* Resistor R42 open. *c.* DC-CAL control R32 defective. *d.* RANGE switch S2 defective.	*a.* Replace defective resistors (fig. 6-2 and 6-4, or 6-7 and 6-9). *b.* Replace resistor R42 (fig. 6-9 or 6-11). *c.* Replace DC-CAL control R32 (fig. 6-6 or 6-7). *d.* Replace RANGE switch S2 (fig. 6-2 or 6-5).
7	Ac	1V.	Meter M1 cannot be set at zero with AC ZERO control R53. Ground clip AC R2 open. probe connected to tip, meter M1 adjusted with ZERO ADJ control R19A, and pilot lamp I1 Illuminates	a. Open filament in tube V1. b. Capacitor S1 or resistor c. Capacitor C2 or C3 shorted. d. Capacitor C9 defective. e. AC ZERO control R53 (R19B on ME-26A/U) defective. f. 1V-AC control R35 defective.	*a.* Replace tube V1 (para 6-5 and 7-2). *b.* Replace defective component (para 7-2 and 7-3, and fig. 7-1 and 7-2). *c.* Replace shorted capacitor (fig. 6-2, 6-5, 7-1 and 7-2). *d.* Replace capacitor C9 (fig. 6-2 or 6-5). *e.* Replace AC ZERO control R53 or R19B (fig. 6-2 or 6-4). *f.* Replace IV-AC control R35 (fig. 6-4 or 6-7).
8	AC.	Any except 1000V.	Meter M1 does not deflect ac voltage applied between tip and ground clip of AC probe; probe does not get warm after 15 minutes; pilot lamp I1 illuminates	a. Open filament in tube V1. b. Ballast RT1 open. c. V1 FIL control RS0 defective	*a.* Replace tube VI (para 6-5 and 7-2). *b.* Replace ballast RT1 (fig. 6-1 or 6-3). *c.* Replace RSO (fig. 6-6 or 6-7), and then adjust V1 FIL control RSO (para 7-5).
9	AC.	Any.	Meter M1 defects with dc voltage applied to AC ground.	Capacitor C1 shorted.	Replace capacitor C1 (para 7-2 or 6-6). Replace probe tip (fig. 7-2).
10	AC.	1V.	Meter M1 does not deflect; ac voltage (within correct range) applied to AC probe Multimeter operates on all other functions.	1V-AC control 15 per	Replace 1V-AC control R39 (fig. 6-6 or 6-7).
11	AC.	3V.	Same as item 10 above.	3V-AC control R39 open.	Replace 3V-AC control R39.
12	AC.	10V.	Same as item 10 above.	10V-AC control R40 open.	Replace 10V-AC control

Item No	Switch position FUNCTION (SELECTOR)	RANGE	Trouble symptom	Probable trouble	Checks ad corrective measures
13	AC.	30V.	Same as item 10 above.	30V-AC control R3S open.	Replace 30V-AC control R36.
14	AC.	100V.	Same as item 10 above.	100V-AC control R87 open.	Replace 100V-AC control R37.
15	AC.	300V.	Same as item 10 above .	30OOV-AC control R38 open.	Replace 300V-AC control R38.
16	OHMS.	RX1.	Meter M1 cannot be set to full scale with OHMS ADJ control R31; meter has been adjusted with ZERO ADJ control R19A; no external resistance connected between OHMS probe and COMMON clip; and pilot lamp I1 illuminates.	*a.* Rectifier CR1 defective. *b.* OHMS ADJ control R31 defective. *c.* Resistor R47, R48, or R49 defective.	*a.* Replace rectifier CR1 (fig. 6-2 or 6-4). *b.* Replace OHMS ADS control (fig. 6-2 and 6-4). *c.* Replace defective resis tor (fig. 6-6, 6-7, 6-9, and 6-11).
17	OHMS.	RX l MEG.	Same as item 16 above.	*a.* Resistor R41 or R32 defective. *b.* Resistor R46 defective. *c.* Resistor R28 defective. *d.* One of the voltage-divider resistors (R3 to R6 and R10 to R13) defective.	*a.* Replace defective resis-tor (fig. 6-9 or 6-11). *b.* Replace defective resis-tor (fig. 6-2 or 6-4). *c.* Replace defective R28 (fig. 6-7 and 6-9). *d.* Replace defective resis-tor (fig. 6-2, 6-4, 6-6, and 6-7).
18	OHMS.	RX1.	Meter Ml deflects beyond full scale; OHMS ADJ control R31 has no effect.	Resistor R47 open.	Replace resistor R47 (fig.6-9 or 6-11).

6-5. Tube-Testing Techniques

If tube failure is suspected, use the applicable procedure given below to check the tubes.

Note If tube V1, V2, or V3 is replaced, be sure to align the multimeter (para 7-4 through 7-8). To remove tube V1, refer to procedures given in paragraphs 7-2 and 7-3,

a. Selection of Replacement Tube. To select new tube V2 or V3, checks must be made as follows:

(1) Amplifier balance with line voltage at 115 volts.

(2) Microphonics.

(3) Cathode emission.

(4) Gas.

(5) Voltage calibration.

(a) To select tubes for balance, proceed as follows:

1. Remove tube V2.

2. With tube V3 in its socket, check the ZERO ADJ range both +DC and -DC switch positions. The range should be the same for both the + and - positions. Substitute several tubes until the best one is found which has an equal range adjustment.

3. The ZERO ADJ control should allow the meter pointer to deflect one-third of the way upscale in both the +DC and -DC volts position.

(b) To check the tubes for microphonics:

1. Set the ZERO ADJ control to zero the meter.

2. Tap tubes V2 and V3.

3. If the meter moves erratically, either tube V2 or V3 is microphonic.

4. tube V2. (Be sure to check for balance.) If the meter still moves erratically when tubes V2 and V3 are tapped, replace tube V3.

(c) To check for cathode emission, proceed as follows:

1. Connect the multimeter to the variac and set the output of the variac to 115 volts, 60 cycles ac. Use Multimeter AN/URM105.

2. Zero Multimeter ME-26(*)/U and allow the meter to warm up for 5 minutes.

3. Reduce the output of Variable Transformer CN-16A/U to 103 volts. Let the multimeter sit for at least 1 minute with this input voltage.

4. The zero drift of the meter pointer should be less than 5 percent for both +DC and -DC positions.

5. Adjust the CN-16A/U for 115 volts.

6. After the multimeter has stabilized at 115 volts, adjust the variac for a 127-volt output.

7. After 1 minute, the drift should be less than 5 percent.

(d) To check for gas, proceed as follows:

1. Set the RANGE switch to the 1V-DC position. Adjust the meter to zero.

2. Rotate the RANGE switch to the 300V range. The zero adjustment should not change; if it does move, the tubes are gassy and should be discarded.

(e) To check voltage alignment, follow the procedures given in paragraph 7-5 through 7-11 after 50 hours of break-in time.

b. Tube Testing Method. Remove and test one tube at a time. Discard a tube only if its defect is obvious or if the tube tester shows it to be defective. Do not discard a tube that tests at or near its minimum test limit on the tube tester. Put back the original tube, or insert a new one if required, before testing the next tube.

c. Tube Substitution Method. Replace a suspected tube with a new tube. If the equipment still does not work, remove the new tube and put back the original tube. Repeat this procedure with each suspected tube until the defective tube is located.

6-6. Isolating Trouble Within Stage

When trouble has been localized to a stage, use the following techniques to isolate the defective part.

a. Test the tube involved, either in the tube tester or by substituting a known good tube of the same type (para 6-5).

b. Take the voltage measurements at the tube sockets (fig. 6-8 and 6-10) or at the terminal boards (fig. 6-9 and 6-11) related to the stage in question.

c. If readings vary more than ±10 percent from normal, remove the power from the multimeter and take resistance measurements at the tube sockets (fig. 6-8 and 6-10) or at the terminal boards (fig. 6-9 and 6-11).

d. Use the wiring diagrams (fig. 9-5 and 9-6) to trace and isolate the faulty component.

6-7. DC Resistance of Transformer Windings

The dc resistance of the winding of transformer T is shown in a below for Multimeters ME-36B/U, ME-26C/U and ME-26D/U, and in b below for Multimeter ME-26A/U.

a. Multimeters ME-26B/U, ME-26C/U, and ME-26D/U.

Terminals	Ohms
1 and 2	310.
2 and 3	310.
4 and 5	18.
6 and 7	18.
8 and 9	Less than 1.
9 and 10	Less than 1.

b. Multimeter ME-26A/U.

Terminals	Ohms
1 and 2	176.
2 and 3	180.
4 and 5	Less than 1.
5 and 6	Less than 1.
7 and 9	175.
8 and 10	18.

CHAPTER 7
REPAIRS AND ALIGNMENT

Section I. REPAIRS

7-1. General Parts Replacement Techniques

Most of the Multimeter ME-26(*)/U parts can be reached without special procedures. The following precautions apply:

a. Be sure to follow the instructions given in paragraph 7-2 and 7-3 to remove tube V1 from the AC probe. Tube V1 is easily broken if squeezed, mishandled, or forced.

b. All the voltage-divider resistors (R3 through R18 and R47) are precision-type resistors. When soldering these resistors, keep the tip of a long-nosed pliers between the end of the resistor and the point being soldered. This procedure will prevent excessive heat from entering the resistor and changing its value.

c. When removing switch S1 or S2, make a note of the position of the pointer and tag all leads before unsoldering them.

Note. Before mounting the switches, all leads should first be soldered to the terminals.

d. To remove transformer T1 (fig. 6-6), it may be necessary to remove the screws from one end of each terminal board and then shift the terminal boards slightly.

e. To remove transformer T1 on Multimeter ME-26A/U (fig. 64), remove the main chassis from the front panel by removing the four retaining screws located at the corners of the main chassis.

f. To remove terminal boards TB1 and TB2, it is necessary to first remove rectifier CR1.

g. Check all connections against the wiring diagrams (fig. 9-5 and 9-6) before disconnecting and after reconnecting to a component.

7-2. Disassembly and Reassembly of AC Probe, Changed Multimeters ME-268/ U and ME-26C/U, and Multimeter ME-26D/U

(fig. 7-1)

a. Disassembly.

(1) Unscrew the tip and capacitor C1 assembly from the plug of the AC probe. If the screw joint is too tight to turn manually, wrap a rubberband around the tip to obtain a better grip. Slide back the jacket.

(2) Remove the mounting screws that fasten the end assembly to the barrel.

(3) Gently pull back on the end assembly until it is approximately one-quarter of an inch out of the barrel.

(4) Remove the mounting screws at the plug end of the barrel.

***Caution*: Do not bend or twist the plug when removing it from the barrel.**

(5) With a straight, smooth action, pull the plug out of the barrel.

(6) Carefully slide the barrel off socket XV1 and the end assembly.

(7) Slide the spring contact off the end of tube V1.

(8) Gently pull tube V1 out of the contact springs of socket XV1.

b. Reassembly.

(1) Insert tube V1 into socket XV1; be sure that the flat center contact of the tube lines up with the flat center contact of the socket. *Do not force the tube into the socket.*

(2) Carefully slide the spring contact onto the end of tube V1.

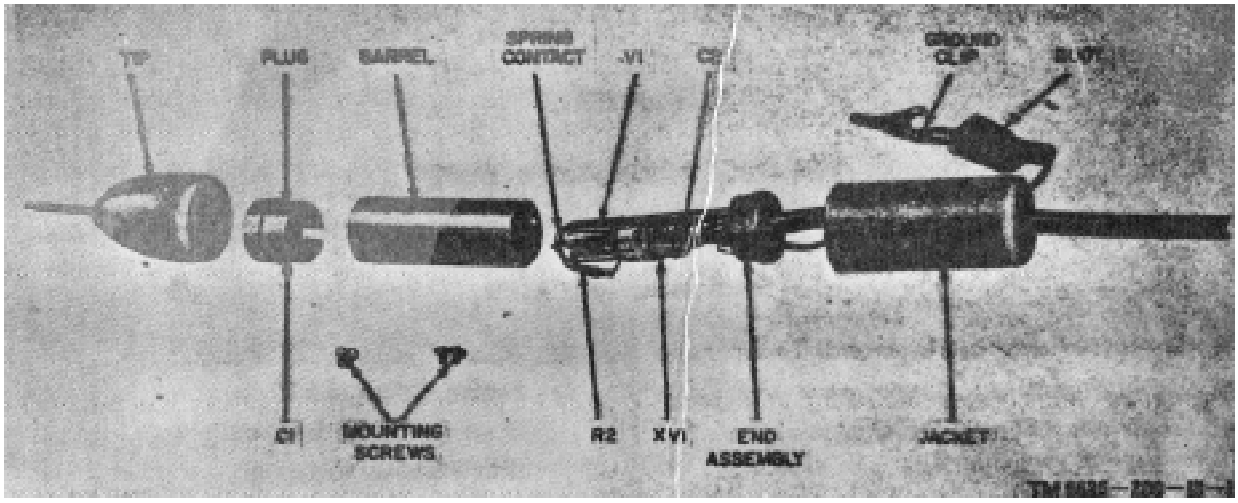

Figure 7-1. Changed Multimeters ME-26B/U and ME-C/U, and Multimeter ME-t6D/U AC probe disassemble

(3) Slide the barrel over socket XV1; be sure that tube V1 is properly centered inside the barrel and not off to one side.

(4) Fasten the end assembly to the barrel with the mounting screws.

Caution: Do not use excessive force. If the two holes in the plug do not line up with the two holes in the barrel, remove the plug, rotate 180°, and reinsert it into the barrel. Do not twist or rotate the plug when it is inside the barrel

(5) Insert the plug into the barrel and fasten with the mounting screws.

(6) Screw the tip and capacitor C1 assembly into the threaded end of the plug; be sure that the assembly makes a tight contact.

7-3. Disassembly and Reassembly of AC Probe, ME-26A/U

(fig. 7-2)

a. Disassembly.

(1) Remove the ac ground clip, including the leads.

(2) Unscrew the probe head from the probe body.

(3) Unscrew the sleeve from the cap retainer nut; be careful not to jar tube V1.

(4) Remove the tube contact.

(5) Remove the mounting screws that fasten the sleeve to the probe body. Remove the probe body by pushing the body toward the tapped end of the sleeve.

(6) Gently pull tube V1 out of socket XV1.

b. Reassembly.

(1) Insert tube V1 into socket XV1; be sure that the flat center contact of the tube lines up with the flat center contact of the socket. Do not force the tube into the socket.

(2) Insert the probe body into the sleeve and insert the screws that hold the sleeve to the probe body.

(3) Place the tube contact onto the plate connector of V1.

(4) Screw in the cap retainer nut.

(5) Place the ac ground clip in position.

7-4. Disassembly and Reassembly of AC Probe on Unchanged Multimeters ME-26B/U and ME-26C/U

a. Disassembly.

(1) Unscrew the tip and capacitor C1 assembly from the plug of the AC probe. If the

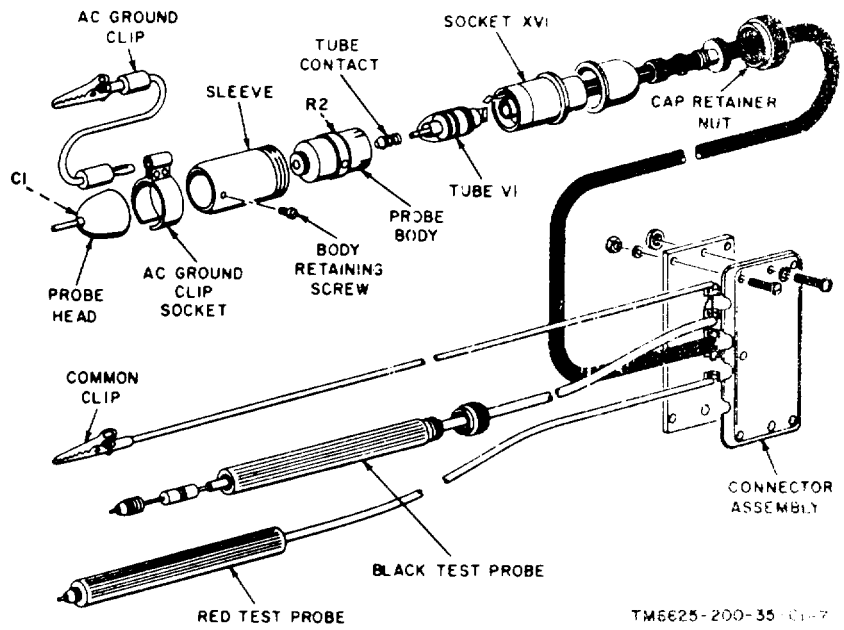

Figure 7-2. Multimeter ME-26A/U AC probe disassembled.

screw joint is too tight to turn by hand, wrap a rubber band around the tip to obtain a better grip.

(2) Remove the mounting screws that fasten the end assembly to the barrel.

(3) Gently pull back on the end assembly until it is approximately one-quarter inch out of the barrel.

(4) Remove the mounting screws at the plug end of the barrel.

(5) "With a straight smooth action, pull the plug out of the barrel.

***Caution*: Do not bend or twist the plug when removing it from the barrel.**

(6) Carefully slide the barrel off socket XV1 and the end assembly.

(7) Slide the spring contact off the end of tube V1.

(8) Gently pull tube V1 out of the contact springs of socket XV1.

b. Reassembly.

(1) Insert tube V1 into socket XV1; be sure that the flat center contact of the tube aligns with the flat center contact of the socket. *Do not force the tube into the socket.*

(2) Carefully slide tie spring contact onto the end of tube V1.

(3) Slide the barrel over socket XV1; be sure that tube V1 is properly centered inside the barrel and not off tot one side.

(4) Fasten the end assembly to the barrel with the mounting screws.

(5) Insert the plug into the barrel and fasten with the mounting screws.

***Caution*: Do not use excessive force. If the two holes in the plug do not align with the two holes in the barrel, remove the plug, rotate it 180"', and reinsert it into the barrel. Do not twist or rotate the plug when it is inside the barrel.**

(6) Screw the tip and capacitor C1 assembly into the thread end of the plug; be sure that the assembly makes a tight contact.

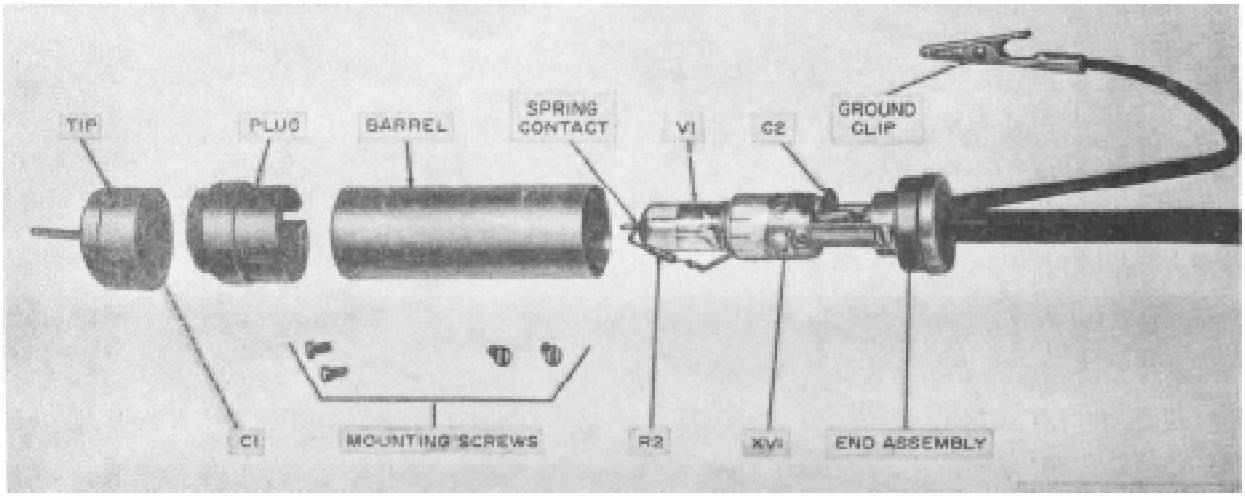

Figure 7-3. Unchanged Multimeters ME-26B/U and ME-26C/U, AC probe disassembled.

Section II. CHANGES TO MULTIMETERS ME-26B/U AND ME-26C/U TO PREVENT SHOCK HAZARD

7-5. General

Because of the circuit construction found in Multimeters ME-26A/U, ME-2 B/U, and ME-26C/U, the possibility of a shock hazard or damage to the equipment exists if it is improperly used. The shock hazard possibility exists because the COMMON lead of the multimeters is wired directly to the chassis ground. The shock hazard can be removed from Multimeters ME-26B/U and ME-26C/U by isolation of the COMMON lead from the chassis ground. Isolation cannot be done in Multimeter ME-26A/U because it adversely affects the ac frequency response. To change Multimeters ME-26B/U and ME-26C/U, follow the procedures given in paragraph 7-7.

7-6. Parts Required for Changing Multimeters ME-26B/ U and ME-26C/U

Nomenclature or description	*Quantity*	*Federal Stock No.*
Lead, Test: AC, Probe Assembly less diode V1.	1	6625-898-7270
Electron Tube: Hewlett-Packard P/N 212-201V.	1	5960-688-9020
Capacitor: 330 μμf _ _ _ _	1	5910-993-3116
Terminal, Standoff _ _ _	2	5940-675-5860
Bushing, Strain Relief _ _	1	5975-578-2836

7-7. Change Procedure

To change Multimeters ME-26B/U and ME-26C:/U, refer to figure 7-4 and proceed as follows:

a. Remove the power cable from the power source.

b. Remove the two slotted or Phillips head screws (as applicable) from the top of the instrument case.

c. Unlock the four captive screws in the rear of the instrument case and remove the plate.

d. Remove the six slotted or Phillips head screws (as applicable) from the panel of the instrument. Place the instrument face down and remove the two slotted or Phillips head screw that secure the chassis inside the rear of the instrument. Be careful to move the 115-volt power cable forward when removing the chassis from the instrument case.

e. Using wire cutters, snip the three wires connected to the ac probe. Using masking tape or equal, label the wires connected to the center conductor and inner shield. Snip off the wire to the outer shield at the ground connec-

tion closest to the RANGE switch. Remove the ac probe from the front panel.

f. Using wire cutters, snip off all remaining wires (three) that are connected to the ground connector closest to the RANGE switch

g. Using wire cutters, snip off the wire that is connected to the shield of the dc probe.

h. Mount the standoff insulators on XRT-1 and XV-5 (fig. 7-3).

i. Using hookup wire, measure the amount of wire necessary to connect the shield on the dc probe lead to the standoff insulator mounted to XV-5. Cut the -length as necessary. Route this wire close to the front panel and chassis.

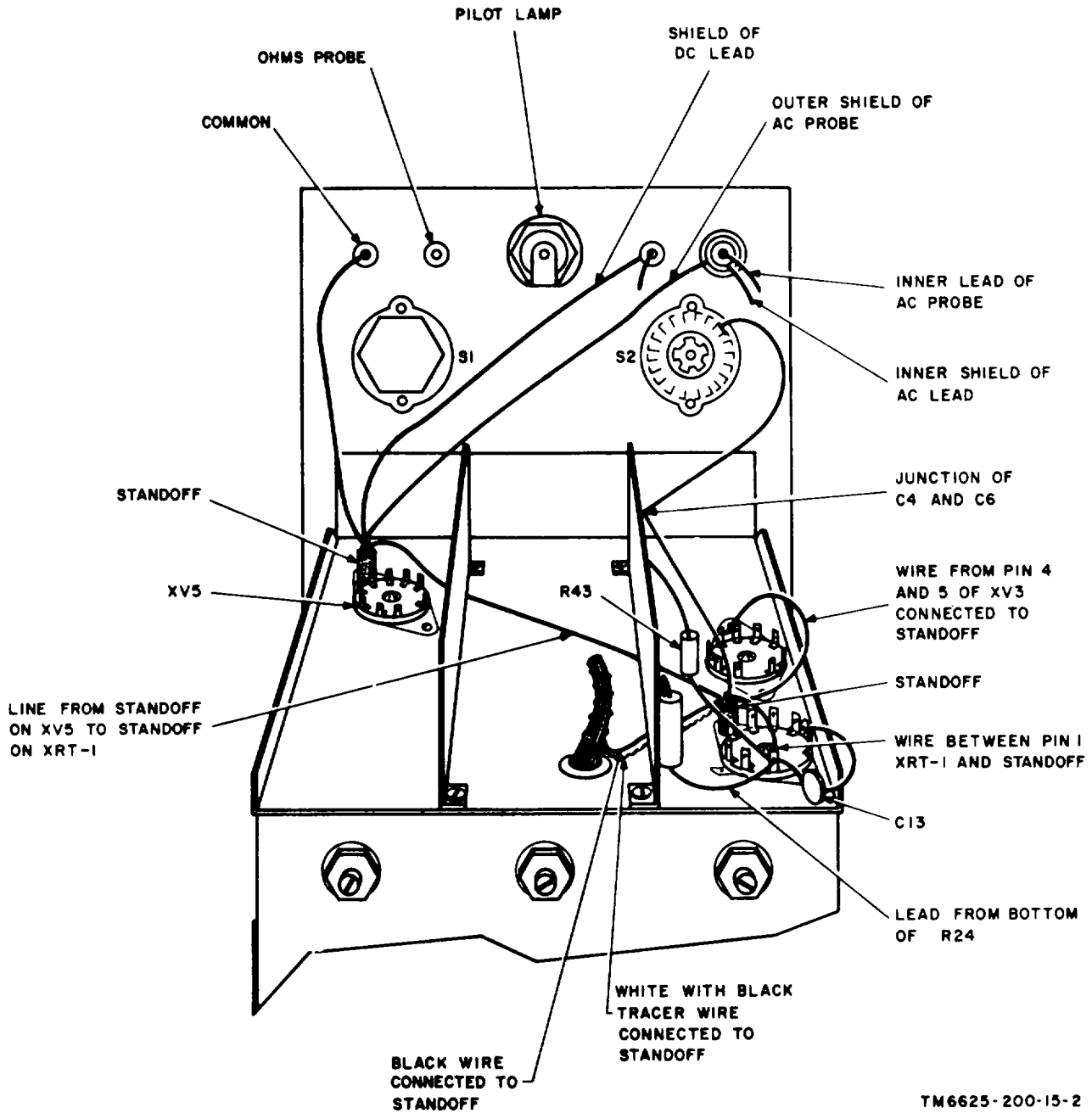

Figure 7-4. Under chassis view showing parts changed in Multimeters ME-26B/U and ME-26C/U.

j. Using the wire cutters, strip back one-quarter inch of insulation from each end of the wire measured (i above). Wrap one end of this wire around the shield wire of the dc probe and solder it to the dc probe. Be careful when soldering; excessive heat will melt the insulation, which could result in a short circuit. Connect the other end of this wire to the standoff insulator mounted to XV-5. Use spaghetti as necessary.

k. Prepare the AC probe cable in accordance with figure 7-5. Mount the AC probe cable in the front panel; use a new strain relief bushing.

l. Using hookup wire, measure that amount of wire necessary to connect the outer shield of the AC probe cable to the standoff insulator mounted to XV-5. Cut the length as necessary. Route this wire close to the front panel and chassis.

m. Using the wire stripper, strip back three-quarter inch of insulation from one end of this wire. Place 1 inch of 1/8-inch diameter spaghetti over this wire as required. Twist the wire around the outer shield connection and solder. Move the spaghetti down over the soldered connection and up flush with the outer shield of the AC probe. Connect the other end to the standoff mounted to XV-5. Do not solder at this time.

n. Locate the wire previously labeled as going to the inner shield of the AC probe cable. Strip back three-quarter inch of insulation and place 1 inch of spaghetti over it. Twist the wire around the inner shield connection and solder. Push the spaghetti down over the soldered connection and up flush with the inner shield.

o. Locate the wire previously labeled as going to the inner conductor of the AC probe cable. Strip back three-quarter inch of insulation and place 1 inch of spaghetti over it. Twist the wire around the center conductor connection and solder. Move the spaghetti down over the soldered connection and up so as to cover all exposed wire.

p. Connect the COMMON lead to the standoff insulator connected to XV-5. Do not solder at this time.

q. Using hookup wire, measure the amount of wire necessary to connect the standoff insulator connected to XV- to the one connected to XRT-1. Route this wire close to the chassis and the front panel. Cut off the amount of wire measured and strip off one-half inch of insulation from each end.

r. Using the wire that was prepared (q above), wrap one end around the standoff insulator connected to XV-5. Solder this connection (there should be four wires connected to this point). Connect the other end of this wire to the standoff insulator mounted on XRT-1.

s. Disconnect all the wires that are grounded on XRT-1, including resistor R43 and the wire from the bottom of resistor R24.

t. Connect R43 to pin 1 of XRT-1. Using hookup wire, measure the amount of wire necessary to connect pin 1 of XRT-1 to the standoff insulator mounted to XRT-1. Cut off this amount of wire and strip back one-half inch of insulation from each end. Wrap one end around the standoff insulator connected to XRT-1 and the other around pin 1 of XRT-1.

u. Slip one-half inch spaghetti over each lead of 330-;if capacitor. Connect one end of the

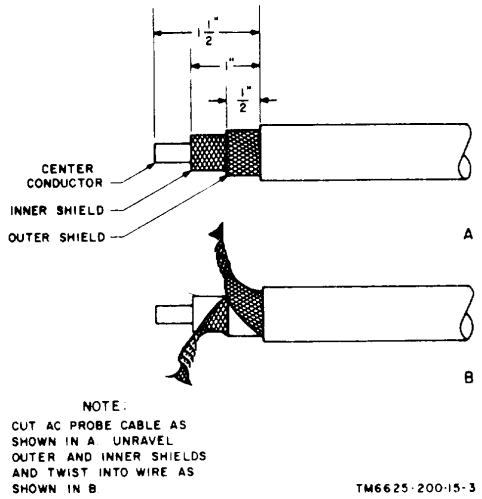

Figure 7-5. Preparation of AC probe cable.

330-µf capacitor to pin 1 of XRT-1. Connect the other end to the chassis ground connection between pins 7 and 8 of XRT-1; solder.

v. Using hookup wire, measure and cut as necessary the amount of wire necessary to go between the bottom of R24 and pin 1 of XRT-1. Route this wire close to the chassis as shown in figure 7-3. Strip off one-half inch of insulation from each end.

w. Using the wire that was prepared (v above), wrap one end around the terminal to which the bottom of R24 is connected and solder. Connect the other end to pin 1 of XRT-1, solder (there should be four wires connected to pin 1 of XRT-1).

x. Connect all remaining wires that were removed (r above) to the standoff insulator mounted on XRT-1; solder. There should be five wires connected to XRT-1.

y. Clip off the remaining wire of pin 5 of the RANGE switch.

z. Check the wiring to see that it is in accordance with figure 7-4.

Section III. ALIGNMENT

7-8. Alignment Procedures

a. Test Equipment. The test equipment required for alignment is given in paragraph 6-2.

b. Conditions for Alignment Tests. To prepare the multimeter for alignment, proceed as follows:

(1) Remove the rear access cover.

(2) Connect the power cable to the power source. Be sure that the ac voltage is the same as that used for normal operation of the multimeter.

(3) Rotate FUNCTION switch S1 to any position except OFF; the pilot lamp should illuminate.

(4) Allow the multimeter to warm up for at least 5 minutes before proceeding with the alignment.

Note. **All alignment controls are variable resistors with slotted shafts (fig. 6-6) that should be turned with a small screwdriver.**

7-9. DC Volts Alignment

Alignment of the 1V range is the only dc voltage alignment required. When the 1V range is aligned, all other ranges fall within permissible tolerances. To align the DC function of the multimeter, proceed as follows:

a. Set the FUNCTION switch (SELECTOR switch on the ME-26A/U) to +.

b. Set the RANGE switch to 1V.

c. Connect the COMMON clip to the DC probe.

d. Adjust the ZERO ADJ control until meter M1 indicates zero.

e. Connect the COMMON clip to the COMMON connector on the meter tester and connect the DC probe to the 1-volt jack.

f. Rotate the shaft of DC-CAL control R32 (fig. 6-6 and 6-7) until meter M1 indicates exactly 1 volt.

g. Disconnect the COMMON clip and the DC probe from the meter tester.

7-10. Filament Voltage Adjustment, AC Signal Rectifier

To adjust the filament voltage of the ac signal rectifier, proceed as follows:

a. Set the FUNCTION switch (SELECTOR switch on Multimeter ME-26A/U) to AC.

b. Connect the AN/URM-105 across the inner shield of the AC probe (gray wire) and the chassis ground.

c. Adjust V-1 FIL control R50 (fig. 6-6 and 6-7 until the AN/URM-105 indicates 5 volts ac.

d. Disconnect the AN/URM-105 from the multimeter.

7-11. AC Volts Alignment

To align the Ac function of the multimeter, proceed as follow:

a. Set the FUNCTION switch (SELECTOR switch on Multimeter ME-16A/U) to Ac.

b. Set the RANGE switch to 1V.

c. Connect the ground clip to the tip of the AC probe.

d. Adjust the AC ZERO control until meter M1 indicates zero.

e. Disconnect the ground clip from the tip of the AC probe and connect it to the COMMON connector on the meter tester.

f. Align each ac voltage range in sequence as follows:

(1) Set the RANGE switch to the position indicated in *Column 1* of the chart below.

(2) Connect the tip of the AC probe to the ac jack on the meter tester that is applicable to the ac voltage listed in *Column 2*.

(3) Set the meter tester output to the ac voltage value listed in *Column 2.*

(4) Adjust the alignment control (fig. 6-6 and 6-7) listed in *Column 3* until meter M1 of the multimeter indicate the voltage of the meter tester *(Column 2).*

Column 1 *Range switch*	*Column 2* *Meter tester output (volts ac)*	*Column 3* *Calibration control*
1V	3	1V-AC R35
3V	3	3V-AC R39
10V	10	10V-AC R40
30V	30	30v-AC R36
100V	100	100V-AC R37
300V	300	300V-AC R38

g. Disconnect the Ac probe from the meter tester.

7-12. Low-Voltage Supply Adjustment

To adjust the output of the low-voltage supply, proceed as follows:

a. Set the FUNCTION switch (SELECTOR) switch on Multimeter ME-26A/U) to OHMS.

b. Set the RANGE switch to RX1 position.

c. Observing polarity, connect the AN/URM-105 across resistor R47 (fig. 6-9 and 6-11).

d. Adjust RX1 control R49 (fig. 6-6) until the AN/URM-105 indicates - 0.9 volt dc.

e. Disconnect the AN/URM-105 from resistor R47.

CHAPTER 8
GENERAL SUPPORT TESTING PROCEDURES

8-1. General

a. Testing procedures are prepared for use by Electronics Field Maintenance Shops and Electronics Service Organizations responsible for general support maintenance of electronic equipment to determine the acceptability of repaired equipment. These procedures set forth specific requirements that repaired equipment must meet before it is returned to the using organization. These procedures may also be used as a guide for testing equipment that has been repaired at direct support maintenance if the proper tools and test equipments are available.

b. Comply with the instructions preceding each chart before proceeding to the chart. Perform each step in sequence; do not vary the sequence. For each step, perform all the actions required in the Control settings columns; then perform each specific test procedure and verify it against its performance standard.

8-2. Test Equipment Required

All the test equipment required to perform the testing procedures given in this chapter are listed in the chart below, and are authorized under TA 11-17 and TA 11-100 (11-17).

Nomenclature	*Technical manual*
Test Set, Meter TS-682A/GSM-1.....	TM 11-6625-277-14
Resistor, Decade ZM-16/U.....	TM 11-5102.
Transformer, Power (Variable) CN-16A/U.	
Multimeter AN/USM-223.....	TM 11-6625-654-14

8-3. Modification Work Orders

The performance standards listed in the tests (para 8-5 through 8-9) assume that all modification work orders on this equipment have been performed. A listing of current modification work orders will be found in DA Pam 310-7.

8-4. Physical Tests and Inspections

a. Test Equipment. None required.

b. Test Connections and Conditions.

(1) No connections are necessary.

(2) Remove the cover from the multimeter.

c. Procedure.

Step No.	*Test equipment*	*Control settings*	*Equipment under test*	*Test procedure*	*Performance standard*
1.	N/A		Controls may be in any position.	*a. Inspect case and* chassis for damage, missing parts, and condition of paint. **Note. Touchup painting is recommended in place of refinishing whenever practicable. Screwheads, binding posts, receptacles, and other plated parts will not be painted or polished with abrasives.**	a. No damage evident or parts missing. External surfaces intended to be painted do not show metal. Panel lettering is legible.
				b. Inspect all controls and mechanical assemblies loose or missing screws, bolts, and nuts.	b. Screws, nuts, and bolts are tight; for none are missing.
				c. Inspect all connectors, sockets, receptacles, and fuseholders for looseness, damage, or missing parts.	c. No looseness or damage is evident.
2.	N/A.		Controls may be in any position.	*a.* Rotate all panel controls throughout their limits of Travel.	a. Controls rotate freely without binding or excessive looseness.
				b. Operate all switches.	b. Switches operate properly.

8-5. DC Zero Adjust Test and DC Balance Test, AC Zero Control Range Test and Ohms Infinity Test

a. Test Equipment. None required.

b. Test Connections and Conditions. Follow procedure as outlined in c below.

c. Procedure.

Step no.	Control settings Test equipment	Equipment under test	Test procedure	Performance standard
1	N/A.	FUNCTION (SELECTOR) switch: -. RANGE: switch IV.	a. Connect COMMON clip to tip of DC probe. Adjust ZERO ADJ control until meter M1 indicates zero.	a. None.
			b. Set RANGE switch to each higher position (in sequence) from 3V through 1000V. Note meter indication at each position.	b. Meter M1 indicates zero for each position of RANGE switch.
2	N/A.	FUNCTION (SELECTOR) switch: +. RANGE switch: 3V.	a. Connect COMMON clip to tip of AC probe. Rotate ZERO ADJ control to extreme right. Note and record meter deflector in percentage of full scale. Note. Reading of 0.4 volt on 1-volt (top) scale would be 40% of full-scale deflection.	a. None.
			b. Set FUNCTION (SELECTOR) switch to -. Rotate ZERO) ADJ control to extreme left. Note and record meter deflection in percentage of full scale.	b. Sum of two deflections noted in a and b must equal 100%.
3	N/A.	FUNCTION (SELECTOR) switch: AC. RANGE switch: 1V.	a. Connect COMMON clip to tip of AC probe.	a. None.
			b. Rotate AC ZERO control fully clockwise.	b. Meter Ml should read minimum of 0.5 volt on 1-volt scale.
4	N/A.	Same as step 3.	a. Rotate AC ZERO control counterclockwise until meter M1 indicates 0.	a. None.
			b. Rotate RANGE switch to other ac positions (3V-300V).	b. Variation from zero indication should be less than 1 percent (0.01

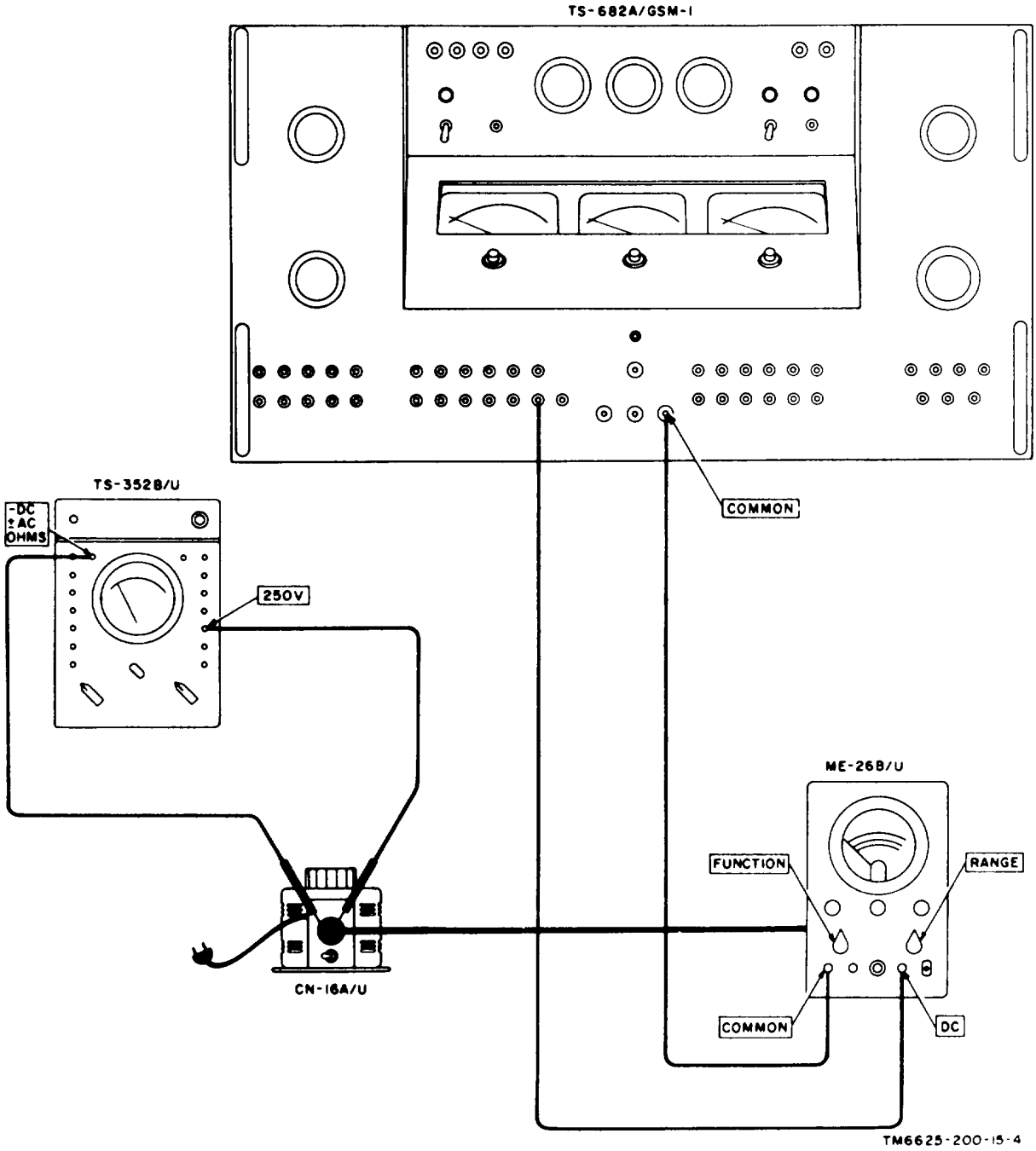

Figure 8-1. Multimeter response with line voltage variation test setup.

Step no.	Test equipment	Control settings Equipment under test	Test procedure	Performance standard
				volt) of full scale for each setting of RANGE' switch.
5	N/A.	FUNCTION (SELECTOR) switch: OHMS. RANGE switch: RX10.	a. Connect COMMON clip to OHMS probe. b. Adjust ZERO ADJ control so meter M1 indicates zero. c. Separate COMMON clip from OHMS probe, and adjust OHMS ADJ control so meter M1 indicates full scale (infinity). d. Set RANGE switch to RX1, and connect COMMON clip to OHMS probe.	a. None. b. None. c. None. d. Variation from zero indication should be less than 3 percent of full-scale deflection.
6	N/A.	Same as step 5, except: RANGE switch RX10.	a. Separate COMMON clip from OHMS probe. b. Rotate RANGE switch to Other OHMS positions (RX10 to RX1M).	a. Meter indication should be full scale. b. Meter indication for each position should be full scale.

8-6. Multimeter Response with Line Voltage Variation Test

a. Test Equipment.

(1) Test Set, Meter TS-682A/GSM-1.

(2) Transformer, Power (Variable) CN-16A,/U.

(3) Multimeter TS-352B/U.

b. Test Connections (kid Conditions. Connect the equipment as shown in figure 8-1.

c. Procedure.

Step no.	Test equipment	Control settings Equipment under test	Test procedure	Performance standard
1	N/A. +.	FUNCTION (SELECTOR) switch: RANGE switch: 1V.	a. Adjust CN-16A/U for 115-volt reading on TS-352B/U. b. Connect COMMON clip to tip of DC probe. Adjust ZERO ADJ control until meter M1 indicates zero. c. Adjust CN-16A/U for a 103.5-volt reading on TS-352B/U.	a. None. b. None. c. Change In meter M1 zero indication should be less than ± 0.04 volt of full scale.
2	TS-682A, GS-1: BATTERY switch: OFF. AC LINE switch: ON. Center selector switch: DC VOLTS AND MV.	Same as step 1.	a. Same as step 1a. b. Connect the equipment as shown in figure 8-1. c. Adjust TS 682A GSM-1 to deliver 1 volt to ME-26(*)/U. d. Vary CN-16A/U output so TS-352B/U is varying continuously between 103.5 and 126.5 volts. Observe meter M1 indication.	a. None. b. None. c. Meter M1 should indicate 1 volt d. Change in indication of meter M1 should be less than ± 3 percent (0.03 volt) of full scale.

8-7. Reverse Polarity Test and Meter Tracking Test

a. Test Equipment. Test Set, Meter TS-682A/GSM-1.
b. Test Connection and Conditions. Connect the equipment as shown in figure 8-2.
c. Procedure.

Step no.	*Control settings* *Test equipment*	*Equipment under test*	*Test procedure*	*Performance standard*
1	TS-682A/GSM-1: AC LINE switch: OFF. BATTERY switch: OFF. Output controls: maximum counterclockwise. Right-hand selector switch: AC AND DC. Center selector switch: DC VOLTS AND MA. Left-hand selector switch: .1 TO 500V.	FUNCTION (SELECTOR) switch: +. RANGE switch: 1V.	a. Connect equipment as shown in A, figure 8-2. b. Adjust voltage output controls on TS-682A/GSM-1 for a 1-volt indication on test set. Note meter M1 indication.	a. None. b. None.
2	Same as step 1.	FUNCTION (SELECTOR) switch: -. RANGE switch: 1V.	Leave controls in same position at end of step 1. Connect equipment as shown in B, figure 8-2. Note meter M1 indication.	Meter M1 indication should be within 1 1/2 percent of reading noted in step 1.
3	Same as step 1.	Same as step 1.	Same as step 1 except adjust TS-682A/GSM-1 controls for a 0.5-volt indication.	None.
4	Same as step 1.	Same as step 2.	Same as step 2, except leave controls in same position at end of step 3.	Same as step 2.
5	Same as step 1.	Same as step 1.	Same as step 1.	None.
6	Same as step 1.	Same as step 1.	Decrease TS-682A/GSM-1 output in steps of 0.1 volt, down o 0.1 volt; note meter M1 indication for each step.	Meter deflection at each step (1 volt to 0.1 volt) should track applied voltage within ± 1 percent (± 0.01 volt) of full scale.

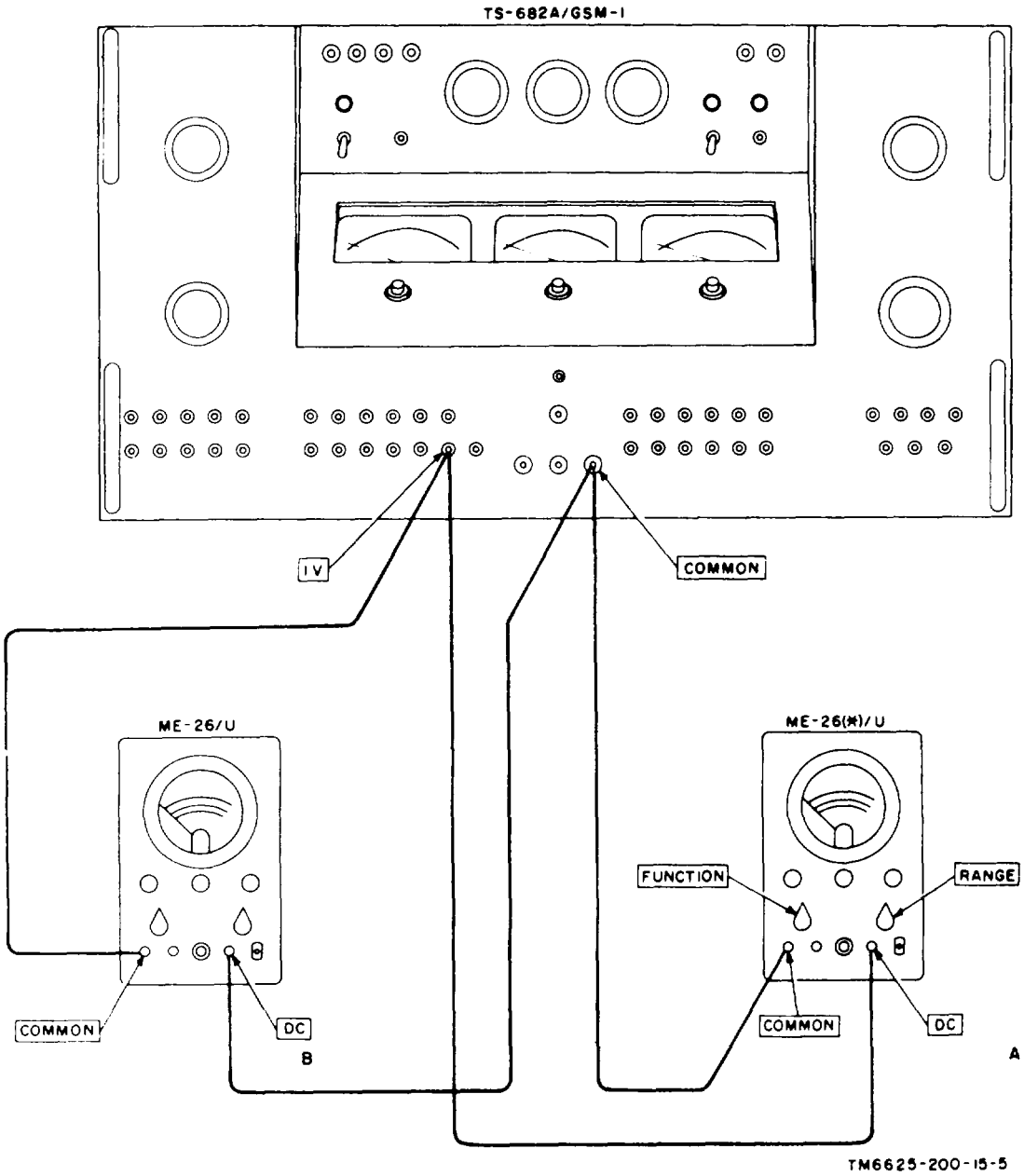

Figure 8-2. Reverse polarity and meter tracking test setup.

8-8. DC Calibration Test

a. Test Equipment. Test Set, Meter TS-682A/GSM-1.
b. Test Connections and Conditions. Connect the equipment as indicated in figure 8-3.
c. Procedure.

Step no.	*Control settings* *Test equipment*	*Equipment under test*	*Test procedure*	*Performance standard*
1.	TS-682A/GSM-1: AC LINE switch: OFF. BATTERY switch: OFF. Output controls: Maximum counterclockwise. Right-hand selector switch: AC AND DC. Center selector switch: DC VOLTS AND MA. Left-hand selector Switch: .1 to 500V.	FUNCTION (SELECTOR) Switch: +. RANGE switch: 1V.	a. Connect equipment as shown in figure 8-3, step 1. b. Operate TS-682A/GSM-1 AC LINE switch to ON. c. Adjust TS-682A/GSM-1 voltage output controls until multimeter indicates Full-scale deflection. d. Press TS-682A/GSM-1 BUZZER switch for approximately 2 seconds; note indication on center meter. e. Operate voltage output controls maximum counterclockwise.	a. None. b. None. c. None. d. TS-682A/GSM-1 indication should be 1 volt ±0.03 e. None.
2.	Same as step 1.	Same as step 1, except: RANGE switch:	a. Connect equipment as shown in figure 8-3, step 2. b. Repeat test procedures c, d, and e of step 1.	a. None. b. TS-682A/GSM-1 indication should be 3 ± 0.09 volts.
3	Same as step 1.	Same as step 1, RANGE switch: 10V.	a. Connect equipment as shown in figure 8-3, step 3. b. Repeat test procedures c, d, and e of step 1.	a. None. b. TS-682A/GSM-1 indication should be 10 ± 0.3
4	Same as step 1.	Same as step 1, except: RANGE switch: 30V.	a. Connect equipment as shown in figure 8-3, step 4. b. Repeat test procedures c, d, and e of step 1.	a. None. b. TS-682A/GSM-1 indication should be 30 ± 0.9 volts.
5	Same as step 1.	Same as step 1, except: RANGE switch: 100V.	a. Connect equipment as shown in figure 8-3, step 5. b. Repeat test procedures c, d, and e of step 1.	a. None. b. TS-682A/GSM-1 indication should be 100 ± 3 volts.
6	Same as step 1.	Same as step 1, except: RANGE switch: 300V.	a. Connect equipment as shown in figure 8-3, step 6. b. Repeat test procedures c, d, and e of step 1. ***Warning:*** **HIGH VOLTAGE: Turn TS-682A/GSM-1 voltage output controls fully counterclockwise before making any changes to connections.**	a. None. b. TS-682A/GSM-1 indication should be 300 ± 9 volts.
7	Same as step 1. except: Left-hand selector switch: 1000 VDC	Same as step 1, except: RANGE switch: 1000V.	a. Connect equipment as shown in figure 8-3, step 7. b. Repeat test procedures c, d, and e of step 1.	a. None. b. TS-682A/GSM-1 indication should be 1,000 ± 30 volts.

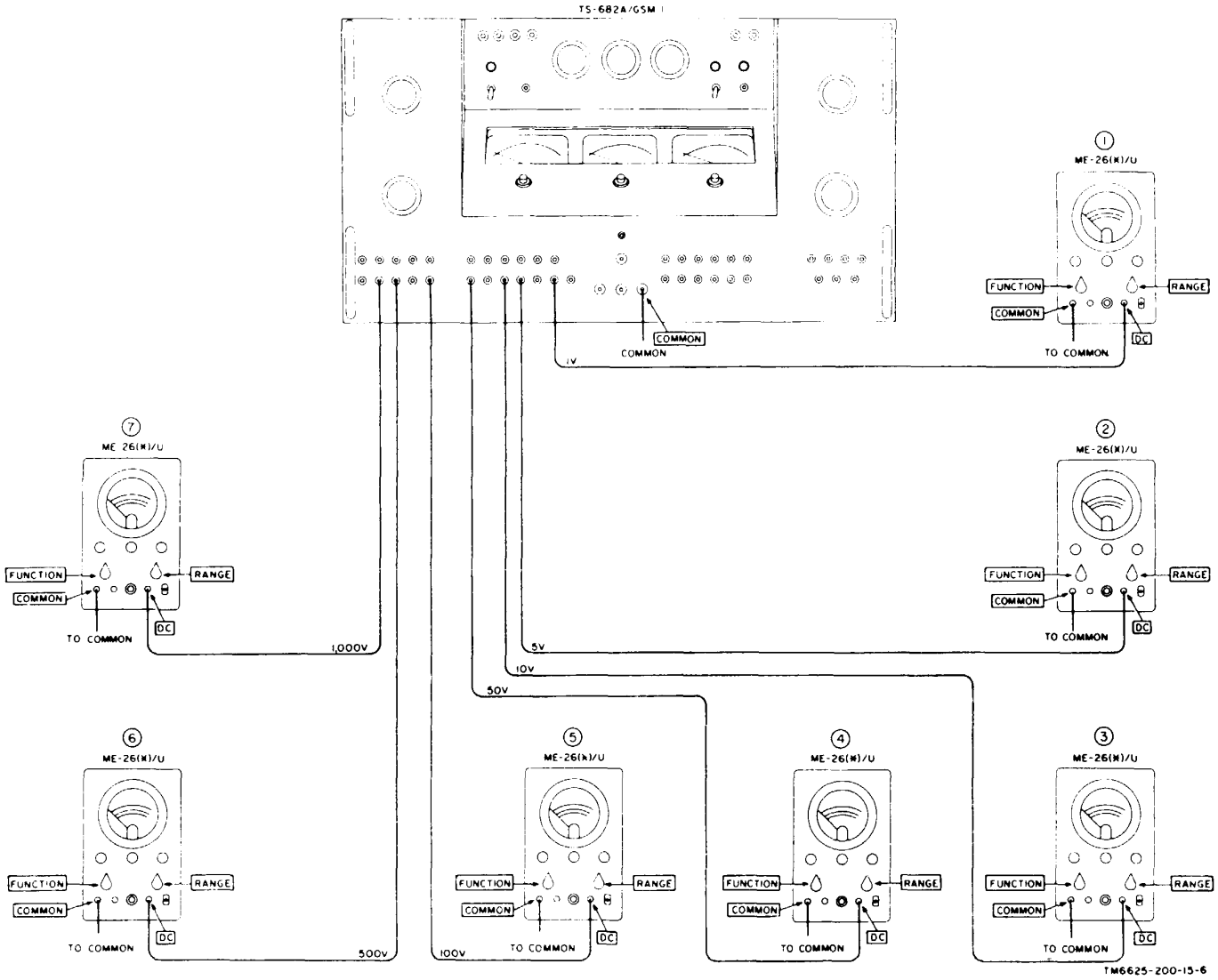

Figure 8-3. Dc calibration test setup.

8-9. Ohms Calibration Test

a. *Test Equipment.* Resistor, Decade ZM-16A/U.

b. *Test Connections and Conditions.* Connect the equipment as shown in figure 8-4.

c. *Procedure.*

Step no.	*Control settings* *Test equipment*	*Equipment under test*	*Test procedure*	*Performance standard*
1	ZM-16/U: X10 switch: 1. All other switches: 0.	FUNCTION (SELECTOR) switch: OHMS. RANGE switch: RX1.	Be sure OHMS function has been zeroed; connect equipment as shown in figure 8-4.	Meter M1 indicates 10 ± 1 ohms.
2	ZM-16/U: X100 switch: X1. All other switches: 0.	Same as step 1, except: RANGE switch: RX10.	Same as step 1.	Meter M1 indicates 100 ± 5 ohms.
3	ZM-16/U: X1000 switch: X1. All other switches: O.	Same as step 1, except: RANGE switch: RX100.	Same as step 1. ± 50 ohms.	Meter M1 indicates 1,000
4	ZM-16/U: X10000 switch: 1. All other switches: 0.	Same as step 1, except: RANGE switch: RX1K.	Same as step 1. ± 500 ohms	Meter M1 indicates 10,000
5	ZM-16/U: X100000 switch: 1: All other switches: 0.	Same as step 1, except: RANGE switch: RX10K.	Same as step 1. ± 5,000 ohms.	Meter M1 indicates 100,000
6	ZM-16/U: X1000000 switch: 1. All other switches: 0.	Same as step 1, except: RANGE switch: RX100K.	Same as step 1. ± 50,000 ohms.	Meter M1 indicates 1,000,000

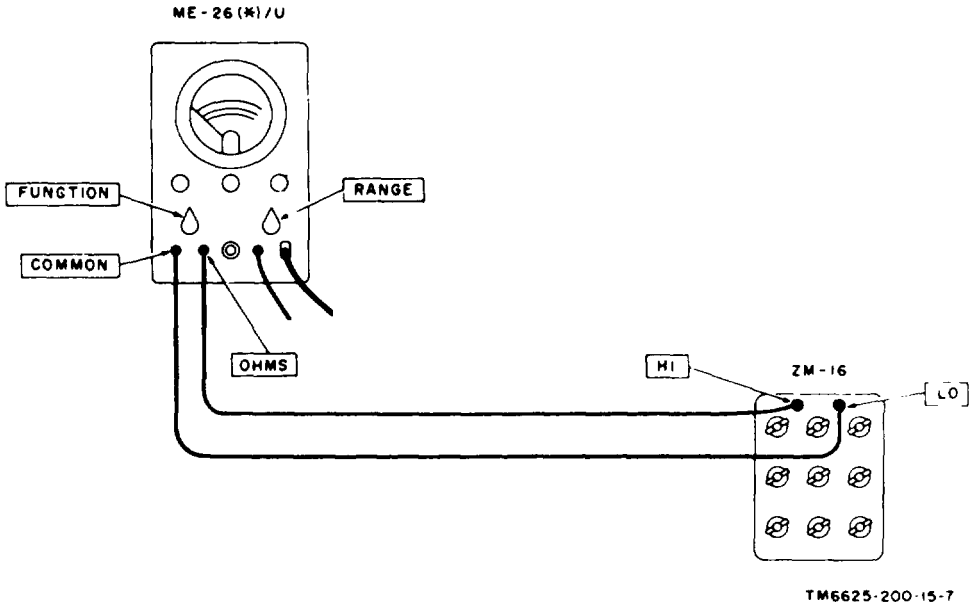

Figure 8-4. Ohms calibration test setup.

Step no.	Control settings: Test equipment	Control settings: Equipment under test	Test procedure	Performance standard
7	ZM-16/U: X10000000 switch: 1. All other switches: 0.	Same as step 1, except: RANGE switch: RX1M.	Same as step 1.	Meter M1 indicates 10,000,-000 ± 500,000 ohms.

CHAPTER 8.1
DEPOT OVERHAUL STANDARDS

8.1-1. Applicability of Depot Overhaul Standards

The tests outlined in this chapter are designed to measure the performance capability of a repaired equipment. Equipment that is to be returned to stock should meet the standards given in these tests.

8.1-2. Applicable References

a. Repair standards. Applicable procedures of the depots performing these tests, and the general standards for repaired electronic equipment given in TB SIG 355-1, TB SIG 355-2, AND TB SIG 355-3 form a part of the requirements for testing this equipment.

b. Modification Work Orders. Perform all modification work orders applicable to this equipment before making the tests specified. DA Pam 310-7 lists all available MWO's.

8.1-3. Test Facilities Required

The test equipment and material listed below are required for depot testing.

Nomenclature	*Federal stock No.*	*Technical manual*
Test Set, Meter TS 682A/U/GSM-1	6625-669-0747	TM 11-2535B
Resistor, Decade ZM 16/U	6625-669-0266	TM 11-5102
Transformer, Power (Variable) CN 16A/U		
Multimeter TS 352B/U	6625-553-0412	TM 11-6625-366-15
General Radio Model 1806 A Multimeter	6625-832-8956	
Signal Generator AN/USM 264	6625-935-4214	TM 11-6625-1842-12
Signal Generator AN/USM 44	6625-669-4031	TM 11-6625-508-10
Hewlett Packard Model 612A Signal Generator	6625-542-1249	

8.1-4. Depot Testing of Multimeter ME-26 (*)/U

To perform the depot overhaul testing of Multimeter ME-26(*)/U, perform the tests given in paragraphs 8-4 through 8-9 and 8.1-5.

8.1-5. Ac Frequency Response Test

To perform the ac frequency response test of Multimeter ME-26(*)/U, proceed as follows:

a. Connect the 50-ohm output of the AN/USM 264 to General Radio Model 1806 A as shown in A, figure 8.1-1.

b. Tune the AN/USM 264 to 20 cps, 60 cps, 1 ke, and 1 me. AT each frequency, adjust the output to 1 volt as read on model 1806 A: then, without further adjustment of the AN/USM 264 controls, connect the equipment as shown in B, figure 8.1-1. The output at each frequency should be between 0.97 and 1.03 volt.

c. Connect the output of the AN/USM 44 to General Radio Model 1806 A as shown in A, figure 8.1-1.

d. Tune the AN/USM 44 to 50 mc and 400 mc. At each frequency, adjust the AN/USM 44 to a 0.3-volt reading as read on model 1806 A: then, without further adjustment of the AN/USM 44, connect the equipment as shown in B, figure 8.1-1. The output at each frequency should be between 0.150 and 0.450 volt.

e. Connect the output of Hewlett-Packard Signal Generator Model 612A to General Radio Model 1806 A as shown in A, figure 8.1-1.

f. Tune Hewlett-Packard Model 612A to 700 mc. Adjust the output for 0.3-volt reading as indicated on General Radio Model 1806 A: then, without further adjustment to the controls of the signal generator, connect the equipment as shown in B, figure 8.1-1. The output voltage should read between 0.150 and 0.450 volt.

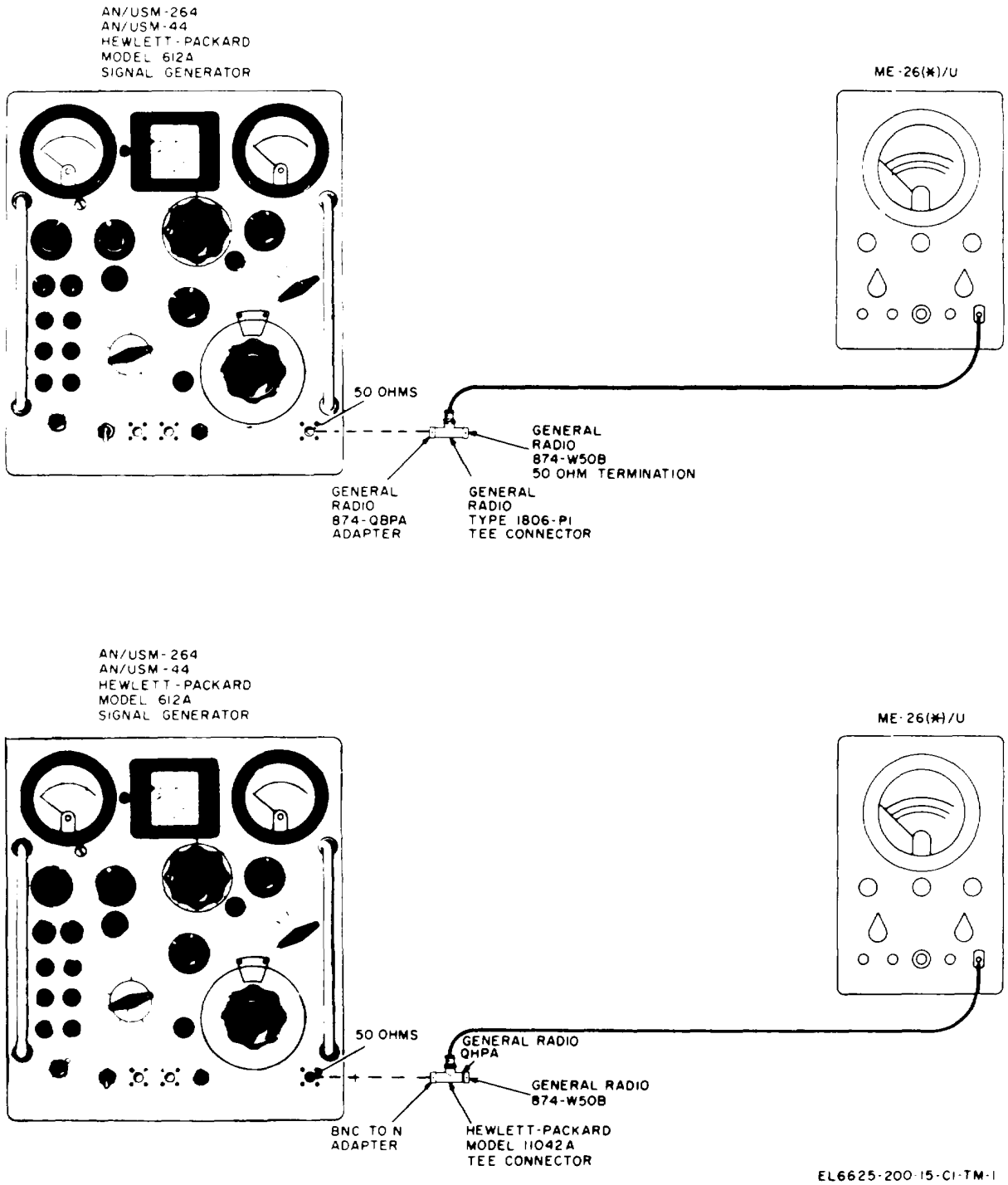

Figure 8.1-1. Frequency response test setup.

CHAPTER 9

SHIPMENT, LIMITED STORAGE, AND DEMOLITION TO PREVENT ENEMY USE

Section I. SHIPMENT AND LIMITED STORAGE

9-1. Disassembly of Equipment

a. Remove the power, cable from the power source.

b. Remove the rear cover; coil the power cable and place it in the storage compartment; replace the rear cover.

c. Coil the test leads and secure them with tape, string, or rubberbands.

9-2. Repackaging for Shipment or Limited Storage

The exact procedure for repackaging depends on the material available and the conditions under which the equipment is to be shipped or' stored. Adapt the procedure given below when-ever circumstances permit. The information concerning the original packaging (para 2-1) will also be helpful.

a. Material Requirements. The materials given below are required for packaging multimeter ME-26 B/U. For stock numbers of materials, consult SB 38-100.

Material	*Quantity*
Waterproof paper	9 sq ft.
Waterproof tape	20 ft.
Cotton twine	20 ft.'
Corrugated cardboard	20 sq ft.
Gummed tape	20 ft.
Filler material	5 lb.

b. Packaging.

(1) Cushion the multimeter with pads of filler material on all sides. Place the cushioned unit within a wrap of corrugated cardboard and secure the ends with gummed tape.

(2) Package each spare tube, spare lamp, and spare fuse in a wrap of corrugated cardboard; secure the ends of the packages with gummed tape. Consolidate al the spare parts within a single wrap of corrugated cardboard; secure the ends of the package with gummed tape.

(3) Package the technical manuals within a close-fitting bag fabricated of waterproof paper. Seal the bag with waterproof tape.

(4) Use corrugated cardboard and form a carton large enough to hold the packaged multimeter, the spare parts, and the technical manuals. Line the carton with waterproof paper. Place the packages in the carton and fill all voids with filler material. Seal the waterproof carton liner with waterproof tape; seal the carton with gummed tape.

Section II. DEMOLITION OF MATERIEL TO PREVENT ENEMY USE

9-3. Authority for Demolition

The demolition procedures given in paragraph 9-4 will be used to prevent the enemy from using or salvaging this equipment. Demolition of the equipment will be accomplished only upon the order of the commander.

9-4. Methods of Destruction

a. The size and construction of the multimeter particularly lends itself to destruction by smashing. If time permits, remove the chassis from the case before smashing.

b. Cut the power cable and test leads.

c. Burn the technical manuals.

d. Bury or scatter the destroyed parts in slit trenches, foxholes, or throw them into streams.

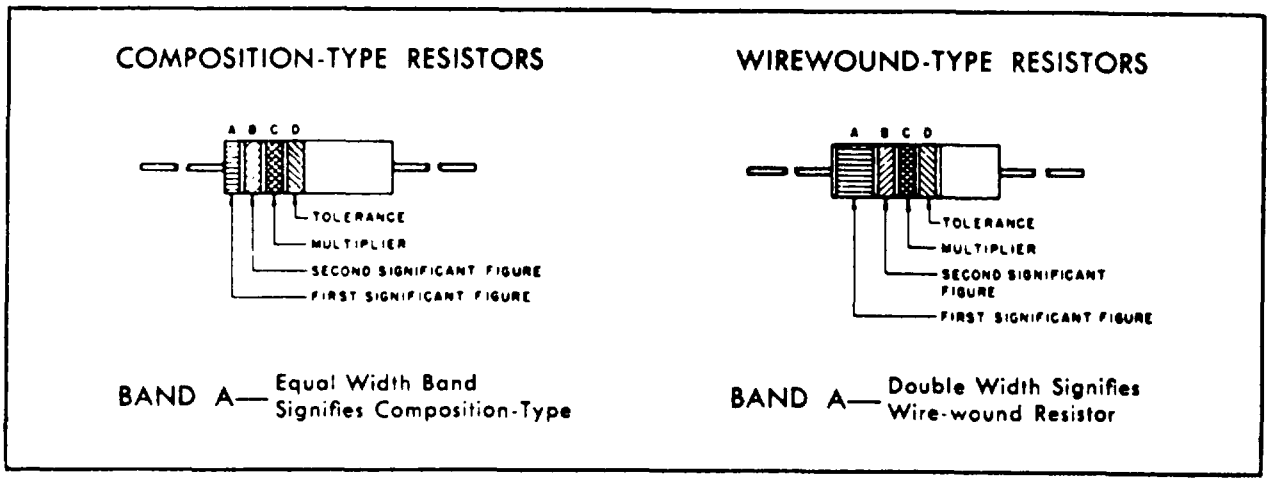

COLOR CODE TABLE

BAND A		BAND B		BAND C		BAND D*	
COLOR	FIRST SIGNIFICANT FIGURE	COLOR	SECOND SIGNIFICANT FIGURE	COLOR	MULTIPLIER	COLOR	RESISTANCE TOLERANCE (PERCENT)
BLACK	0	BLACK	0	BLACK	1		
BROWN	1	BROWN	1	BROWN	10		
RED	2	RED	2	RED	100		
ORANGE	3	ORANGE	3	ORANGE	1,000		
YELLOW	4	YELLOW	4	YELLOW	10,000	SILVER	± 10
GREEN	5	GREEN	5	GREEN	100,000	GOLD	± 5
BLUE	6	BLUE	6	BLUE	1,000,000		
PURPLE (VIOLET)	7	PURPLE (VIOLET)	7				
GRAY	8	GRAY	8	SILVER	0.01		
WHITE	9	WHITE	9	GOLD	0.1		

EXAMPLES OF COLOR CODING

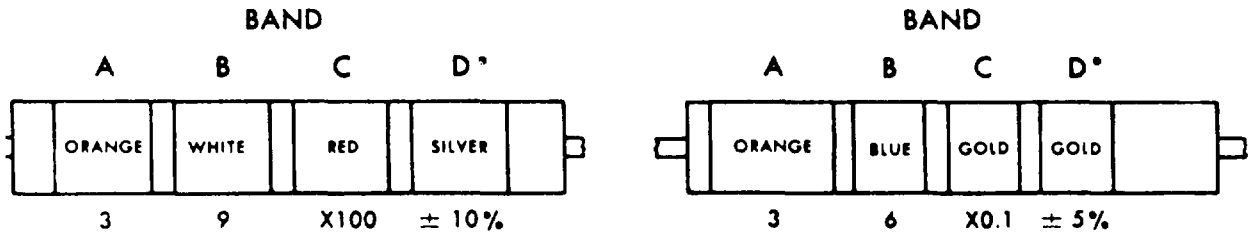

NOMINAL RESISTANCE	3,900 Ohms	3.6 Ohms
RESISTANCE TOLERANCE	± 10 percent	± 5 percent

STD-R2

*If Band D is omitted, the resistor tolerance is ± 20%, and the resistor is not Mil-Std.

Figure 9-1. MIL-STD resistor color-code markings.

APPENDIX A
REFERENCES

Following is a list of publications available to maintenance personnel for Multimeters ME-26(*)/U:

DA Pam 310-4	Index of Technical Manuals, Technical Bulletins, Supply Manuals (Types 7, 8, and 9), Supply Bulletins, and Lubrication Orders.
DA Pam 310-7	US Army Equipment Index of Modification Work Orders.
SB 11-573	Painting and Preservation Supplies Available for Field Use for Electronics Command Equipment.
SB 38-100	Preservation, Packaging, Packing and Marking Materials, Supplies, and Equipment Used by the Army.
TB 43-0118	Field Instructions for Painting and Preserving Electronics Command Equipment Including Camouflage Pattern Painting of Electrical Equipment Shelters.
TB 43-0122	Instructions for Safe Handling and Identification of US Army Electronics Command Managed Radioactive Items in the Army Supply System.
TM 11-5102	Resistors, Decade ZM-16/U, ZM-16A/U, and ZM-16B/U.
TM 11-6625-274-12	Operator's and Organizational Maintenance Manual: Test Sets, Electron Tube TV-7/U, TV-7A/U, TV-7B/U, and TV-7D/U.
TM 11-6625-277-14	Operator's, Organizational, Direct Support, and General Support Maintenance Manual: Meter Test Sets TS-682/GSM-1 and TS-682A/GSM-1 (NSN 6625-00-669-0747).
TM 11-6625-316-12	Operator's and Organizational Maintenance Manual: Test Sets, Electron Tube TV-2/U, TV-2A/U, TV-2B/U, and TV-2C/U.
TM 11-6625-654-14	Operator's, Organizational, Direct Support, and General Support Maintenance Manual Including Repair Parts and Special Tools Lists (Including Depot Maintenance Repair Parts and Special Tools) for Multimeter AN/USM-223.
TM 38-750	The Army Maintenance Management System (TAMMS).

APPENDIX C
MAINTENANCE ALLOCATION
Section I. INTRODUCTION

C-1. General

This appendix provides a summary of the maintenance operations for it authorizes categories of maintenance for specific maintenance functions on repairable items and components and the tools and equipment required to perform each function. This appendix may be used as an aid in planning maintenance operations.

C-2. Maintenance Function

Maintenance functions will be limited to and defined as follows:

a. Inspect. To determine the serviceability of an item by comparing its physical, mechanical, and/or electrical characteristics with established standards through examination.

b. Test. To verify serviceability and to detect incipient failure by measuring the mechanical or electrical characteristics of an item and comparing those characteristics with prescribed standards.

c. Service. Operations required periodically to keep an item in proper operating condition, i.e., to clean (decontaminate), to preserve, to drain, to paint, or to replenish fuel, lubricants, hydraulic fluids, or compressed air supplies.

d. Adjust. To maintain, within prescribed limits, by bringing into proper or exact position, or by setting the operating characteristics to the specified parameters.

e. Align. To adjust specified variable elements of an item to bring about optimum or desired performance.

f. Calibrate. To determine and cause corrections to be made or to be adjusted on instruments or test measuring and diagnostic equipments used in precision measurement. Consists of comparisons of two instruments, one of which is a certified standard of known accuracy, to detect and adjust any discrepancy in the accuracy of the instrument being compared.

g. Install. The act of emplacing, seating, or fixing into position an item, part, module (component or assembly) in a manner to allow the proper functioning of the equipment or system.

h. Replace. The act of substituting a serviceable like type part, subassembly, or module (component or assembly) for an unserviceable counterpart.

i. Repair. The application of maintenance services (inspect, test, service, adjust, align, calibrate, replace) or other maintenance actions (welding, grinding, riveting, straightening, facing, remachining, or resurfacing) to restore serviceability to an item by correcting specific damage, fault, malfunction, or failure in a part, subassembly, module (component or assembly), end item, or system.

j. Overhaul. That maintenance effort (service/action) necessary to restore an item to a completely serviceable/operational condition as prescribed by maintenance standards (i.e., DMWR) in appropriate technical publications. Overhaul is normally the highest degree of maintenance performed by the Army. Overhaul does not normally return an item to like new condition.

k. Rebuild. Consists of those services/actions) necessary for the restoration of unserviceable equipment to a like new condition in accordance with original manufacturing standards. Rebuild is the highest degree of materiel maintenance applied to Army equipment. The rebuild operation includes the act of returning to zero those age measurements (hours, miles, etc.) considered in classifying Army equipments/components.

C-3. Column Entries

a. Column 1, Group Number. Column 1 lists group numbers, the purpose of which is to identify components, assemblies, subassemblies, and modules with the next higher assembly.

b. Column 2, Component/Assembly. Column 2 contains the noun names of components, assemblies, subassemblies, and modules for which maintenance is authorized.

c. Column 3, Maintenance Functions. Column 3 lists the functions to be performed on the item listed in column 2. When items are listed without maintenance functions, it is solely for purpose of having the group numbers in the MAC and RPSTL, coincide.

d. Column 4, Maintenance Category. Column 4 specifies, by the listing of a "worktime" figure in the appropriate subcolumn(s), the lowest level of maintenance authorized to perform the function listed in column 3. This figure represents the active time required to perform that maintenance function at the indicated category of maintenance. If the number or complexity of the tasks within the listed maintenance function vary at different maintenance categories, appropriate "worktime" figures will be shown for each category. The number of task-hours specified by the "' worktime"" figure represents the average time required to restore an item (assembly, subassembly, component, module, end item or system) to a serviceable condition under typical field operating conditions. This time, includes preparation time, troubleshooting time, and quality assurance/quality control time in addition to the time required to perform the specific tasks identified for the maintenance functions authorized in the maintenance allocation chart. Subcolumns of column 4 are as follows:

C-Operator/Crew
O-Organizational
F-Direct Support
H-General Support
D-Depot

e. Column 5, Tools and Equipment. Column 5 specifies by code, those common tool sets (not individual tools) and special tools, test, and support equipment required to perform the designated function.

f. Column 6, Remarks. Column 6 contains an alphabetic code which leads to the remark in section IV, Remarks, which is pertinent to the item opposite the particular code.

C-4. Tool and Test Equipment Requirements (Sec III)

a. Tool or Test Equipment Reference Code. The numbers in this column coincide with the numbers used in the tools and equipment column of the MAC. The numbers indicate the applicable tool or test equipment for the maintenance functions.

b. Maintenance Category. The codes in this column indicate the maintenance category allocated the tool or test equipment.

c. Nomenclature. This column lists the noun name and nomenclature of the tools and test equipment required to perform the maintenance functions.

d. National/NATO Stock Number. This column lists the National/NATO stock number of the specific tool or test equipment.

e. Tool Number. This column lists the manufacturer's part number of the tool followed by the Federal Supply Code for manufacturers (S,-digit) in parentheses.

C-5. Remarks (Sec IV)

a. Reference Code. This code refers to the appropriate item in section II, column 6.

b. Remarks. This column provides the required explanatory information necessary to clarify items appearing in section II.

(Next printed page is C-3)

Section II. MAINTENANCE ALLOCATION CHART FOR MULTIMETERS ME-26A/U, ME-26B/U, ME/26C/U, AND ME-26D/U

(1) Group number	(2) Component/assembly	(3) Maint. function	(4) Maint. category C	O	F	H	D	(5) Tool/ equipment	(6) Remarks
00	Multimeters ME-26A/U, ME-26B/U, ME/26C/U, AND ME-26D/U.	INSPECT		0.5				10	
		REPAIR		0.5				10	A
		TEST				1.0		1-9	
		ALIGN				2.0		1-9	
		REPAIR				2.0		1-9	
		OVERHAUL					4.0	1-9	

SECTION III TOOL AND TEST EQUIPMENT REQUIREMENTS FOR MULTIMETERS ME-26A/U, ME-26B/U, ME-26C/U, AND ME-26D/U'

TOOL OR TEST EQUIPMENT REF CODE	MAINTENANCE CATEGORY	NOMENCLATURE	NATIONAL/NATO STOCK NUMBER	TOOL NUMBER
1	H	METER TEST SET TS-682/GSM-1	6625-00-669-0747	
2	H	MULTIMETER AN/USM-223	6625-00-999-7465	
3	H	RESISTOR, DECADE ZM-16	6625-00-669-0266	
4	D	TEST SET, ELECTRON TUBE TV-2C/U	6625-00-669-0263	
5	H	TEST SET, ELECTRON TUBE TV-7D/U	6625-00-581-2036	
6	D	R.F. VOLTMETER ME-303A/U	6625-00-421-7382	
7	D	SIGNAL GENERATOR SO-1112(V)a/U	6625-00-566-3067	
8	D	SIGNAL GENERATOR SG-340A/G	6625-00-542-1292	
9	H	TOOL KIT, ELECTRONIC EQUIPMENT TK-105/G	5810-00-610-8177	
10	O	TOOL EQUIPMENT NORMALLY FURNISHED ORGANIZATIONAL MAINTENANCE PERSONNEL BY VIRTUE OF ASSIGNED MISSION.		

(Edition of 1 Oct 74 may be used until exhausted)

SECTION IV. REMARKS

Reference Code	Remarks
A	REPAIR BY ORGANIZATION IS LIMITED TO REPLACEMENT OF KNOBS, LAMPS AND FUSES.

INDEX

	Paragraph	Page
Ac voltage measurement analysis	5-7	5-8
Ac voltage measurements	5-3	5-1
Ac volts alignment	7-11	7-8
Alignment procedures	7-8	7-7
Amplifier and cathode follower circuit	5-5	5-4
Authority, demolition	9-3	9-1
Block diagram functioning	5-1	5-1
Checking:		
B1 circuits for shorts	6-3	6-14
Unpacked equipment	2-2	2-1
Cleaning	4-4	4-2
Cleaning and touchup painting instructions	4-7	4-3
Daily preventive maintenance checks and services chart	4-4	4-2
Direct current:		
Calibration test	8-8	8-7
Resistance, transformer windings	6-7	6-18
Voltage measurement analysis	5-6	5-8
Voltage measurements	5-2	5-1
Volts alignment	7-9	7-7
Zero adjustment test, dc balance test, ac zero control range, and ohms infinity test	8-5	8-2
Demolition, authority	9-3	9-1
Description	1-6	1-2
Disassembly and reassembly:		
Ac probe, Multimeter ME-26A/U	7-3	7-2
Ac probe, changed Multimeters ME-26B/U, ME-26C/U, and ME-26D/U	7-2	7-1
Disassembly, equipment	9-1	9-1
External differences, models	1-7	1-2
Filament voltage adjustment, ac signal rectifier	7-6	7-4
Forms and records	1-3	1-1
Fuse, replacement	4-9	4-4
General parts replacement techniques	7-1	7-1
Index, publications	1-2	1-1
Installation:		
Multimeter ME-26A/U	2-4	2-3
Multimeters ME-26B/U, ME-26C/U, and ME-26D/U	2-3	2-1
Internal differences, models	5-10	5-12
Isolating trouble within a stage	6-6	6-18
Low-voltage supply adjustment	7-12	7-8
Measurement:		
Ac voltage	3-5	3-6
Dc voltage	3-4	3-6
Measurement-Continued		
Resistance-	3-9	3-8
Methods, destruction	9-4	9-1
Modification work orders	8-3	8-1
Monthly maintenance	4-3	4-1
Monthly preventative maintenance .checks and services chart	4-6	4-2
Multimeter response with line voltage variation test	8-6	8-4
Ohms calibration test	8-9	8-9
Operating controls and indications	3-2	3-1
Operator's daily preventative maintenance checks and	4-4	4-2
Painting instructions	4-9	4-4
Physical tests and Inspection	8-4	8-1
Power supply	5-9	5-12
Preliminary data, pulse measurements	3-6	3-7
Preventive maintenance	4-2	4-1
Publications, index,	1-2	1-1
Pulse measurements	3-7	3-7
Purpose and use	1-4	1-1
Repackaging, shipment or limited storage	9-2	9-1
Replacement:		
Fuse	4-9	4-4
Pilot lamp	4-8	4-3
Rectifier tube or voltage regulator tube on Multimeter ME-26A/U	4-11	4-5
Rectifier tube or voltage regulator tube on Multimeters ME-26B/C, ME-26C/U, and ME-26D/U	4-10	4-4
Resistance:		
Measurement analysis	5-1	5-10
Measurements	5-4	5-4
Reverse polarity test and meter tracking test	8-7	8-5
Scope:		
Manual	-1-1	1-1
Operator's maintenance	4-1	4-1
Organizational maintenance	4-1	4-1
Starting procedure	3-3	3-5
Stopping procedure	3-10	3-8
Technical characteristics	1-5	1-2
Test equipment required	8-2	8-1
Tools and test equipment required	6-2	6-1
Troubleshooting chart	6-4	6-14
Troubleshooting procedures	-6-2	6-1
Tube-testing techniques	6-5	6-17
Turnover effect	3-8	3-7
Unpacking	2-1	2-1

By Order of the Secretary of the Army:

HAROLD K. JOHNSON,
General, United States Army,
Chief of Staff.

Official:
KENNETH G. WICKHAM,
Major General, United State Army,
The Adjutant General

Distribution:
Active Army:
USASA (2)
CNGB (1)
ACSC-E (2)
Dir/Trans (1)
CofEngrs (1)
TSG (1)
CofSptS (1)
Bd (5)
USACDC Agey (1)
USAMC (5)
USCONARC (5)
ARADCOM (6)
ARADCOM Rgn (2)
OS MaJ Com(i (4)
LOGCOMD (2)
USAMICOM (4)
USASTRATCOM (4)
USASTRATCOM-EUR (5)
USASTRATCOM-SO (6)
USARYIS (5)
USARHAW (5)
USAESC (70)
MDW (1)
Armies (2) except
First USA (5)
Seventh USA (5)
Eighth USA (5)
Corps (2)
USAC (3)
Svc Colleges (2)
Br Svc Schools (3)
USATC Armor (2)
USATC Inf (2)
USASTC (2)
WRAMC (1)
Army Pic Cen (2)
USACDCEC (10)
USAATC (5)
USATTC (5)
ARADMAC (5)
USATCFE (5)
USAJFKCENSPWAR (5)
Instl (2) except
Fort Gordlon (10)
Fort Huachuca (10)
Fort Carson (25)
Fort Knox (12)
Fort Belvoir (5)
WSMR (5)
JCA, Ft Ritchie (5)
Army Dep (5) except
LBAD (14)
SAAD (30)
TOAD (14)
ATAD (10)
PG (6)
Gen Deps (2)
Sig Sec Gen Deps (5)
Sig Dep (12)
Sig FLDMS (2)
AMS (1)
USAERDAA (2)
USAERDAW (13)
USACRREL (2)
NLABS (5)
USABIOLABS (6'
USAEHA (5)
MAAG (2)
USARMIS (2)
USARMA (2)
LGH (5)
Redstone Arsenal (5)
Edgewood Arsenal (5)
Units org under fol TOE:
(2 copies each)

	1-55	6-185
1-56	6-186	
1-76	6-200	
1-76	6-201	
1-100	6-216	
1-101	6-300	
1-128	6-345	
1-155	6-346	
1-156	6-355	
1-207	6-365	
1-307	6-385	
6-100	6-386	
6-115	6-425	
6-116	6-426	
6-155	6-435	
6-156	6-436	
6-165	6-455	
6-166	6-456	
	6-175	6-565

6-575	11-225	29-55	44-8
6-576	11-226	29-56	44-12
6-577	11-247	29-57	44-236
6-615	11-327	29-75	44-535
6-616	11-347	29-79	44-536
6-700	11-357	29-85	44-537
6-701	11-377	29-86	44-545
7	11-500 (AA-AC,	29-87	44-546
7-100	EL, RB, RE,	29-102	44-547
7-157	RN-RX)	29-105	44-548
9-247	11-587	29 109	44-568
11-5	11-592	29-134	55-89
11-6	11-597	29-138	55-99
11-35	17	29-139	55-157
11-38	17-100	29-205	55-405
11-56	21-105	29-206	55-406
11-57	29-1	29-207	55-407
11-97	29-11	29-245	55-457
11-98	29-15	29-247	55-458
11-117	29-16	29-402	55-500
11-127	29-17	29-500 (FA)	55-510
11-137	29-21	32-57	57
11-155	29-25	32-500	57-100
11-156	29-35	33-500 (KD))	57-102
11-157	29-36	37	67
11-158	29-37	37-100	77-100
11-215	29-41	39-401	77-102
11-216	29-51	44-2	

NG: State AG (3); units-same as active Army except allowance is one (1) copy per unit.
USAR: None.

For explanation of abbreviations used, see AR 320-50.

*U.S. GOVERNMENT PRINTING OFFICE: 1987 181 421/70704

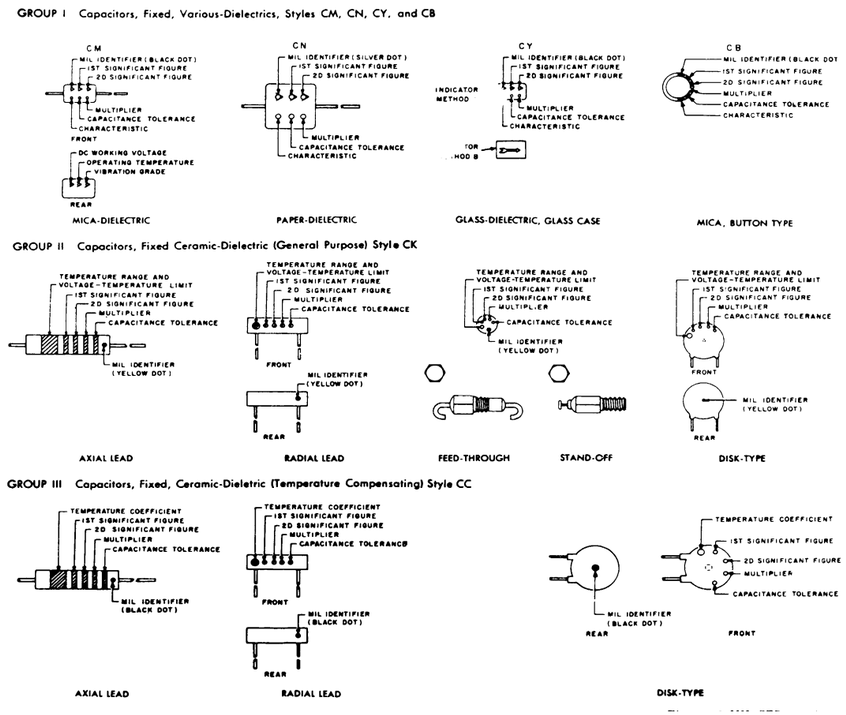

COLOR CODE TABLES

TABLE I – For use with Group I, Styles CM, CN, CY and CB

COLOR	MIL ID	1st SIG FIG	2nd SIG FIG	MULTIPLIER[1]	CAPACITANCE TOLERANCE CM	CN	CY	CB	CHARACTERISTIC[2] CM	CN	CY	CB	DC WORKING VOLTAGE CM	OPERATING TEMP RANGE CM	VIBRATION GRADE CM
BLACK	CM, CY CB	0	0	1			± 20%	± 20%		A				-55° to +70°C	10–55 cps
BROWN		1	1	10					B	E		B			
RED		2	2	100	± 2%		± 2%	± 2%	C		C			-55° to +85°C	
ORANGE		3	3	1,000		± 30%			D			D	300		
YELLOW		4	4	10,000					E					-55° to +125°C	10–2,000 cps
GREEN		5	5		± 5%				F				500		
BLUE		6	6											-55° to +150°C	
PURPLE (VIOLET)		7	7												
GREY		8	8												
WHITE		9	9												
GOLD				0.1			± 5%	± 5%							
SILVER	CN				± 10%	10%	± 10%	± 10%							

TABLE II – For use with Group II, General Purpose, Style CK

COLOR	TEMP. RANGE AND VOLTAGE – TEMP LIMITS[3]	1st SIG FIG	2nd SIG FIG	MULTIPLIER[1]	CAPACITANCE TOLERANCE	MIL ID
BLACK		0	0	1	± 20%	
BROWN	AW	1	1	10	± 10%	
RED	AX	2	2	100		
ORANGE	BX	3	3	1,000		
YELLOW	AV	4	4	10,000		CK
GREEN	CZ	5	5			
BLUE	BV	6	6			
PURPLE (VIOLET)		7	7			
GREY		8	8			
WHITE		9	9			
GOLD						
SILVER						

TABLE III – For use with Group III, Temperature Compensating, Style CC

COLOR	TEMPERATURE COEFFICIENT[4]	1st SIG FIG	2nd SIG FIG	MULTIPLIER[1]	CAPACITANCE TOLERANCE Capacitances over 10uuf	Capacitances 10uuf or less	MIL ID
BLACK	0	0	0	1		± 2.0uuf	CC
BROWN	-30	1	1	10	± 1%		
RED	-80	2	2	100	± 2%	± 0.25uuf	
ORANGE	-150	3	3	1,000			
YELLOW	-220	4	4				
GREEN	-330	5	5		± 5%	± 0.5uuf	
BLUE	-470	6	6				
PURPLE (VIOLET)	-750	7	7				
GREY		8	8	0.01			
WHITE		9	9	0.1	± 10%		
GOLD	+100					± 1.0uuf	
SILVER							

1. The multiplier is the number by which the two significant (dG) figures are multiplied to obtain the capacitance in uuf.
2. Letters indicate the Characteristics designated in applicable specifications: MIL-C-5, MIL-C-91, MIL-C-11272, and MIL-C-10950 respectively.
3. Letters indicate the temperature range and voltage-tempeture limits designated in MIL-C-11015.
4. Temperature coefficient in parts per million per degree celgrade.

Figure 9-2. MIL-STD capacitor color-code markings.

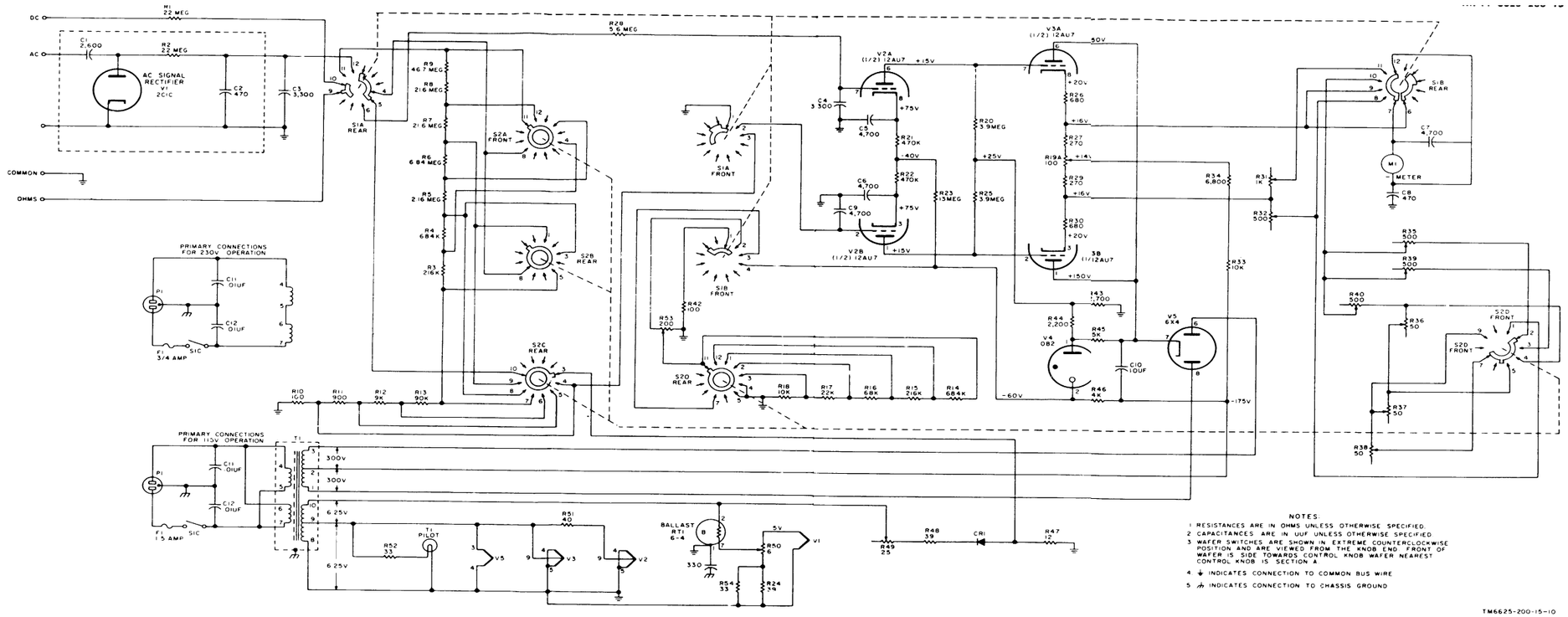

Figure 9-3. Change Multimeter ME-26B/U, ME-26C/U, and Multimeter ME-26D/U, schematic diagram.

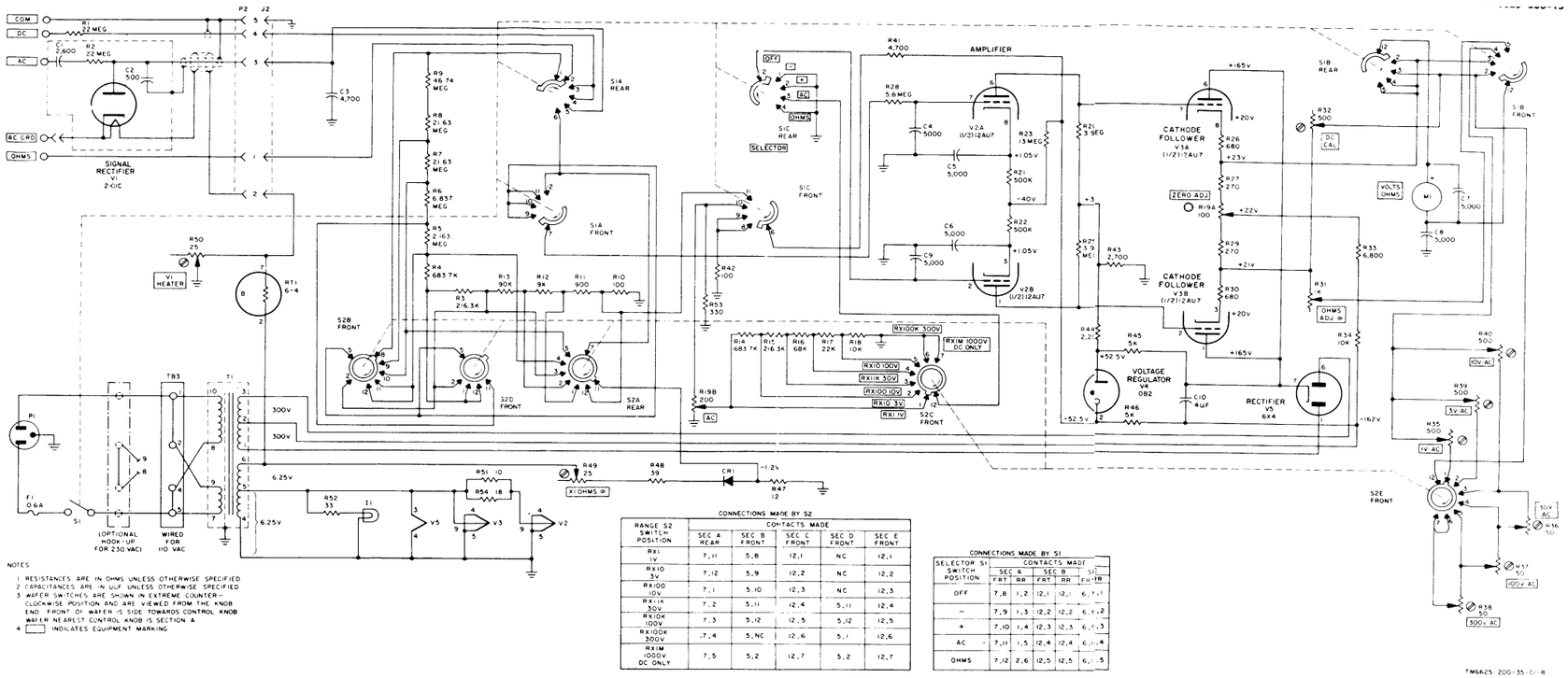

CONNECTIONS MADE BY S2

RANGE S2 SWITCH POSITION	CONTACTS MADE				
	SEC A REAR	SEC B FRONT	SEC C FRONT	SEC D FRONT	SEC E FRONT
RX1 1V	7,11	5,8	12,1	NC	12,1
RX10 3V	7,12	5,9	12,2	NC	12,2
RX100 10V	7,1	5,10	12,3	NC	12,3
RX1K 30V	7,2	5,11	12,4	5,11	12,4
RX10K 100V	7,3	5,12	12,5	5,12	12,5
RX100K 300V	7,4	5,NC	12,6	5,1	12,6
RX1M 1000V DC ONLY	7,5	5,2	12,7	5,2	12,7

CONNECTIONS MADE BY S1

SELECTOR S1 SWITCH POSITION	CONTACTS MADE					
	SEC A		SEC B		SEC C	
	FRT	RR	FRT	RR	FRT	RR
OFF	7,8	1,2	12,1	12,1	6,7	1
−	7,9	1,3	12,2	12,2	6,8	2
+	7,10	1,4	12,3	12,3	6,9	3
AC	7,11	1,5	12,4	12,4	6,10	4
OHMS	7,12	2,6	12,5	12,5	6,11	5

Figure 9-4. Multimeter ME-26A/U, schematic diagram.

Figure 9-4. Multimeter ME-26A/U, schematic diagram

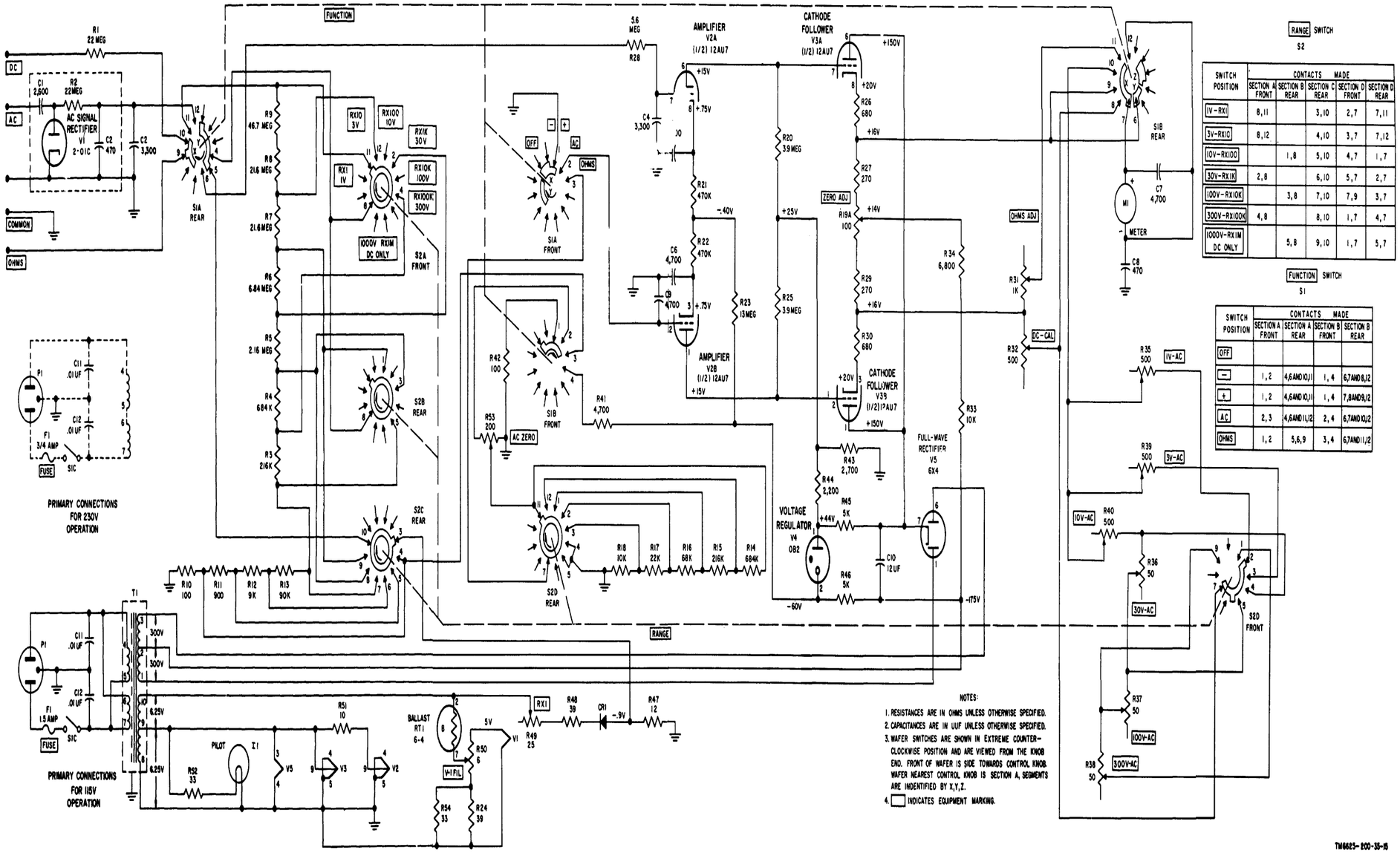

RANGE SWITCH S2

SWITCH POSITION	CONTACTS MADE				
	SECTION A FRONT	SECTION B REAR	SECTION C REAR	SECTION D FRONT	SECTION D REAR
1V-RX1	8,11		3,10	2,7	7,11
3V-RX10	8,12		4,10	3,7	7,12
10V-RX100		1,8	5,10	4,7	1,7
30V-RX1K	2,8		6,10	5,7	2,7
100V-RX10K		3,8	7,10	7,9	3,7
300V-RX100K	4,8		8,10	1,7	4,7
1000V-RX1M DC ONLY		5,8	9,10	1,7	5,7

FUNCTION SWITCH S1

SWITCH POSITION	CONTACTS MADE			
	SECTION A FRONT	SECTION A REAR	SECTION B FRONT	SECTION B REAR
OFF				
−	1,2	4,6 AND 10,11	1,4	6,7 AND 8,12
+	1,2	4,6 AND 10,11	1,4	7,8 AND 9,12
AC	2,3	4,6 AND 11,12	2,4	6,7 AND 10,12
OHMS	1,2	5,6,9	3,4	6,7 AND 11,12

Figure 9-5. U changed Multimeter ME-26B/U and ME-26C/U

TEAR ALONG PERFORATED LINE

RECOMMENDED CHANGES TO EQUIPMENT TECHNICAL PUBLICATIONS

SOMETHING WRONG WITH THIS PUBLICATION?

FROM: (PRINT YOUR UNIT'S COMPLETE ADDRESS)

DATE SENT

PUBLICATION NUMBER	PUBLICATION DATE	PUBLICATION TITLE

BE EXACT. . .PIN-POINT WHERE IT IS

PAGE NO.	PARA-GRAPH	FIGURE NO.	TABLE NO.

IN THIS SPACE TELL WHAT IS WRONG AND WHAT SHOULD BE DONE ABOUT IT:

PRINTED NAME, GRADE OR TITLE, AND TELEPHONE NUMBER

SIGN HERE:

DA FORM 1 JUL 79 2028-2

PREVIOUS EDITIONS ARE OBSOLETE.

P.S.—IF YOUR OUTFIT WANTS TO KNOW ABOUT YOUR RECOMMENDATION MAKE A CARBON COPY OF THIS AND GIVE IT TO YOUR HEADQUARTERS.

PIN: 019404-000

DEPARTMENT OF THE ARMY TECHNICAL BULLETIN

CALIBRATION PROCEDURE FOR ELECTRONIC VOLTIMETER ME-262/U

Headquarters, Department of the Army, Washington, D.C.
28 June 1976

REPORTING OF ERRORS

You can help improve this publication by calling attention to errors and by recommending improvements and stating your reason for the recommendations. Report such recommendations on DA Form 2028 (Recommended Changes to Publications and Blank Forms), and mail it direct to Commander, US Army Electronics Command, AITN: DRSEL-MA-Q, Fort Monmouth, NJ 07703. A reply will be furnished directly to you.

			Paragraph	Page
SECTION	I.	INTRODUCTION AND DESCRIPTION		
		Test instrument identification	1	2
		Calibration data card, DA Form 2416	2	2
		Calibration description	3	2
	II.	EQUIPMENT REQUIREMENTS		
		Equipment required	4	3
		Accessories required	5	3
	III.	PRELIMINARY OPERATIONS		
		Preliminary instructions	6	4
		Equipment setup	7	4
	IV.	CALIBRATION PROCESS, USING TOE 29-134H		
		Frequency response	8	5
		Meter accuracy	9	5
		Meter range	10	5
		Final procedure	11	7
	V.	CALIBRATION PROCESS, USING AN/GSM-256		
		Scale linearity and stability	12	8
		Frequency response	13	8
		Attenuator accuracy	14	8
		Meter range	15	9
		Final procedure	16	10

*This bulletin supersedes TB 116625624-35/1, 22 September 1966

SECTION I

INTRODUCTION AND DESCRIPTION

1. Test Instrument Identification. This bulletin provides instruction for the calibration of Electronic Voltmeter ME-262/U. The manufacturer's instruction manual was used as the prime data source in compiling these instructions. The equipment being calibrated will be referred to as the TI (test instrument) throughout this bulletin.

a. Model Variations. Variations among models are described in text.

b. Time and Technique. The time required for this calibration is approximately 3 hours, using the dc and low frequency technique.

2. Calibration Data Card, DA Form 2416. *a.* Forms, records, and reports required for calibration personnel at all levels are prescribed by TM 38-750. DA Form 2416 must be annotated in accordance with TM 38-750 for each calibration performed.

b. Adjustments to be reported on DA Form 2416 are designated (R) at the end of the sentence in which they appear. When adjustments are in tables, the (R) will follow the designated adjustment. Report only those adjustments made and designated with (R).

3. Calibration Description. TI parameters and performance specifications which pertain to this calibration are listed in table 1.

Table 1. Calibration Description

Test instrument parameters	*Performance specifications*
Voltage range	1 millivolt to 1000v p-p.
Accuracy	±2%, 20 Hz to 200 kHz ±4%, 5 Hz to 500 kHz.[1]
Stability	Satisfactory performance with any line voltage between 105 and 125 v.

[1]Not verified below 20 Hz.

SECTION II
EQUIPMENT REQUIREMENTS

4. Equipment Required. Table 2 identifies the specific equipment used in this calibration procedure. This equipment is issued with Secondary Transfer Standards Calibration Set AN/GSM-256, NSN 4931-00- 525-8175 and standards set TOE 29-134H and is to be used when performing this procedure. Alternate items may be used by the calibrating activity *when the equipment listed in table 2 is not available. The items selected must be verified to perform satisfactorily prior to use and must bear evidence of current calibration. The equipment must meet or exceed the minimum use specifications listed in table 2. The accuracies listed in table 2 provide a four-to-one accuracy ratio between the standard and TI. Where the four-to-one ratio cannot be met, the actual accuracy of the equipment selected is shown in parenthesis.

5. Accessories Required. The accessories listed in table 3 are issued with Secondary Transfer Standards Calibration Set AN/GSIM-256, NSN 4931-00-525-8175, and standards set TOE 29-134H and are to be used in this calibration procedure. When necessary, these items may be substituted by equivalent items unless specifically prohibited.

Table 2. Minimum Specifications of Equipment Required

Item	Common name	Minimum Use specifications	*Manufacturer, Model and Part Number*	
			TOE 29-134H	**AN/GSM-256**
A1	Auto Transformer1	Range: 105 to 125 vac1 Accuracy: ±1%	TF-510l.	General Radio, Model W10MIT3AS3 (7910809).
A2	Electronic Voltmeter	Range: 96 to 104 mvac Accuracy: +0.25%	ME-30 U (6625-00-669-0742).	Not required.
A3	Electronic Voltmeter	Range: 347 to 361 mvac Accuracy: ±0.25%a	ATE-202 U (6625-00-7090288).	Not required
A4	Meter Calibrator	Range: [1]1.21 to 360 v Range: [2]3.4.3 my to 1020 v Accuracy: ± 0.25%c	TS-682 GSMI-1 (662500-669-0747).	Ballantine, Model 421A-S2 (6625-00-10.5-8198).
A5	Ratio Transformer	Range: 0.001 to 0.1 Accuracy: +0.25%	TF-.384'U (6625-00-733-5914).	Not required.
A6	Signal Generator	Range: 20 Hz to 500 kHz Flatness: ±0.25%C	SG-71 FCC (6625-00-66902.55).	Hewlett-Packard, Model 652A (MIS-I 0224).

[1]Required for TOE 29-134H.
[2]Required for AN/,GSM-256.

Table 3. Accessories Required

Item	Common name	**Description and part number**	
		TOE 29-134h	**AN/GSM-256**
B1	Adapter	Single banana jack to Alligator clip (P:O Test Lead Set CX-1331 U).	Not required.
B2	Cable[1]	3O-in., RG-58:U with double banana plug terminations (493100-846-0010).	30-in., R-58/U with double banana plug terminations (7907470).
B3	Cable	Not required	36-in., RG-58K U with double banana and BNC plug termina-tions (7907471).
B4	Lead	24-in., with single banana plug termina-tions (red) (7907197).	Not required.
B5	Lead	24-in., with single banana plug termina-tions (blk) (7907498).	Not required.
B6	Termination	Not required.	50ohbm feed-thru Hewlett-Packard, M0DEL 11048B (11048B) P/OM.IS 10224).

[1]Two required for TOE 29134H.

6. Preliminary Instructions. *a.* The instructions outlined in this section are preparatory to the calibration process. Personnel should become familiar with sections I through IV when using standards set TOE 29-134H; sections I, II, and III and V when using Secondary Transfer Standards Calibration Set AN/ GSM-256 before beginning the calibration.

b. Items of equipment used in this procedure are referenced within the text by common name and item identification number as listed in tables 2 and 3. For the identification of equipment referenced by item numbers prefixed with A, see table 2, and for prefix B, see table 3.

WARNING

HIGH VOLTAGE is used during the performance of this calibration. DEATH ON CONTACT may result if personnel fail to observe safety precautions.

7. Equipment Setup. *a.* If TI meter does not indicate zero, adjust to zero, using adjusting screw located below meter face.

b. Connect TI to autotransformer (Al).

c. Connect autotransformer to 115-volt a.c. source and adjust controls of autotransformer to 115 volts.

d. Set TI ON-OFF switch to ON and allow at least 30 minutes for warmup.

SECTION IV
CALIBRATION PROCESS, USING TOE 29-134H

NOTE

Unless otherwise specified, verify the results of each test and take corrective action whenever the test requirement is not met before continuing with the calibration.

8. Frequency Response. *a. Performance Check*:

(1) Connect signal generator (A6) and electronic voltmeter (A2) to TI input, using two cables (B2)

(2) Position TI controls as listed in (a) (b), and (c) below.

(a) FULL SCALE switch to 100 MILLIVOLTS.

(b) POSITIVE-NEGATIVE switch to POSITIVE.

(c) Function switch to PEAK TO PEAK.

(3) Adjust signal generator frequency to 50 Hz and output amplitude for an indication of 100 millivolts on TI meter. Record electronic voltmeter indication.

(4) Increase signal generator frequency to 200 kHz keeping output amplitude to value recorded in (3) above. If TI meter does not indicate between 98 and 102 millivolts, perform b(1) through (5) below.

(5) Increase signal generator frequency to 500 kHz, keeping output amplitude to value recorded in (3) above. If TI does not indicate between 96 and 104 millivolts, perform b(l) through (5) below.

b. Adjustments.

(1) Adjust signal generator frequency to 400 kHz, keeping output amplitude to value recorded in a(3) above.

(2) Adjust C6 and C20 (fig. 1) in equal amounts until TI indicates 100 millivolts (R).

(3) Turn POSITIVE-NEGATIVE switch to NEGATIVE.

(4) Adjust C15 (fig. 1) until TI indicates 100 millivolts (R).

(5) Turn POSITIVE-NEGATIVE switch to POSITIVE.

(6) Repeat a(3), (4), and (5) above.

9. Meter Accuracy. *a. Performance Check*.

(1) Connect electronic voltmeter (A3) and signal generator (A6) to TI input, using two cables (B2).

(2) Turn TI FULL SCALE switch to 1000 MILLIVOLTS.

(3) Adjust signal generator frequency to 1000 Hz and output amplitude for an indication of 1000 millivolts on TI meter. If electronic voltmeter does not indicate between 346.5 and 360.5 millivolts, perform b(1) through (6) below.

(4) Turn TI FULL SCALE switch to 3.5 VOLTS. If TI does not indicate 1 volt, perform b(4) through (6) below.

(5) Turn TI FULL SCALE switch to 1000 MILLIVOLTS and function switch to PEAK. If TI does not indicate 500 millivolts, perform b(7) below.

b. Adjustments.

(1) Adjust signal generator output amplitude for an indication of 354 millivolts as indicated on electronic voltmeter.

(2) Adjust TI CAL ADJ until TI indicates 1000 millivolts.

(3) Turn TI FULL SCALE switch to 3.5 VOLTS.

(4) Adjust TI SCALE ADJ until TI meter indicates 1 volt.

NOTE

Tap meter lightly during adjustment.

(5) Turn TI FULL SCALE switch to 1000 MILLIVOLTS.

(6) Repeat (1) through (5) above until no further adjustments are required.

(7) Adjust PEAK ADJ until TI indicates 500 millivolts.

10. Meter Range. *a. Performance Check.*

(1) Connect ratio transformer (A5) output to TI input, using cable (B2).

(2) Connect ratio transformer input terminals to meter calibrator (A4) ac volts and common terminals, using leads (B4 and B5), adapter (B1), and cable supplied with meter calibrator.

(3) Turn TI FULL SCALE switch to 3.5 MILLIVOLTS and function switch to PEAK TO PEAK.

(4) Adjust ratio transformer to .001000.

(5) Adjust meter calibrator for an indication of 3.5 millivolts on TI meter. Meter calibrator will indicate between 1.212 and 1.262 volts rms.

(6) Repeat (3), (4), and (5) above at values listed in table 4. Meter calibrator will indicate within limits specified.

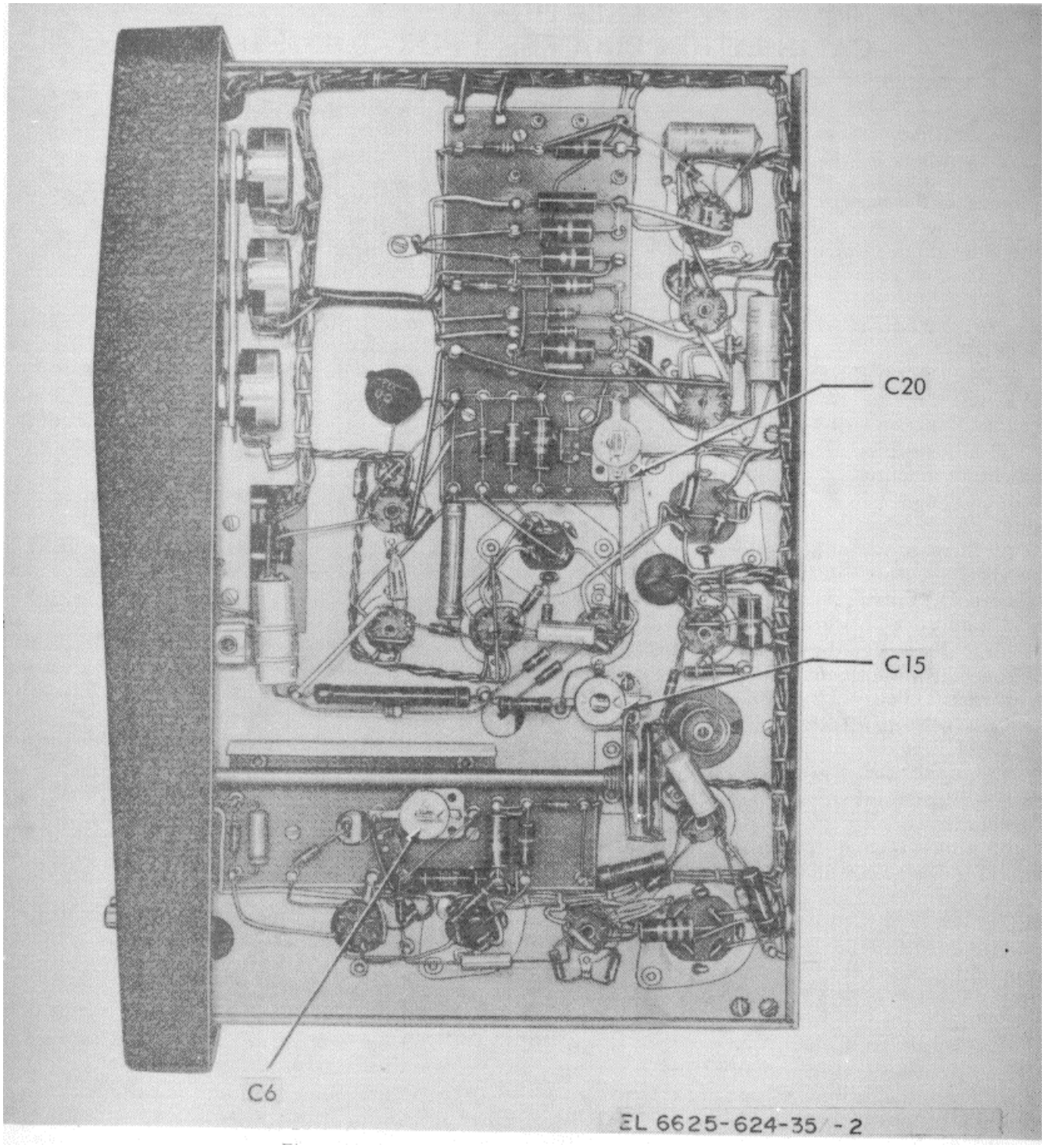

Figure 1. Electronic Voltmeter - right view or bottom view for rack mounted models.

Table 4. Meter Range

Test instrument		Ratio transformer setting	Meter calibrator indication	
L SCALE switch position	Meter indication		Min	Max
10 MILLIVOLTS	10 mv	.001000	3.465	3.605
35 MILLIVOLTS	35 mv	.010000	1.212	1.262
100 MILLIVOLTS	100 mv	.010000	3.465	3.605
350 MILLIVOLTS	350 mv	.100000	1.212	1.262
1000 MILLIVOLTS	400 mv	.100000	1.386	1.442
1000 MILLIVOLTS	600 mv	.100000	2.079	2.163
1000 MILLIVOLTS	800 mv	.100000	2.771	2.885
1000 MILLIVOLTS	1000 mv	.100000	3.465	3.605
3.5 VOLTS[1]	3.5 v	N/A	1.212	1.262
10 VOLTS	10 v	N/A	3.465	3.605
35 VOLTS	35 v	N/A	12.12	12.62
100 VOLTS	100 v	N/A	34.65	36.05
350 VOLTS	350 v	N/A	121.2	126.2
1000 VOLTS	1000 v	N/A	346.5	360.5

[1]Disconnect ratio transformer and connect meter calibrator directly to TI.

b. Adjustments. No adjustments can be made.

11. Final Procedure. *a.* Deenergize and disconnect all equipment and replace TI within protective cover.

b. In accordance with TM 38-750, annotate and affix DA Label 80 (U.S. Army Calibration System). When the TI cannot be adjusted within tolerance, annotate and affix DA Form 2417 (Unserviceable or Limited Use) tag.

NOTE

Unless otherwise specified, verify the results of each test and take corrective action whenever the test requirement is not met before continuing with the calibration.

12. Scale Linearity and Stability. *a. Performance Check.*

(1) Connect meter calibrator (A4) to TI input terminals, using cable (B2).

(2) Position TI controls as listed in ((t), (1), and (c) below.

(a) POSITIVE-NEGATIVE switch to POSITIVE.

(b) Function switch to PEAK TO PEAK.

(c) FULL SCALE switch to 1000 MILLIVOLTS.

(3) Adjust meter calibrator frequency to 1000 Hz and output voltage for an indication of 10 on TI meter upper scale.

(4) Turn FULL SCALE switch to 3.5 VOLTS. If TI meter does not indicate 1 on 1 to 3.5 scale, adjust SCALE ADJ until TI meter indicates 1 on 1 to 3.5 scale, then repeat (2), (3), and (4) above.

NOTE

Tap meter face lightly to reduce friction.

(5) Turn TI FULL SCALE switch to 1000 MILLIVOLTS.

(6) Adjust meter calibrator output voltage to 0.354 volt rms. If TI meter does not indicate to 10 on upper scale, adjust CAL ADJ until TI meter indicates 10 on upper scale.

NOTE

Tap meter face lightly when making adjustment.

(7) Adjust autotransformer (Al) to 105 volts.

(8) Adjust meter calibrator output voltage for an indication of 10 on TI meter upper scale. Meter cali bration output voltage will be between 0.347 and 0.361 volt rms.

(9) Repeat (8) above at autotransformer setting of 125 volts.

(10) Adjust autotransformer to 115 volts.

(11) Adjust meter calibrator output voltage for an indication of 10 on TI meter upper scale.

(12) Turn TI function switch to PEAK. If TI meter does not indicate 5 on upper scale, adjust PEAK ADJ. until TI meter indicates 5.

b. Adjustments. No adjustments can be made.

13. Frequency Response. *a. Performance Check.*

(1) Connect signal generator (A6) to TI input, using cable (B3) and termination (B6).

(2) Turn TI function switch to PEAK TO PEAK and FULL SCALE switch to 100 MILLIVOLTS.

(3) Adjust signal generator' frequency to 1000 Hz and output amplitude for an indication of 8 on TI upper scale.

(4) Adjust signal generator to expand mode.

(5) Vary signal generator frequency between 20 Hz and 200 kHz, keeping output amplitude to 8 on TI upper scale. If signal generator does not remain within +2 percent, perform b(1), (2), and (3) below.

(6) Vary signal generator frequency between 200 kHz and 500 kHz, keeping output amplitude to 8 on TI upper scale. If signal generator does not remain within +4 percent, perform b(l) through (4) below.

(7) Turn TI FULL SCALE switch to 1000 MILLIVOLTS.

(8) Adjust signal generator frequency to 1000 Hz and output amplitude for an indication of 8 on TI meter upper scale.

(9) Adjust signal generator to expand mode.

(10) Turn POSITIVE-NEGATIVE switch to NEGATIVE.

(11) Adjust signal generator output amplitude for an indication of 8 on TI meter upper scale. If signal generator does not indicate within +0.5 percent, perform b(5) and (6) below.

b. Adjustments.

(1) Adjust signal generator frequency to 400 kHz and output amplitude to zero percent.

(2) Adjust C6 and C20 (fig. 1) until TI meter indicates within 0.5 to 1 percent below indication of 8 on TI meter upper scale (R).

NOTE

Adjust C6 and C20 so both capacitors will have approximately the same capacitance.

(3) Repeat a (3), (4), and (5) above.

(4) Repeat a(6) above.

(5) Adjust signal generator output amplitude until TI meter indicates zero percent.

(6) Adjust C15 (fig. 1) until TI meter indicates 8 on upper scale (R).

14. Attenuator Accuracy. *a. Performance Check.*

(1) Turn TI POSITIVE-NEGATIVE switch to POSITIVE and FULL SCALE switch to 10 VOLTS.

(2) Adjust signal generator (A6) frequency to 1000 Hz and output amplitude for an indication of 8 on TI meter upper scale.

(3) Adjust signal generator to expand mode.

(4) Adjust frequency of signal generator to 200 kHz while maintaining an indication of 8 on TI meter upper scale. If signal generator does not indicate within ±2 percent, perform b(1) and (2) below.

(5) Turn TI FULL SCALE switch to 1000 MIL-LIVOLTS.

(6) Repeat (2), (3), and (4) above, except if signal generator does not indicate within ±2 percent, perform b(l) and (3) below.

b. Adjustments.

(1) Adjust signal generator to 0 percent indication.

(2) Adjust C2 (fig. 2) until TI meter indicates 8 on upper scale (R).

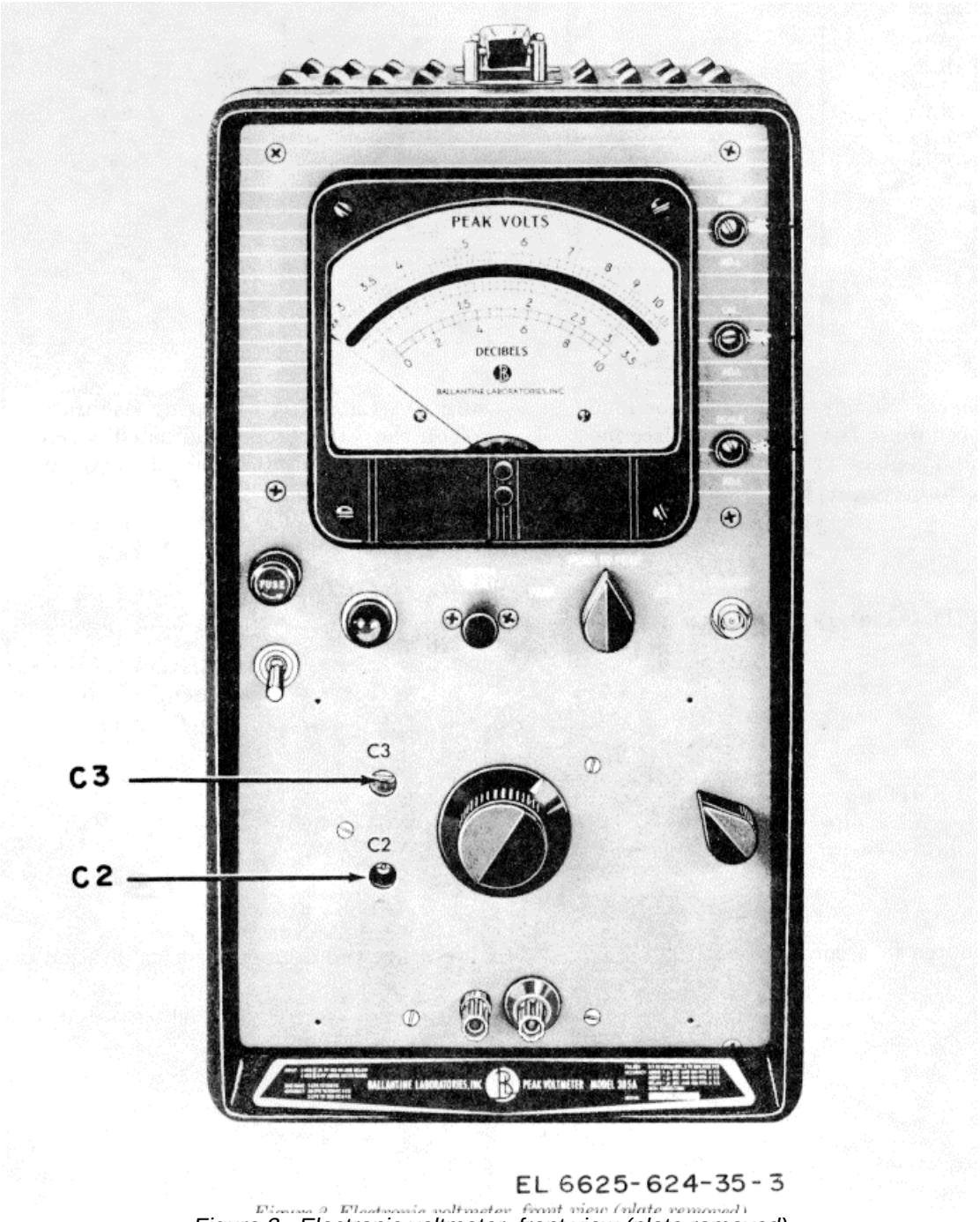

Figure 2. Electronic voltmeter, front view (plate removed)

(3) Adjust C3 (fig. 2) until TI meter indicates 8 on upper scale (R).

15. Meter Range. *a. Performance Check.*

(1) Connect meter calibrator (A4) to TI input, using cable (B2).

(2) Turn FULL SCALE switch to 3.5 MILLIVOLTS.

(3) Adjust meter calibrator frequency to 400 Hz and output amplitude for an indication of 3.5 millivolts on TI meter. Meter calibrator will indicate between 3.43 and 3.57 millivolts peak to peak.

(4) Repeat (2) and (3) above at TI FULL SCALE switch positions and meter indications listed in table

5. Meter calibrator will indicate within limits specified.

Table 5. Meter Ranges

Test instrument			Meter calibrator indication (volts peak-to peak)	
FULL SCALE switch position		**Meter indication**	**Min**	**Max**
10	MILLIVOLTS	10 mV	0.0098	0.0102
35	MILLIVOLTS	35 my	0.0343	0.0357
100	MILLIVOLTS	100 mV	0.098	0.102
350	MILLIVOLTS	350 mV	0.343	0357
1000	MILLIVOLTS	300 mV	0294	0306
1000	MILLIVOLTS	500 mV	0.490	0.510
1000	MILLIVOLTS	700 mV	0.686	0.714
1000	MILLIVOLTS	900 mV	0.882	0.918
1000	MILLIVOLTS	1000 mV	0.98	1.02
3.5	VOLTS	3.5 v	3.43	3.57
10	VOLTS	10 v	9.8	102
35	VOLTS	35 v	34.3	35.7
100	VOLTS	100 v	98	102
350	VOLTS	350 v	343	357
1000	VOLTS	1000 v	980	1020

b. Adjustments. No adjustments can be made.

16. Final Procedure. *a.* Deenergize and disconnect all equipment and replace TI within protective cover.

b. In accordance with TM 38-750, annotate and affix DA Label 80 (U.S. Army Calibration System). When the TI cannot be adjusted within tolerance, annotate and affix DA Form 2417 (Unserviceable or Limited Use) tag.

By Order of the Secretary of the Army:

FRED C. WEYAND
General, United States Army
Chief of Staff

Official:

PAUL T. SMITH
Major General, United States Army
The Adjutant General

Distribution:
To be distributed in accordance with DA Form 12-34A literature requirements for calibration procedures publications.

*** U.S. GOVERNMENT PRINTING OFFICE: 1976-665668/633**

TEAR ALONG PERFORATED LINE

RECOMMENDED CHANGES TO EQUIPMENT TECHNICAL PUBLICATIONS

THEN. . JOT DOWN THE DOPE ABOUT IT ON THIS FORM, CAREFULLY TEAR IT OUT, FOLD IT AND DROP IT IN THE MAIL!

SOMETHING WRONG WITH THIS PUBLICATION?

FROM: (PRINT YOUR UNIT'S COMPLETE ADDRESS)

DATE SENT

PUBLICATION NUMBER	PUBLICATION DATE	PUBLICATION TITLE

BE EXACT. . .PIN-POINT WHERE IT IS

PAGE NO.	PARA-GRAPH	FIGURE NO	TABLE NO.	IN THIS SPACE TELL WHAT IS WRONG AND WHAT SHOULD BE DONE ABOUT IT:

PRINTED NAME, GRADE OR TITLE, AND TELEPHONE NUMBER	SIGN HERE:

DA FORM 1 JUL 79 2028-2

PREVIOUS EDITIONS ARE OBSOLETE.

P.S.—IF YOUR OUTFIT WANTS TO KNOW ABOUT YOUR RECOMMENDATION MAKE A CARBON COPY OF THIS AND GIVE IT TO YOUR HEADQUARTERS.

PIN: 031933

TECHNICAL MANUAL

ORGANIZATIONAL, DIRECT SUPPORT, AND GENERAL SUPPORT MAINTENANCE REPAIR PARTS AND SPECIAL TOOLS LISTS (INCLUDING DEPOT MAINTENANCE REPAIR PARTS AND SPECIAL TOOLS)

FOR

MULTIMETERS

ME-26A/U (NSN 6625-00-360-2493)

ME-26B/U (NSN 6625-00-646-9409)

ME-26C/U (NSN 6625-00-646-9409)

AND

ME-26D/U (NSN 6625-00-913-9781)

HEADQUARTERS, DEPARTMENT OF THE ARMY
AUGUST 1978

TECHNICAL MANUAL
No. 11-6625-200-24P

HEADQUARTERS
DEPARTMENT OF THE ARMY
WASHINGTON, DC, 4 August 1978

ORGANIZATIONAL, DIRECT SUPPORT, AND GENERAL SUPPORT MAINTENANCE REPAIR PARTS AND SPECIAL TOOLS LISTS (INCLUDING DEPOT MAINTENANCE REPAIR PARTS AND SPECIAL TOOLS) FOR

MULTIMETERS
ME-26A/U (NSN 6625-00360-2493)
ME-26B/U (NSN 6625-00-649409)
ME-26C/U (NSN 6625-006469409)
AND
ME-26D/U (NSN 6625-00-913-9781)

Current as of 18 January 1978

REPORTING OF ERRORS

You can improve this manual by recommending improvements using DA Form 2028-2 located in the back of the manual. Simply tear out the self addressed form, fill it out as shown on the sample, fold it where shown, and drop it in the mail.

If there are no blank DA Form 2028-2 in the back of your manual, use the standard DA Form 2028 (Recommended Changes to Publications and Blank Forms) and forward to the Commander, US Army Communications and Electronics Materiel Readiness Command, ATTN: DRSEL-MA-Q, Fort Monmouth, New Jersey 07703.

In either case a reply will be furnished direct to you.

Table of Contents

			Page	Illus. Figure
SECTION	I.	Introduction	1	
	II.	Repair parts list	5	
Group	00.	Multimeters ME-26A/U, ME-26B/U, ME-26C/U, and ME-26D/U	5	1-16
SECTION	III.	Special tools list (Not applicable)		
	IV.	National stock number and part number index	36	

***This manual supersedes TM 11-625-200-24P, 17 September 1973.**

SECTION I
INTRODUCTION

1. Scope

This manual lists spares and repair parts; special tools; special test, measurement, and diagnostic equipment (TMDE), and other special support equipment required for performance of original, direct support, and general support maintenance of the ME-26A/U, ME-26B/U, ME-26C/U, and ME-26D/U. It authorizes the requisitioning and issue of spares and repair parts as indicated by the source and maintenance codes.

2. General

This Repair Parts and Special Tools List is divided into the following sections:

a. Section II. Repair Parts List. A list of spares and repair parts authorized for use in the performance of maintenance. The list also includes parts which must be removed for replacement of the authorized parts. Parts lists are composed of functional groups in numeric sequence, with the parts in each group listed in figure and item number sequence.

b. Section III. Special Tools List. Not applicable.

c. Section IV. National Stock Number and Part Number Index. A list, in National item identification number (NIIN) sequence, of all National stock numbers (NSN) appearing in the listings, followed by a list, in alphanumeric sequence, of all part numbers appearing in the listings. National stock numbers and part numbers are cross-referenced to each illustration figure and item number appearance.

3. Explanation of Columns

a. Illustration. This column is divided as follows:

(1) *Figure number.* Indicates the figure number of the illustration on which the item is shown.

(2) *Item number.* The number used to identify item called out in the illustration.

b. Source, Maintenance, and Recoverability (SMR) Codes.

(1) *Source code.* Source codes indicate the manner of acquiring support items for maintenance repair, or overhaul of end items. Source codes are entered in the first and second positions of the Uniform SMR Code format as follows:

Code	*Definition*
PA	-Item procured and stocked for anticipated or known usage.
XD	-A support item that is not stocked. When required, item will be procured through normal supply channels.

NOTE

Cannibalization or salvage may be used as a source of supply for any items source coded above except those coded XA and aircraft support items as restricted by AR 700-42.

(2) *Maintenance code.* Maintenance codes are assigned to indicate the levels of maintenance authorized to USE and REPAIR support items The maintenance codes are entered in the third and fourth positions of the Uniform SMR Code format as follows:

(a) The maintenance code entered in the third position will indicate the lowest maintenance level authorized to remove, replace, and use the support item. The maintenance code entered in the third position will indicate one of the following levels of maintenance*:*

Code	*Application/Explanation*
O-	Support item is removed, replaced, used at the organizational level.
H-	Support item is removed, replaced, used at the general support level.

(b) The maintenance code entered in the fourth position indicates whether the item is to be repaired and identifies the lowest maintenance level with the capability to perform complete repair (i.e., all authorized maintenance functions). This position will contain one of the following maintenance codes:

Code	*Application/Explanation*
Z-	Nonreparable. No repair is authorized.

(3) *Recoverability code.* Recoverability codes are assigned to support items to indicate the disposition action on unserviceable items. The recoverability code is entered in the fifth position of the Uniform SMR Code format as follows:

Recoverability codes	*Definition*
Z-	Nonreparable item. When unserviceable, condemn and dispose at the level indicated inposition 3.

c. National Stock Number. Indicates the National stock number assigned to the item and will be used for requisitioning purposes.

d. Part Number. Indicates the primary number used by the manufacturer (individual, company, firm, corporation, or Government activity), which controls the design and characteristics of the item by means of its engineering drawings, specifications, standards, and inspection requirements to identify an item or range of items.

NOTE

When a stock numbered item is requisitioned, the repair part received may have a different part number than the part being replaced.

e. Federal Supply Code for Manufacturer (FSCM). The FSCM is a 5-digit numeric code listed in SB 708-42 which is used to identify them manufacturer, distributor, or Government agency, etc.

f. Description. Indicates the Federal item name and, if required, a minimum description to identify the item.

g. Unit of Measure (U/M). Indicates the standard of the basic quantity of the listed item as used in performing the actual maintenance function. This measure is expressed by a two-character alphabetical abbreviation (e.g., ea, in, pr, etc). When the unit of measure differs from the unit of issue, the lowest unit of issue that will satisfy the required units of measure will be requisitioned.

h. Quantity Incorporated in Unit. Indicates the quantity of the item used in the breakout shown on the illustration figure, which is prepared for a functional group, subfunctional group, or an assembly.

4. Special Information

a. Usable on codes are shown in the description column. Uncoded items are applicable to all models. Identification of the usable on codes used in this publication are:

Code	*Used on*
AE2	ME-26A/U
AE3	ME-26B/U
AE4	ME-26C/U
AXL	ME-26D-U

b. The following publication pertains to the ME-26A/U, ME-26B/U, ME-26C/U, and ME-26/U and their components: TM 11-6625-200-15, Multimeters ME-26A/U, ME-26B/U, ME-26C/U, and ME-26D/U

5. How to Locate Repair Parts

a. When National stock number or part number is unknown.

(1) *First.* Using the table of contents, determine the functional group within which the item belongs. This is necessary since illustrations are prepared for functional groups and listings are divided into the same groups.

(2) *Second.* Find the illustration covering the functional group to which the item belongs.

(3) *Third.* Identify the item on the illustration and note the illustration figure and item number of the item.

(4) *Fourth.* Using the Repair Parts Listing, find the figure and item number noted on the illustration.

b. When National stock number or part number is known.

(1) *First.* Using the Index of National Stock Numbers and Part Numbers, find the pertinent National stock number or part number. This index is in NIIN sequence followed by a list of part numbers in alphanumeric sequence, cross-referenced to the illustration figure number and item number.

(2) *Second.* After finding the figure and item number, locate the figure and item number in the repair parts list.

6. Abbreviations

Not applicable.

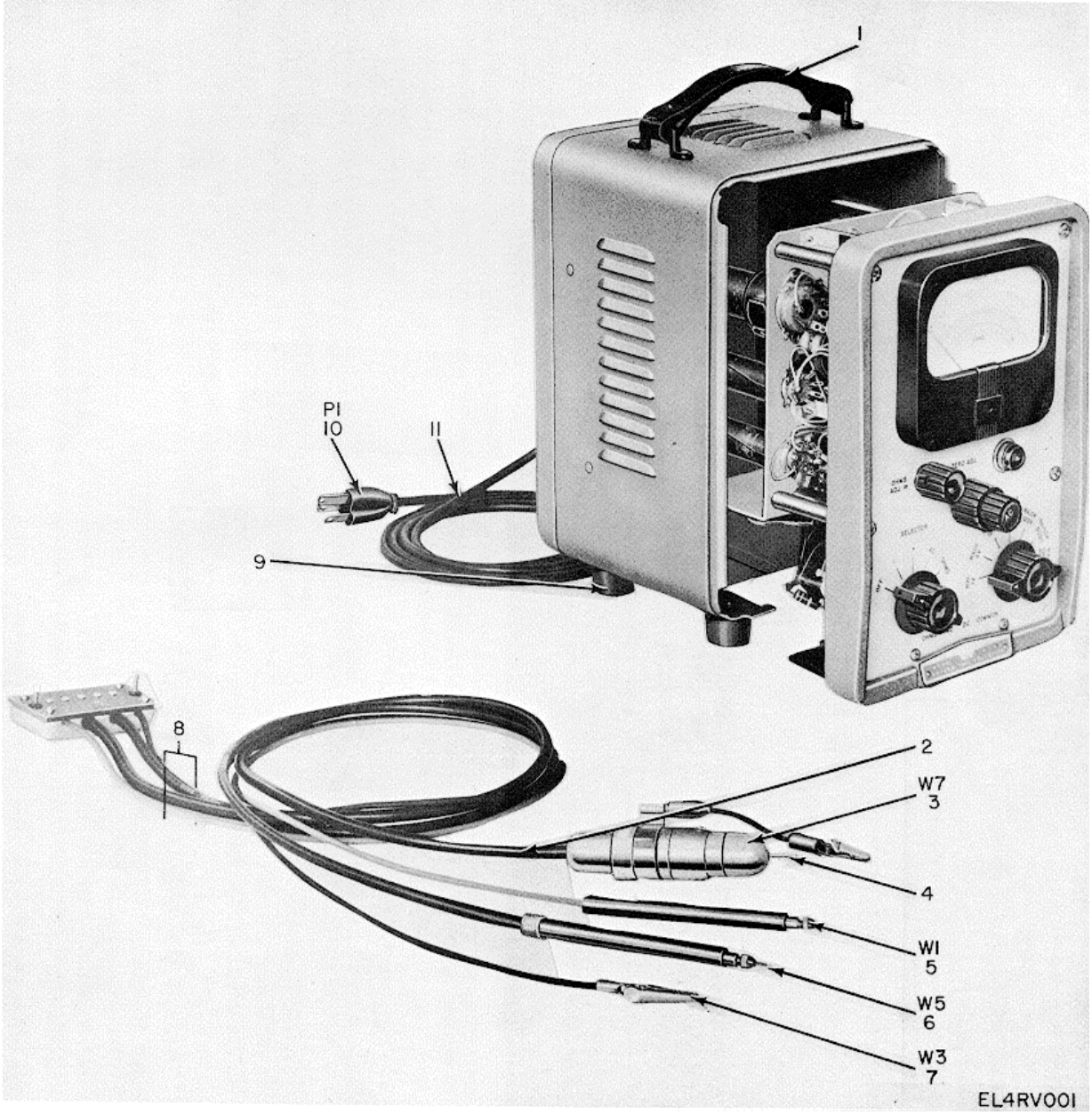

Figure 1. ME-26A/U Multimeter.

(1) ILLUSTRATION (a) FIG NO.	(b) ITEM NO.	(2) SMR CODE	(3) NATIONAL STOCK NUMBER	(4) PART NUMBER	(5) FSCM	(6) DESCRIPTION	USABLE ON CODE	(7) U/M	(8) QTY INC IN UNIT
						GROUP 00 ME-26A, B, C.D/U MULTIMETERS			
1	1	XDHZZ		1440-0002	00837	HANDLE, LUGGAGE	AE2	EA	I
1	2	PAHZZ	6145-00-635-9338	8410	70903	CABLE, RF	AE2	FT	4
1	3	PAHZZ	6625-00-898-7270	SCM339386	80063	LEAD, TEST	AE2	EA	1
1	4	XDHZZ		6580202Y2K	72982	PLUG, TIP	AE2	EA	3
1	5	PAHZZ	662S-00-821-2307	410821-95D	28480	LEAD, TEST	AE2	EA	1
1	6	PAHZZ	6625-00-068-1739	410821-95C	28480	LEAD, TEST	AE2	EA	1
1	7	PAHZZ	6625-00-825-6704	410821-95E	28480	LEAD, TEST	AE2	EA	1
1	8	PAHZZ	6625-00-302-4909	4I0821-95A	28480	LEAD SET, TEST	AE2	EA	1
1	9	PAHZZ	5340-00-846-8451	0403-0004	28480	BUMPER, RUBBER	AE2	EA	4
1	10	PAHZZ	5935-00-636-7145	UP121M	81349	CONNECTION, PLUG, ELEC	AE2	EA	I
1	11	PAHZZ	6145-00-284-0579	C003MGF3-18-0330	81349	CABLE, PWR, ELEC	AE2	FT	7

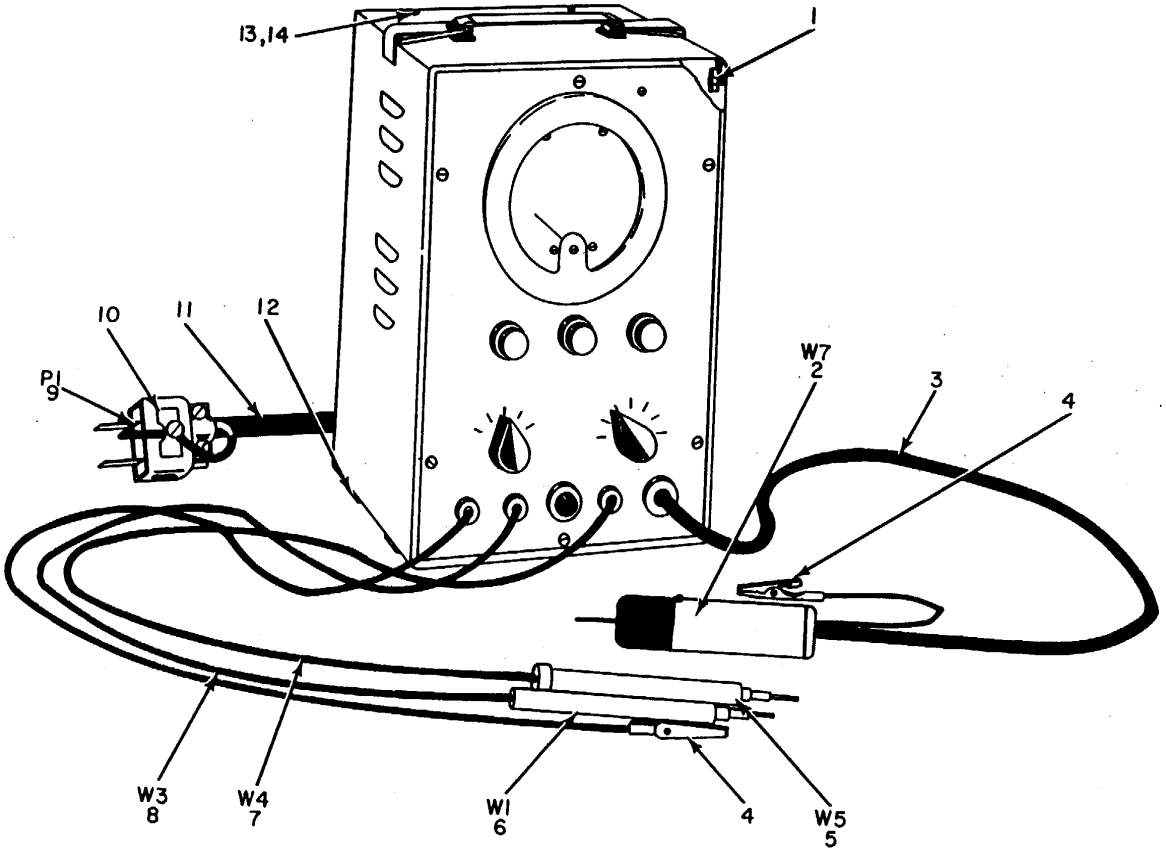

EL4RV002

Figure 2. ME-26B, C, D/U Multimeters.

(1) ILLUSTRATION (a) FIG NO.	(b) ITEM NO.	(2) SMR CODE	(3) NATIONAL STOCK NUMBER	(4) PART NUMBER	(5) FSCM	(6) DESCRIPTION	USABLE ON CODE	(7) U/M	(8) QTY INC IN UNIT
2	1	PAHZZ	5325-00-285-2012	A3-25	72794	STUD, TIUNLOCK.FSTNR	AE3.AE4.AXL	EA	4
2	2	PAHZZ	6625-00-898-7270	SMC339386	80063	LEAD, TEST	AE3.AE4.AXL	EA	1
2	3	PAHZZ	6145-00-583-9268	RG122U	81349	CABLE, RF	AE3, AE4, AXL	FT	4
2	4	PAHZZ	5999-00-204-5206	60	76545	CLIP, ELECTRICAL	AE3.AE4, AXL	EA	2
2	5	PAHZZ	6625-00-618-1766	81619	70902	LEAD, TEST	AE3, AE4, AXL I	EA	I
2	6	PAHZZ	6625-00-331-1471	319	83330	LEAD, TEST	AE3.AE4.AXL	EA	I
2	7	PAHZZ	6145-00-229-9862	8899BLACK	10903	WIRE, ELECTRICAL	AE3, AE4, AXL	FT	4
2	8	PAHZZ	6L45-00-249-8781	8899RED	70903	WIRE, ELECTIRICAL	AE3, AE4, AXL	FT	4
2	9	PAHZZ	5935-00-636-7145	UP21M	81349	CONNECTOR, PLUG, ELEC	AE3, AE4, AXL	EA	1
2	10	PAHZZ	6250-00-845-8390	81246	72619	ADAPTER	AE3.AE4, AXL	EA	1
2	11	PAHZZ	6145-00-284-0579	C003GF3-18-0330	81349	CABLE, PNR, ELEC	AE3.AE4, AXL	FT	7
2	12	PAHZZ	5340-00-846-8451	0403-0004	28480	BUMPER, RUBBER	AE3.AE4, AXL	EA	4
2	13	PAHZZ	5325-00-275-4480	GA3-200	72794	EYELET, TRNLK, FSTNR	AE3, AE4.AXL	EA	4
2	14	PAHZZ	5325-00-171-4680	S3-175	72794	LOCKSPRING.TRNLK	AE3.AE4.AXL	EA	4

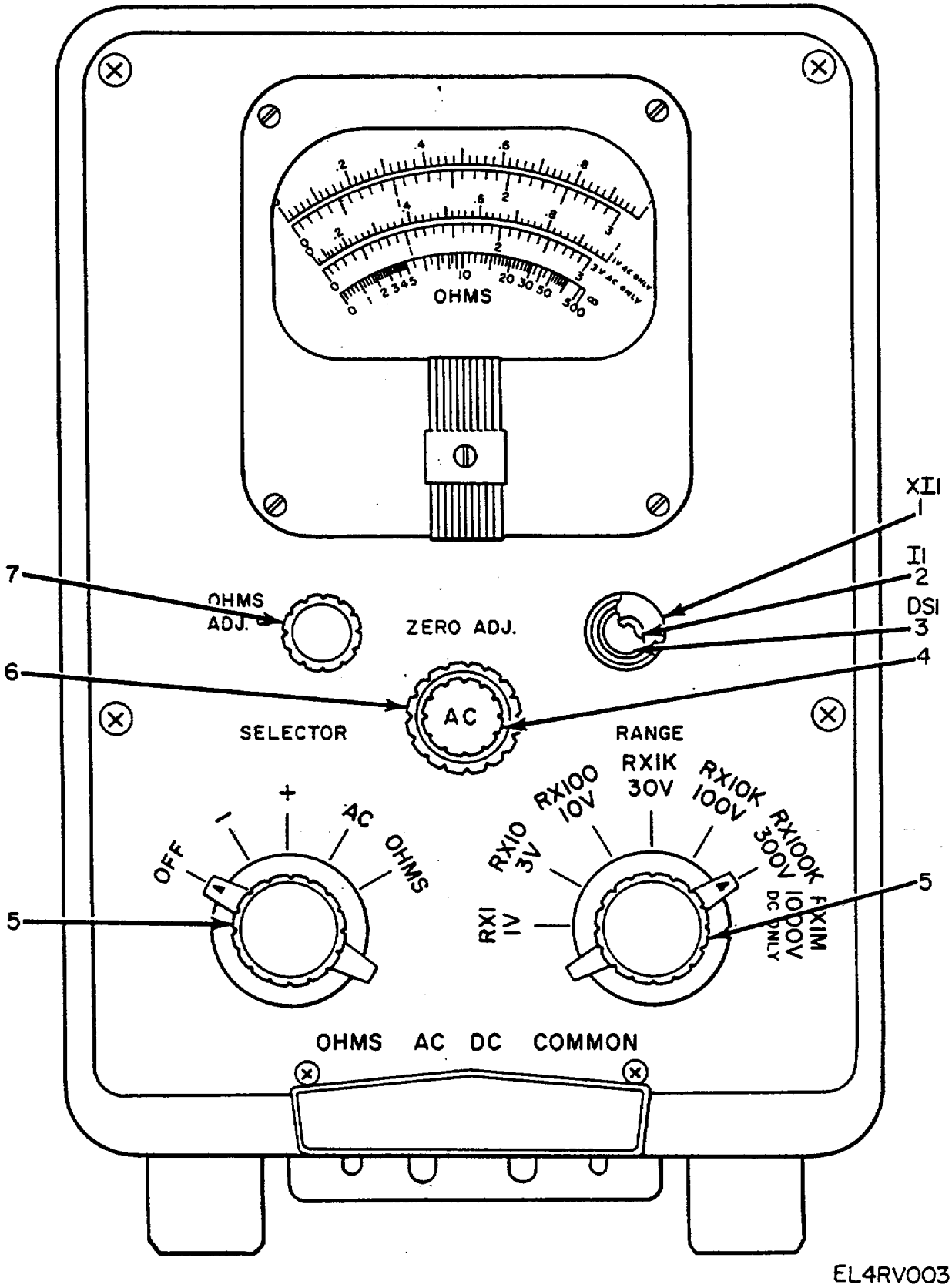

Figure 3. ME-26A/U Multimeter, Front Panel.

(1) ILLUSTRATION (a) FIG NO.	(b) ITEM NO.	(2) SMR CODE	(3) NATIONAL STOCK NUMBER	(4) PART NUMBER	(5) FSCM	(6) DESCRIPTION	USABLE ON CODE	(7) U/M	(8) QTY INC IN UNIT
3	1	PAHZZ	6210-00-299-4099	81081	72619	LAMPHOLDER	AE2	EA	1
3	2	POZZ	6240-00-155-8706	47	24446	LAMP, INCANDESCENT	AE2	EA	I
3	3	PAOZZ	6210-00-188-8779	81-121	72619	LENS, IND LIGIHT	AE2	EA	1
3	4	PAOZZ	5355-00-801-0470	G74AC	28480	KNOB	AE2	EA	1
3	5	PAOZZ	5355-00-547-7996	G74N	28480	KNOB	AE2	EA	2
3	6	PAOZZ	5355-00-803-4286	G74J	28480	KNOB	AE2	EA	I
3	7	PAOZZ	5355-00-721-8924	G74C	28480	KNOB	AE2	EA	I

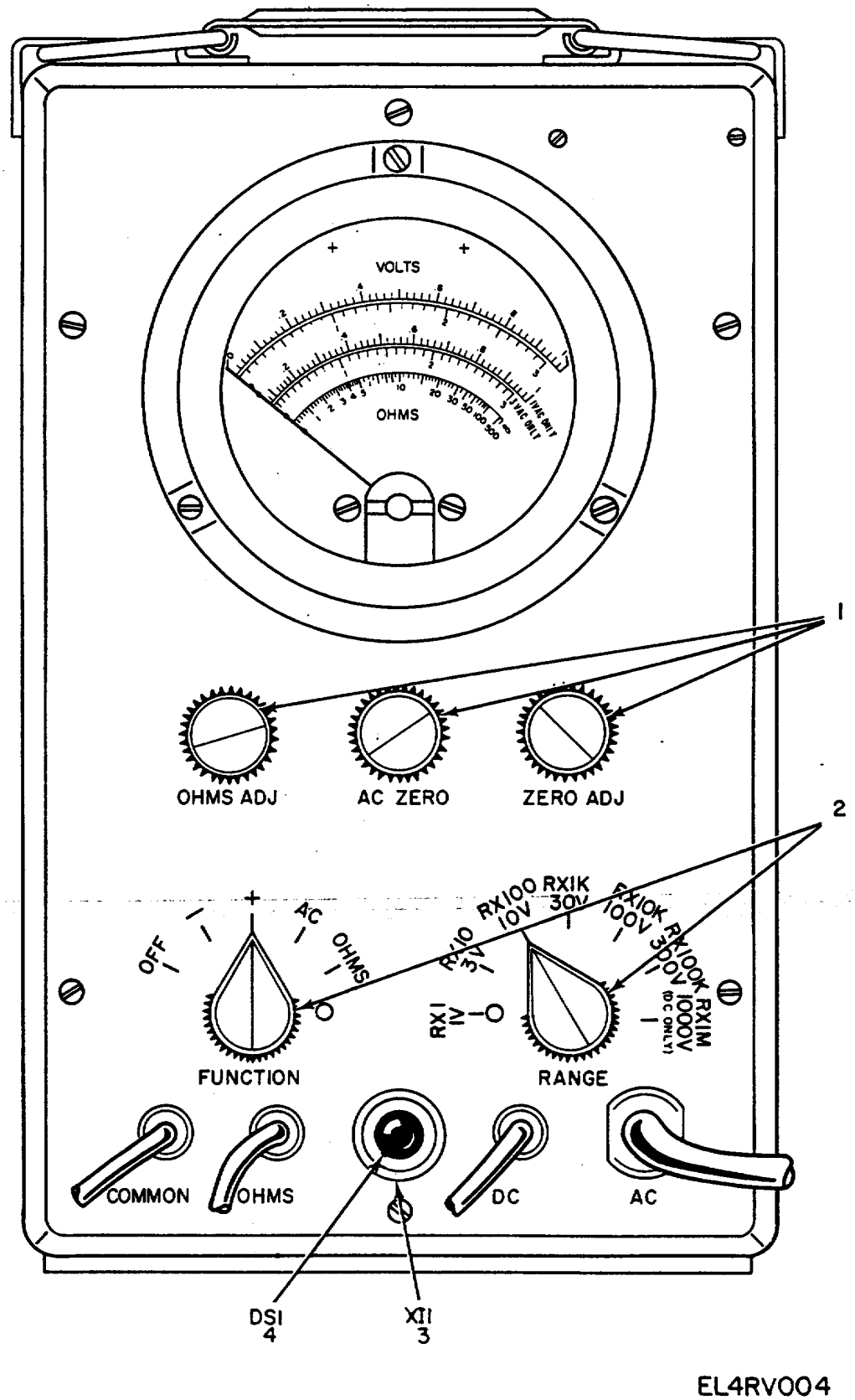

Figure 4. ME-26B, C, D/U Multimeters, Front Panel.

(1) ILLUSTRATION (a) FIG NO.	(b) ITEM NO.	(2) SMR CODE	(3) NATIONAL STOCK NUMBER	(4) PART NUMBER	(5) FSCM	(6) DESCRIPTION	USABLE ON CODE	(7) U/M	(8) QTY INC IN UNIT
4	1	PAOLZ	5355-00-543-0789	MS91528-1N2D	96906	KNOB	AE3, AE4, AXL	EA	3
4	2	PAOZZ	5355-00-556- 0145	MS91528-1K2D	96906	KNOB	AE3, AE4, AXL	EA	2
4	3	PAHZZ	6210-00-299-4099	810B1	72619	LAMPHOLDER	AE3, AE4, AXL	EA	1
4	4	XDHZZ		LH50BR2	81349	LIGHT, INDICATOR	AE3, AE4, AXL	EA	1

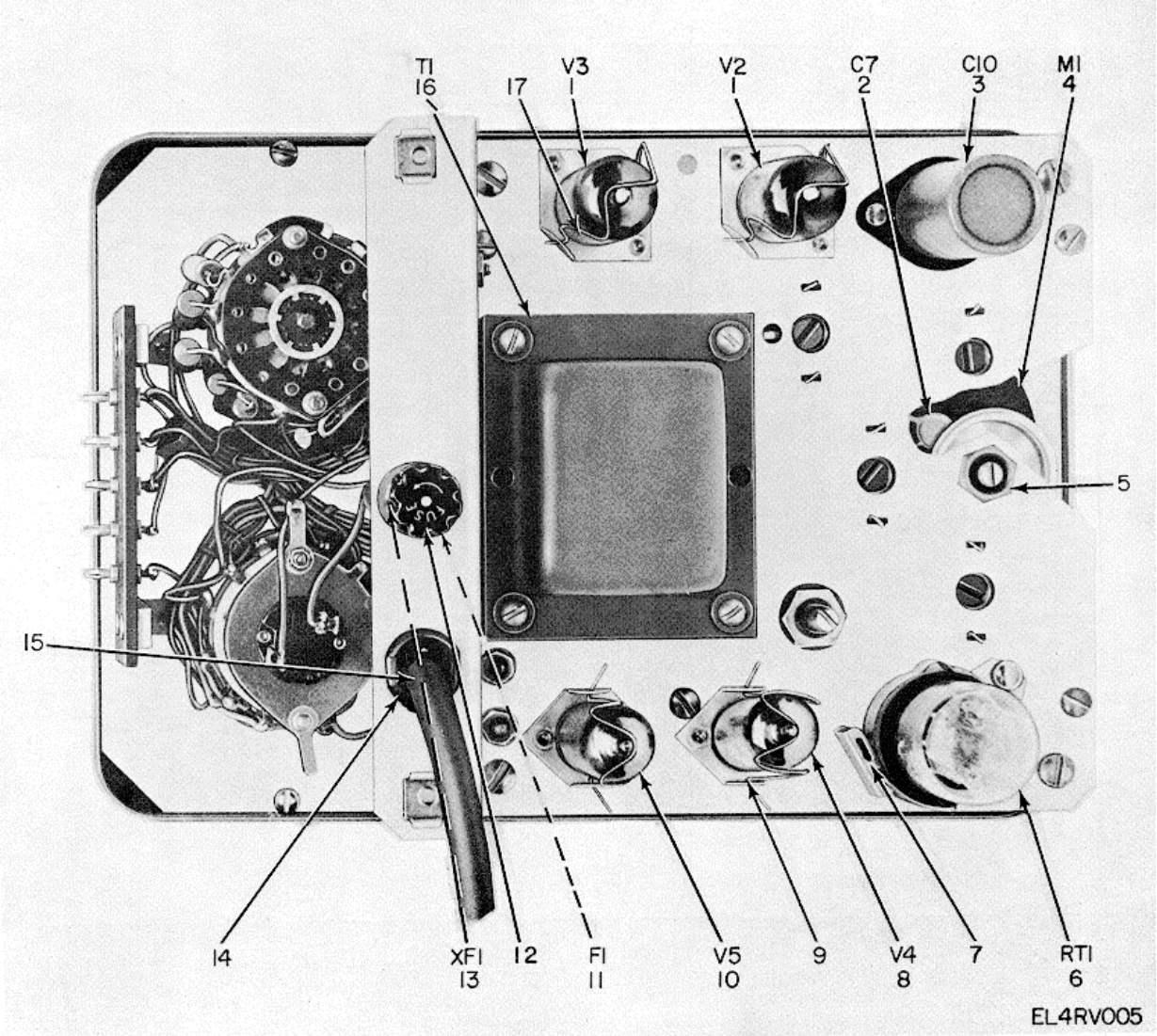

Figure 5. ME-26A/U Multimeter, Chassis, Rear View.

(1) ILLUSTRATION (a) FIG NO.	(b) ITEM NO.	(2) SMR CODE	(3) NATIONAL STOCK NUMBER	(4) PART NUMBER	(5) FSCM	(6) DESCRIPTION	USABLE ON CODE	(7) U/M	(8) QTY INC IN UNIT
5	1	PAHZZ	5960-00-636-2218	6189-12AU7	81349	ELECTRON TUBE	AE2	EA	2
5	2	PAHZZ	5910-00-722-1552	DD472	71590	CAPACITOR, FXD, CER	AE2	EA	1
5	3	PAHZZ	5910-00-816-4176	028434	56289	CAPACITOR, ELCTLT	AE2	EA	1
5	4	PAHZZ	6625-00-649-4958	1120-0009	28480	MULTIMETER, REPLMENT	AE2	EA	1
5	5	PAHZZ	5935-00-845-1376	410B21K	28480	NUT, BUSHING, RTNR	AE2	EA	1
5	6	PAHZZ	5905-00-258-0794	6-4	70563	RESISTOR, CUR, RGLT	AE2	EA	1
5	7	PAHZZ	5960-00-715-0179	1200D-63AHS	91506	RETAINER.TUBE	AE2	EA	1
5	8	PAHZZ	5960-00-624-4718	0B2WA	81349	ELECTRON TUBE	AE2	EA	1
5	9	PAHZZ	5340-00-844-3170	1400-0039	25480	RETAINER, TUBE	AE2	EA	2
5	10	PAHZZ	5969-00-272-9182	6X4WA	81349	ELECTRON, TUBE	AE2	EA	1
5	11	PAOZZ	5920-00-503-2882	313-400	75915	FUSE, CARTRIDGE, SEL	AE2	EA	I
5	11	PAOZZ	5920-00-504-8634	313-250	75915	FUSE, CARTRIDGE, SEL	AE2	EA	L
5	12	PAOZZ	5999-00-244-5150	9435-1-2	71400	CAP, ELECTRICAL	AE2	EA	L
5	13	PAHZZ	5920-00-892-9311	FHN27U	81349	FUSEHOLDER	AE2	EA	1
5	14	PAHZZ	5975-00-273-0788	6P1	28520	BUSHES, STRAIN RLF	AE2	EA	1
5	15	PAHZZ	5325-00-846-8452	500	0I538	GROMMET, RUBBER	AE2	EA	1
5	16	PAHZZ	5950-00-950-0524	9100-0021	28480	TRANSFORMER, SDN, SU	AE2	EA	1
5	17	PAHZZ	5960-00-284-6893	1400-0005	28480	RETAINER, TUBE	AE2	EA	2

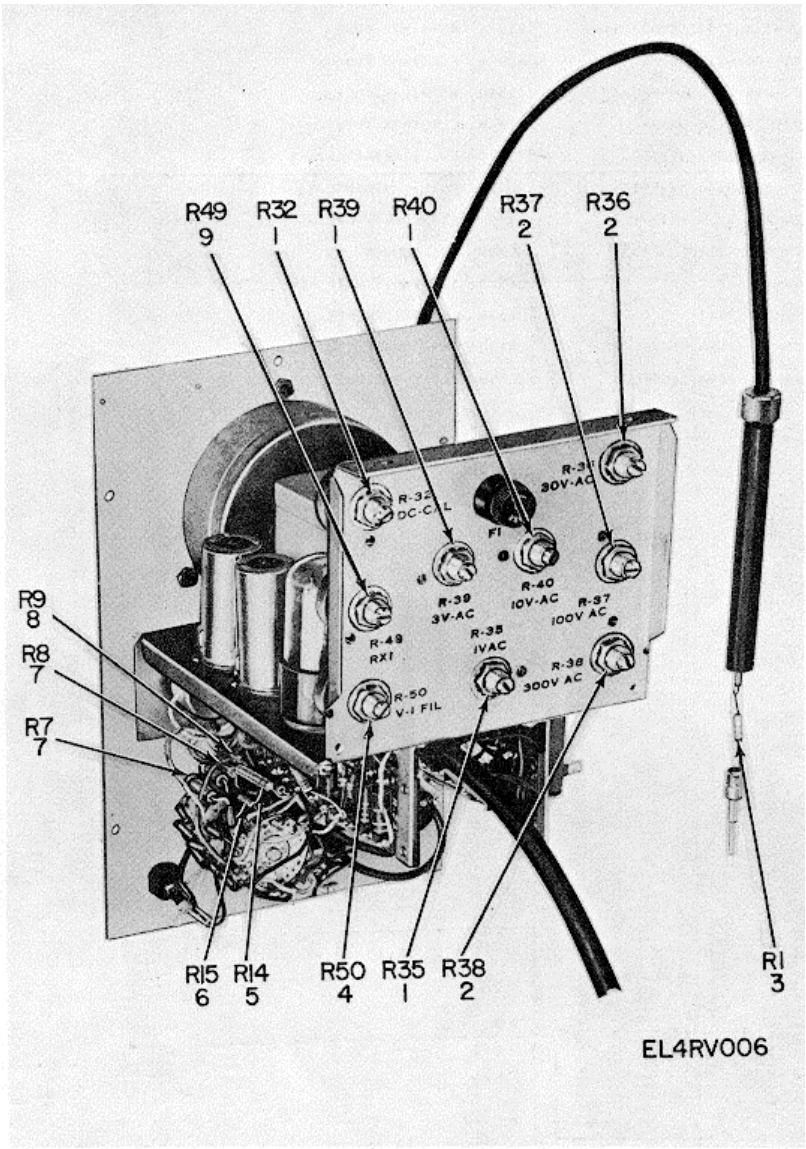

Figure 6. ME-26B, C, D/U Multimeters, Chassis, Rear View.

(1) ILLUSTRATION (a) FIG NO.	(b) ITEM NO.	(2) SMR CODE	(3) NATIONAL STOCK NUMBER	(4) PART NUMBER	(5) FSCM	(6) DESCRIPTION	USABLE ON CODE	(7) U/M	(8) QTY INC IN UNIT
6	1	PAHZZ	5905-00-581-1405	RA20NASA501A	81349	RESISTOR, VAR, SEL	AE3	EA	4
6	1	PAHZZ	5905-00-660-3641	RA20LASB501A	81349	RESISTOR, VARIABLE	AE4, AXL	EA	4
6	2	PAHZZ	5905-00-552-0561	RA20NASA5400A	81349	RESISTOR, VAR, SELECT	AE3	EA	3
6	2	PAHZZ	5905-00-702-6278	RA20LASBS00A	81349	RESISTOR, VARIABLE	AE4, AXL	EA	3
6	3	XDHZZ		RC09GF226J	81349	RESISTOR, FXD, CMPSN	AE3, AE4	EA	1
6	3	PAHZZ	5905-00-126-6703	RCR07G226JS	81349	RESISTOR, FXD, CMPSN	AXL	EA	1
6	4	PAHZZ	5905-00-655-3414	RA20NASA6R0A	81349	RESISTOR, VAR SEL	AE3	EA	1
6	4	PAHZZ	5905-00-722-1458	RA20LASB6R0A	81349	RESISTOR, VAR SEL	AE4AAXL	EA	1
6	5	XDHZZ		CP1-2-684000	81349	RESISTOR, FXD, FILM	AE3, AE4, AXL	EA	1
6	6	XDHZZ		CP1-2-216000	81349	RESISTOR, FXD, FILM	AE3, AE4, AXL	EA	1
6	7	PAHZZ	5905-00-539-5956	DC2-21-63	00656	RESISTOR, FXD, FILM	AE3.AE4, AXL	EA	2
6	8	PAHZZ	5905-00-755-0643	DC2-46-74	00656	RESISTOR, FXD, FILM	AE3, AE4, AXL	EA	1
6	9	PAHZZ	5905-00-721-2632	RA20LAS8250A	81349	RESISTOR, VARIABLE	AE3, AE4, AXL	EA	1

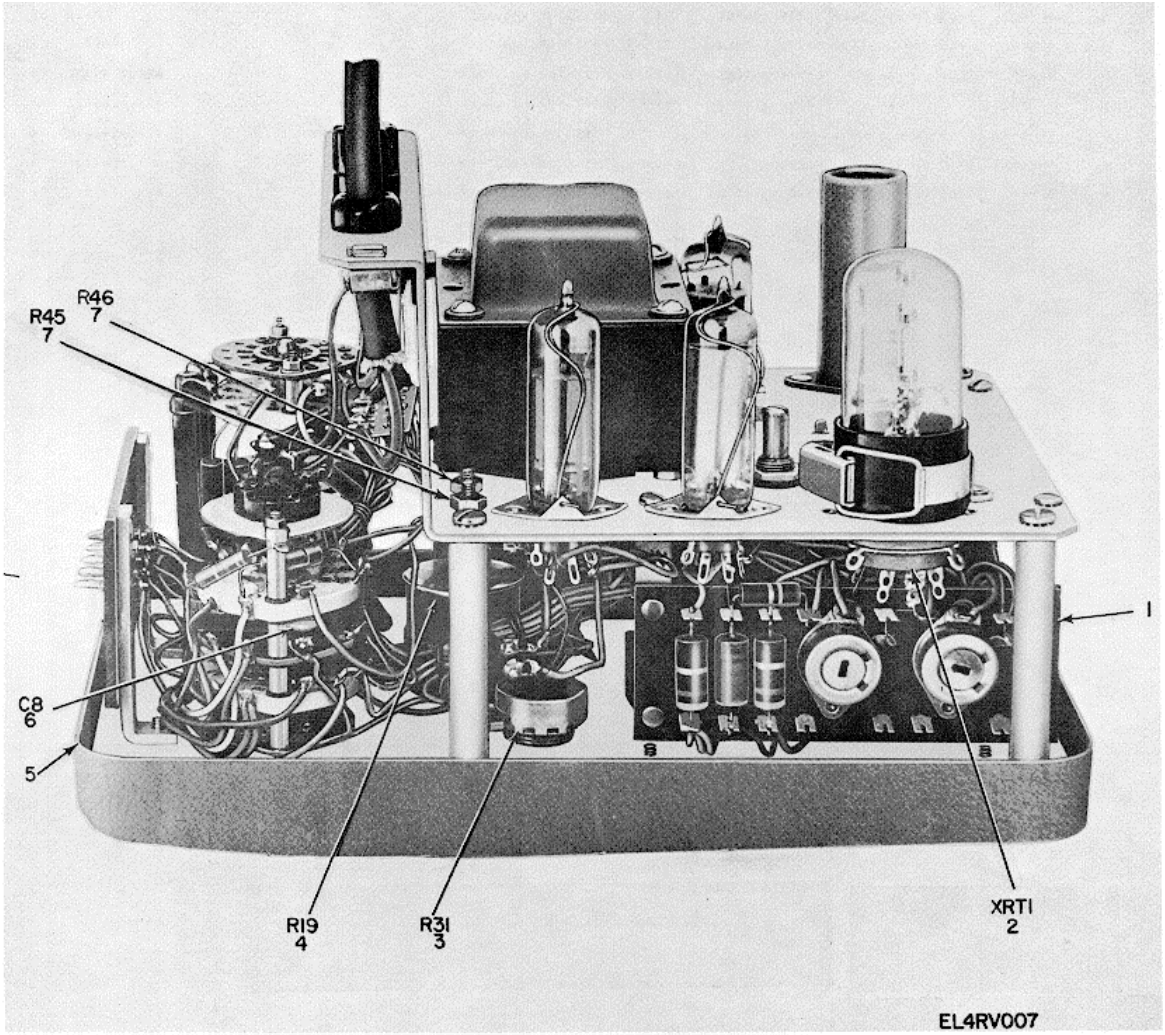

Figure 7. ME-26A/U Multimeter, Chassis, Left Side View.

(1) ILLUSTRATION (a) FIG NO.	(b) ITEM NO.	(2) SMR CODE	(3) NATIONAL STOCK NUMBER	(4) PART NUMBER	(5) FSCM	(6) DESCRIPTION	USABLE ON CODE	(7) U/M	(8) QTY INC IN UNIT
7	1	PAHZZ	5330-00-821-2506	58-41-0-63	94222	PACKING, PREFORMED	AE2	EA	1
7	2	PAHZZ	5935-00-257-6870	51A12272	71785	SOCKET, ELCTRN TUBE	AE2	EA	1
7	3	PAHZZ	5905-00-853-4863	3100-0036	81349	RESISTOR, VARIABLE	AE2	EA	1
7	4	PAHZZ	5905-00-853-4862	3100-0050	28480	RESISTOR, VARIABLE	AE2	EA	1
7	5	XDHZZ		56437	08474	PACKIING, PREFORMED	AE2	EA	1
7	6	PAHZZ	5910-00-821-5215	CK60AX471K	81349	CAPACITOR, FXD, CER	AE2	EA	1
7	7	PAHZZ	5905-00-539-4231	RW30G502	81349	RESISTOR, FXD.FILM	AE2	EA	2

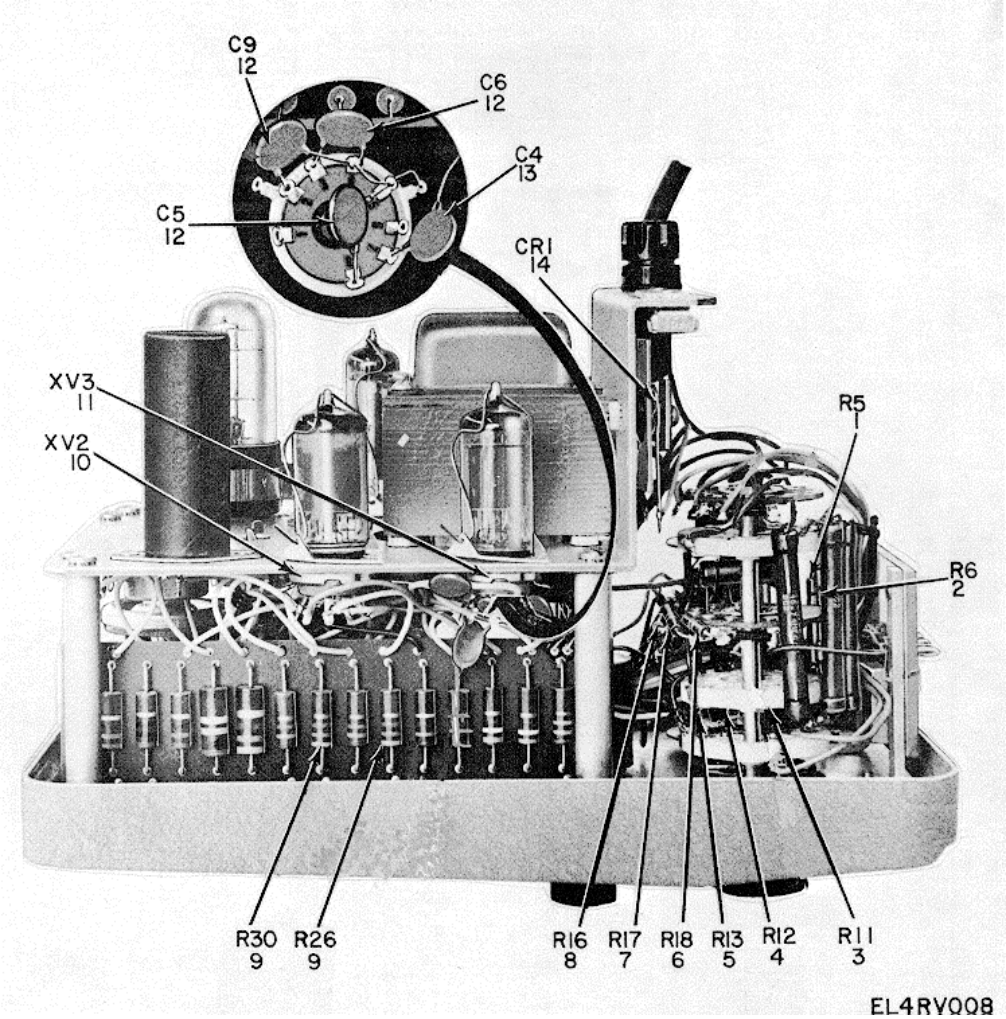

Figure 8. ME-26A/U Multimeter, Chassis, Right Side View.

(1) ILLUSTRATION (a) FIG NO.	(b) ITEM NO.	(2) SMR CODE	(3) NATIONAL STOCK NUMBER	(4) PART NUMBER	(5) FSCM	(6) DESCRIPTION	USABLE ON CODE	(7) U/M	(8) QTY INC IN UNIT
8	1	PAHZZ	5905-00-526-0493	CP1-2-2-16	81349	RESISTOR, FXD.FILM	AE2	EA	1
8	2	PAHZZ	5905-00-681-1077	CP1-6-84	81349	RESISTOR, FXD, FILM	AE2	EA	1
8	3	XDHZZ		DC1-2C	19701	RESISTOR, FXD.FILM	AE2	EA	1
8	4	PAHZZ	5905-00-681-1079	CP1-2-9000	81349	RESISTOR, FXD, FILM	AE2	EA	1
8	5	PAHZZ	5905-00-988-0149	RN70D9092F	81349	RESISTOR, FXD, FILM	AE2	EA	1
8	6	PAHZZ	5905-00-141-0591	RCR20G103JS	81349	RESISTOR, FXD, CMPSN	AE2	EA	1
8	7	PAHZZ	5905-00-171-2004	RC20GF223J	81349	RESISTOR, FXD, CMPSN	AE2	EA	1
8	8	PAHZZ	5905-00-106-9345	RCR20G683JS	81349	RESISTOR, FXD, CMPSN	AE2	EA	1
8	9	PAHZZ	5905-00-195-6791	RC20GF681J	81349	RESISTOR, FXD, CHPSN	AE2	EA	2
8	10	PAHZZ	5935-00-260-0516	TS102P01	81349	SOCKET, ELCTRN, TUBE	AE2	EA	1
8	11	PAHZZ	5935-00-222-9828	TS1103C01	81349	SOCKET, ELCTRN, TUBE	AE2	EA	1
8	12	PAHZZ	5910-00-823-1068	CK62Y472Z	81349	CAPACITOR, FXD, CER	AE2	EA	3
8	13	PAHZZ	5910-00-822-5684	CK62AW332M	81349	CAPACITOR, FXD, CER	AE2	EA	1
8	14	PAHZZ	6130-00-577-8470	RS30S100HS56	81349	RECTIFIER, METALLIC	AE2	EA	1

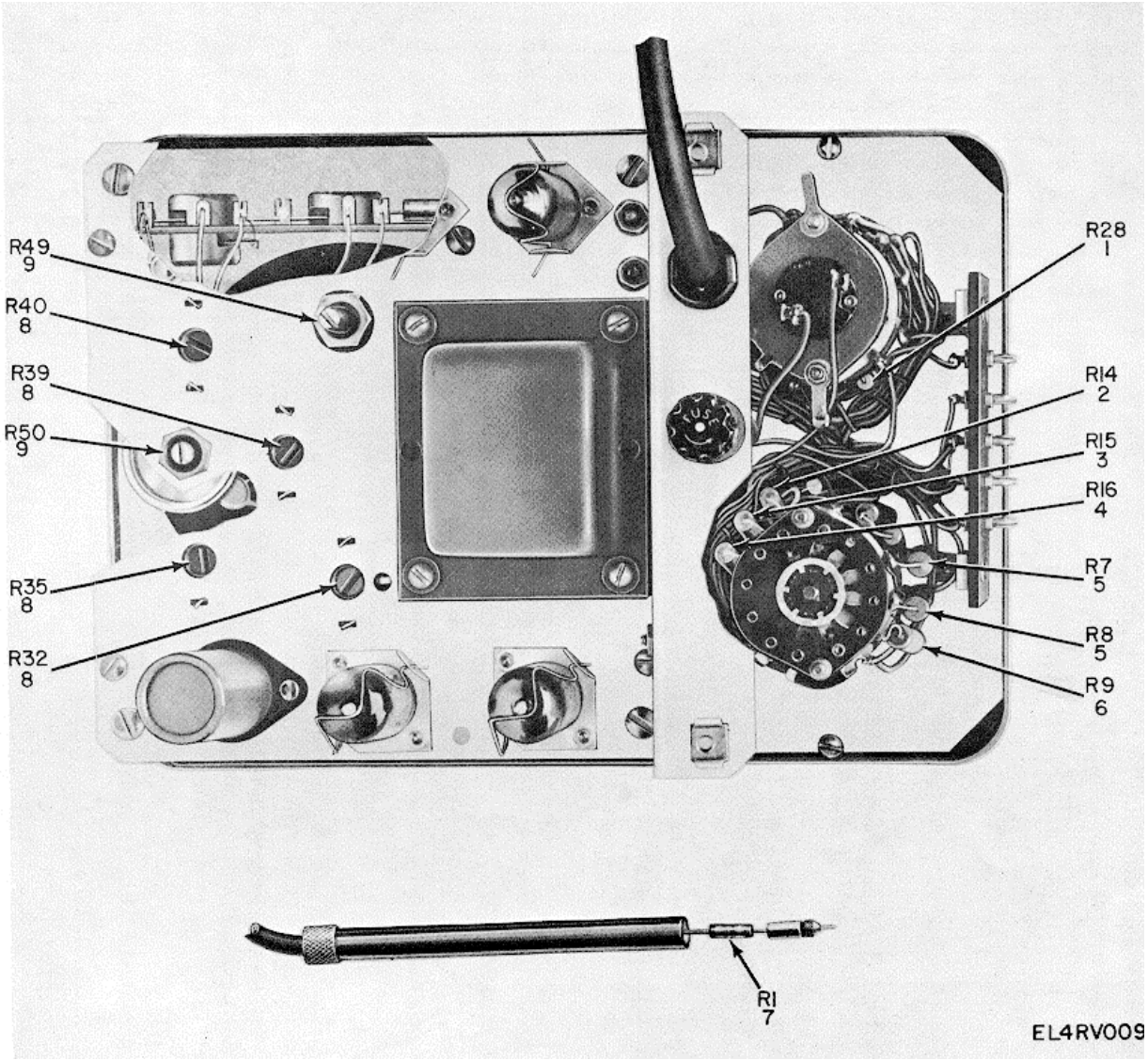

Figure 9. ME-26A/U Multimeter, Alignment Resistor Locations.

(1) ILLUSTRATION (a) FIG NO.	(b) ITEM NO.	(2) SMR CODE	(3) NATIONAL STOCK NUMBER	(4) PART NUMBER	(5) FSCM	(6) DESCRIPTION	USABLE ON CODE	(7) U/M	(8) QTY INC IN UNIT
9	1	PAHZZ	5905-00-279-2657	RC20GF565K	81349	RESISTOR, FXD, CMPSN	AE2	EA	1
9	2	PAHZZ	5905-00-902-2887	DC128	19701	RESISTOR, FXD, FILM	AE2	EA	1
9	3	XDHZZ		RN082163F	81349	RESISTOR, FXD, FILM	AE2	EA	1
9	4	PAHZZ	5905-00-106-9345	RCR20G683JS	81349	RESISTOR, FXD, CMPSN	AE2	EA	1
9	5	PAHZZ	5905-00-539-5956	DC2-21-63	00656	RESISTOR, FXD, FILM	AE2	EA	2
9	6	PAHZZ	5905-00-755-0643	DC2-46-74	00656	RESISTOR, FXD, FILM	AE2	EA	1
9	7	PAHZZ	5905-00-646-5763	RC32GF226J	81349	RESISTOR, FXD, CMPSN	AE2	EA	1
9	8	PAHZZ	5905-00-951-3363	2100-0185	28480	RESISTOR, VARIABLE	AE2	EA	4
9	9	PAHZZ	5905-00-913-6315	2100-0870	28480	RESISTOR, VARIABLE	AE2	EA	2

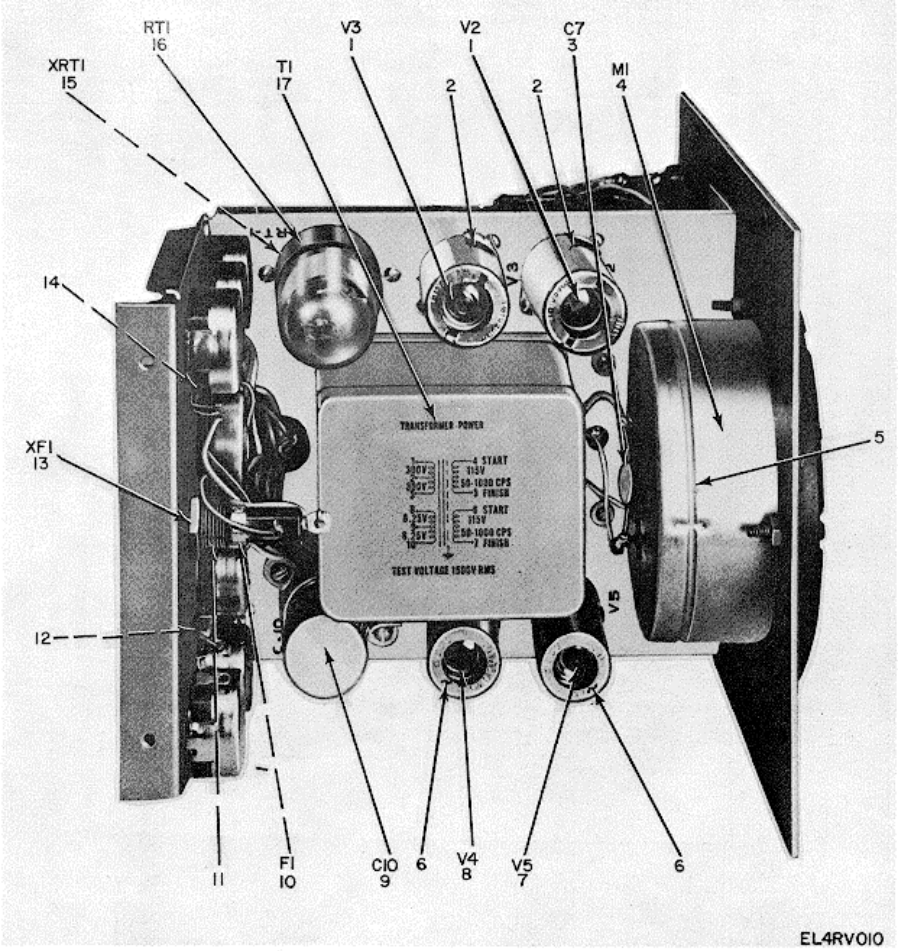

Figure 10. ME-26B, C, D/U Multimeters, Chassis, Top View.

(1) ILLUSTRATION (a) FIG NO.	(b) ITEM NO.	(2) SMR CODE	(3) NATIONAL STOCK NUMBER	(4) PART NUMBER	(5) FSCM	(6) DESCRIPTION	USABLE ON CODE	(7) U/M	(8) QTY INC IN UNIT
10	1	PAHZZ	5960-00-636-2218	6189-12AU7	81349	ELECTRON TUBE	AE3, AE4, AXL	EA	2
10	2	PAHZZ	5960-00-729-8150	TS102U03	81349	SHIELD, ELCTRN TUBE	AE3, AE4, AXL	EA	2
10	3	PAHZZ	5910-00-823-1068	CK62Y472Z	81349	CAPACITOR, FXD, CER	AE3, AE4, AXL	EA	1
10	4	PAHZZ	6625-00-670-7580	SMC200010	80063	MULTIMETER, REPLMENT	AE3, AE4, AXL	EA	1
10	5	XDHZZ		26-015	99395	PACKING.PREFCRMED	AE3, AE4, AXL	EA	1
10	6	PAHZZ	5960-00-264-3004	TS103U02	81349	SHIELD, ELCTRN TUBE	AE3, AE4, AXL	EA	2
10	7	PAHZZ	5960-00-272-9182	6X4W4	81349	ELECTRON TUBE	AE3, AE4, AXL	EA	1
10	8	PAHZZ	5960-00-624-4718	0B2WA	81349	ELECTRON TUBE	AE3, AE4, AXL	EA	1
10	9	PAHZZ	5910-00-165-2753	CE34C150R	81349	CAPACITOR.ELCTLT	AE3, AE4, AXL	EA	1
10	10	PAOZZ	5920-00-280-9328	F02D1R508	81349	FUSE, CARTRIDGE, SEL	AE3, AE4, AXL	EA	I
10	10	PAOZZ	5920-00-284-6804	F02GR7508	81349	FUSE, CARTRIDGE.SEL	AE3, AE4, AXL	EA	1
10	11	PAOZZ	5999-00-244-5150	9435-1-2	71400	CAP, ELECTRICAL	AE3, AE4, AXL	EA	1
10	12	PAHZZ	5975-00-273-0788	6P1	28520	BUSHING, STRAIN RLF	AE3, AE4, AXL	EA	1
10	13	PAHZZ	5920-00-892-9311	FHN27U	81349	FUSEHOLDER	AE3, AE4, AXL	EA	1
10	14	PAHZZ	5975-00-889-5118	2M1	28520	BUSHING, STRAIN RLF	AE3, AE4, AXL	EA	3
10	15	PAHZZ	5935-00-257-6870	51A12272	71785	SOCKET, ELCTRN TUBE	AE3, AE4, AXL	EA	1
10	16	PAHZZ	5905-00-258-0794	6-4	70563	RESISTOR, CUR, RGLT	AE3, AE4, AXL	EA	1
10	17	PAHZZ	5950-00-681-2563	C2350	88813	TRANSFORMER, SDN-SU	AE3, AE4, AXL	EA	1

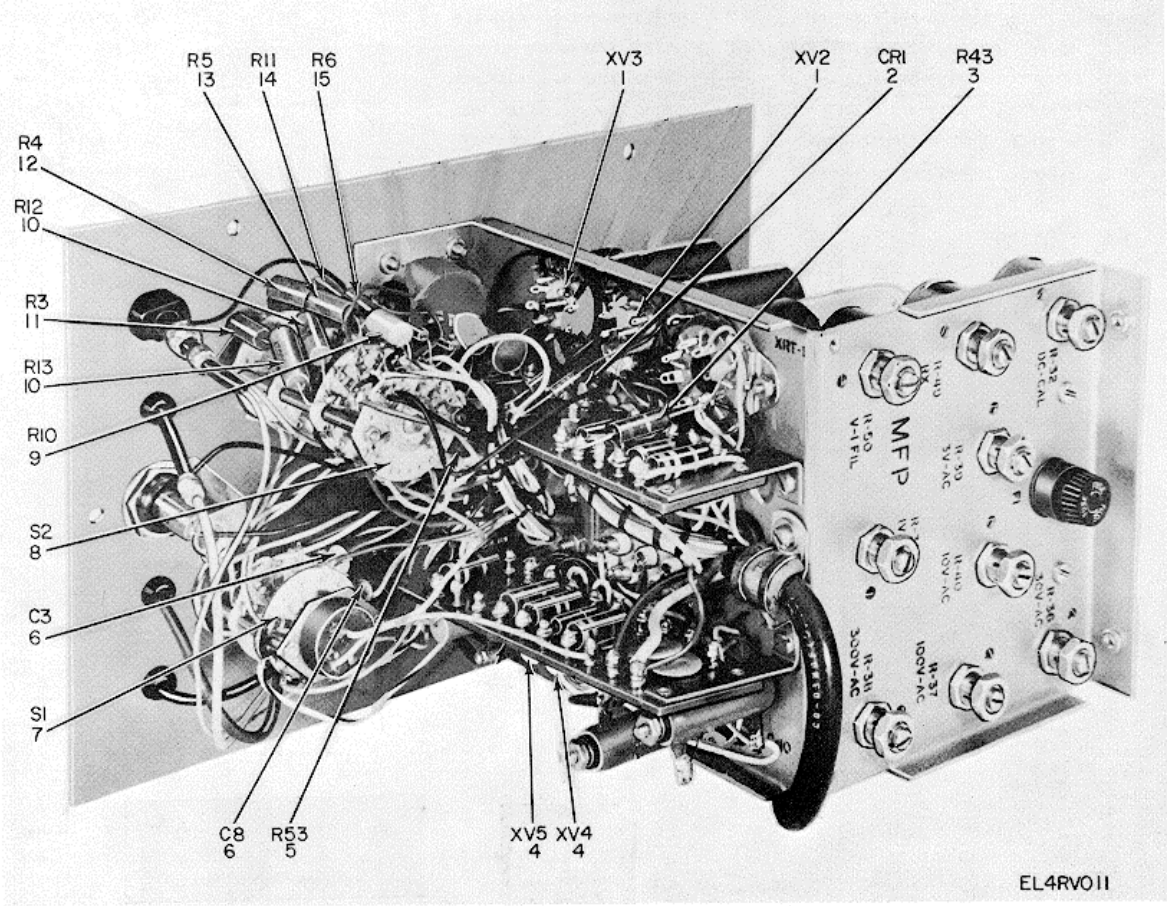

Figure 11. ME-26B, C, D/U Multimeter, Chassis, Rear View.

(1) ILLUSTRATION (a) FIG NO.	(b) ITEM NO.	(2) SMR CODE	(3) NATIONAL STOCK NUMBER	(4) PART NUMBER	(5) FSCM	(6) DESCRIPTION	USABLE ON CODE	(7) U/M	(8) QTY INC IN UNIT
11	1	PAHZZ	5935-00-721-0124	44F16388	71785	SOCKET, ELCTRN TUBE	AE3, AE4, AXL	EA	2
11	2	PAHZZ	6130-00-548-0757	4SFLH1RV	84970	RECTIFIER, METALLIC	AE3, AE4, AXL	EA	1
11	3	PAHZZ	5905-00-106-1245	RCR32G272JS	81349	RESISTOR, FXD, CMPSN	AE3, AE4, AXL	EA	1
11	4	PAHZZ	5935-00-581-6400	111-19-21-025	71785	SOCKET, ELCTRN TUBE	AE3, AE4, AXL	EA	2
11	5	PAHZZ	5905-00-228-6088	RCR32G331JS	81349	RESISTOR, FXD, CMPSN	AE3, AE4, AXL	EA	1
11	6	PAHZZ	5910-00-722-1552	DD472	71590	CAPACITOR, FXD, CER	AE3, AE4, AXL	EA	2
11	7	XDHZZ		45643H3AC	76854	SWITCH, ROTARY	AE3, AE4, AXL	EA	1
11	8	PAHZZ	5930-00-755-0765	43852H5C	76854	SWITCH, ROTARY	AE3, AE4, AXL	EA	1
11	9	PAHZZ	5905-00-552-3893	RN7081000F	81349	RESISTOR, FXD, FILM	AE3, AE4, AXL	EA	1
11	10	PAHZZ	5905-00-902-2887	DC1-28	19701	RESISTOR, FXD, FILM	AE3, AE4, AXL	EA	2
11	11	PAHZZ	5905-00-539-5437	RN25X2163F	81349	RESISTOR, FXD, FILM	AE3, AE4, AXL	EA	1
11	12	PAHZZ	5905-00-539-4971	RN7586183F	81349	RESISTOR, FXD, FILM	AE3, AE4, AXL	EA	1
11	13	PAHZZ	5905-00-087-0560	RN70D2154F	81349	RESISTOR, FXD, FILIM	AE3, AE4, AXL	EA	1
11	14	PAHZZ	5905-00-542-9116	CPI-2-900	81349	RESISTOR, FXD, FILM	AE3, AE4, AXL	EA	1
11	15	PAHZZ	5905-00-539-5955	DCL-6-837	19701	RESISTOR, FXD, FILM	AE3, AE4, AXL	EA	1

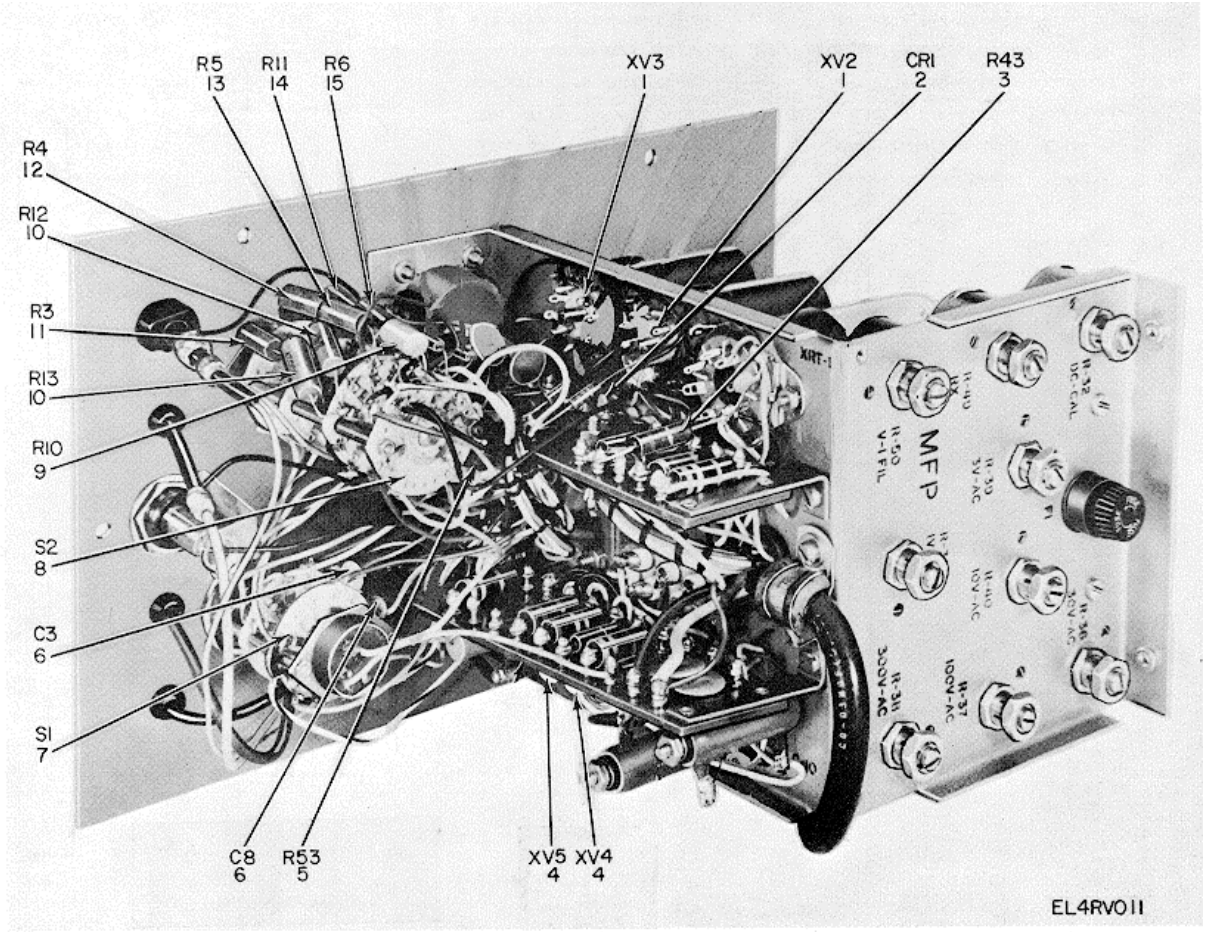

Figure 12. ME-26B, C, D/U Multimeters, Chassis, Bottom View.

(1) ILLUSTRATION (a) FIG NO.	(b) ITEM NO.	(2) SMR CODE	(3) NATIONAL STOCK NUMBER	(4) PART NUMBER	(5) FSCM	(6) DESCRIPTION	USABLE ON CODE	(7) U/M	(8) QTY INC IN UNIT
12	1	PAHZZ	5905-00-106-1245	RCR32G272JS	81349	RESISTOR, FXD, CMPSN	AE3, AE4, AXL	EA	1
12	2	PAHZZ	5310-00-680-7669	CLA632-1	46384	NUT, PLAIN, CLINCH	AE3, AE4, AXL	EA	6
12	3	PAHZZ	5310-00-141-1815	CL632-1	24347	NUT, PLAIN, CLINCH	AE3, AE4, AXL	EA	8
12	4	PAHZZ	5340-00-282-7966	6-5-16	95987	CLAMP, LOUP	AE3, AE4, AXL	EA	1
12	5	PAHZZ	5905-00-539-4231	RW30G502	81349	RESISTOR, FXD, FILM	AE3, AE4, AXL	EA	2
12	6	PAHZZ	5935-00-222-9828	TS103C01	81349	SOCKET, ELCTRN TUBE	AE3, AE4, AXL	EA	1
12	7	PAHZZ	5935-00-935-2231	M12883-01-2	81349	SOCKET, ELCTRN TUBE	AE3, AE4, AXL	EA	1
12	8	PAHZZ	5961-00-828-9184	IN253	81349	SEMICONDUCTOR, DIODE	AE3, AE4, AXL	EA	1
12	9	PAHZZ	5905-00-578-9129	RA20NASK102A	81349	RESISTOR, VAR, SEL	AE3	EA	1
12	9	PAHZZ	5910-00-578-2551	RA2ONASD102A	81349	RESISTOR, VAR, SEL	AE4, AXL	EA	1
12	10	PAHZZ	5910-00-821-5215	CK60AX471K	81349	CAPACITOR, FXD, CER	AE3, AE4, AXL	EA	1
12	11	XDHZZ		RA238AFK201A	81349	RESISTOR, VAR, SEL	AE3	EA	1
12	11	PAHZZ	5905-00-752-3834	RA20NASD201A	81349	RESISTOR, VARIABLE	AE4, AXL	EA	1
12	12	PAHZZ	5930-00-571-8675	81618	70902	SWITCH, ROTARY	AE3, AE4, AXL	EA	1
12	13	PAHZZ	5325-00-279-1235	S3448	76385	GROMMET, RUBBER	AE3, AE4, AXL	EA	1
12	14	PAHZZ	5910-00-822-5684	CK62AW332M	81349	CAPACITOR, FXD, CER	AE3, AE4, AXL	EA	1
12	15	PAHZZ	5930-00-577-8676	1617	70902	SWITCH, ROTARY	AE3, AE4, AXL	EA	1
12	16	XDHZZ		Y3986	76385	GROMMET, RUBBER	AF3, AE4, AXL	EA	1
12	17	XDHZZ		U2130	76385	GROMMET, RUBBER	AE3, AE4, AXL	EA	1
12	18	XDHZZ		CP1-2-216000	81349	RESISTOR, FXD, FILM	AE3, AE4, AXL	EA	1
12	19	XDHZZ		CP1-2-684010	81349	RESISTOR, FXD, FILM	AE3, AE4, AXL	EA	1
12	20	PAHZZ	5905-00-141-0591.	RCR20G103JS	81349	RESISTOR, FXD, CMPSN	AE3, AE4, AXL	EA	1
12	21	PAHZZ	5905-00-l7l-2004	RC20GF223J	81349	RESISTOR, FXD, CMPSN	AE3, AE4, AXL	EA	1
12	22	PAHZZ	5905-00-617-8014	RA20NASK101A	81349	RESISTOR, VAR, SEL	AE3	EA	1
12	22	PAHZZ	5905-00-581-0449	RA20NASD010A	81349	RESISTOR, VARIABLE	AE4, AXL	EA	1

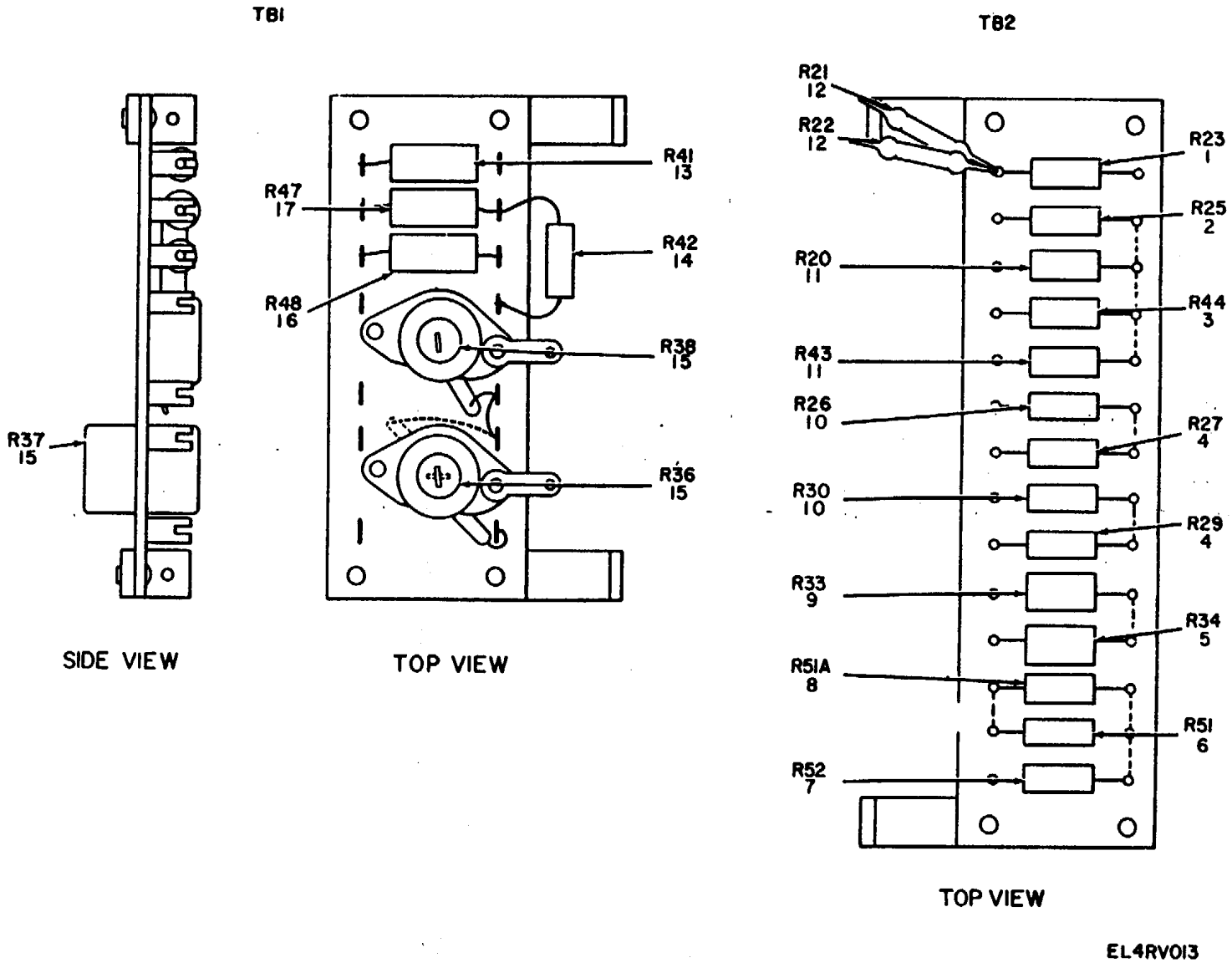

Figure 13. ME-26A/U Multimeter, Terminal Boards.

(1) ILLUSTRATION (a) FIG NO	(b) ITEM NO	(2) DESCRIPTION NATIONAL SMR CODE	(3) QTY INC STOCK NUMBER	(4) PART NUMBER	(5) FSCM	(6)	USABLE ON CODE	(7) U/M	(8) UNIT
13	1	PAHZZ	5905-00-454-2801	RCR32G136JS	81349	RESISTOR, FXD, CMPSN	AE2	EA	1
13	2	PAHZZ	5905-00-454-2812	RCR32G395JS	81349	RESISTOR, FXD, CMPSM	AE2	EA	I
13	3	PAHZZ	5905-00-111-8372	RCR32G222JS	81349	RESISTOR, FXD, CMPSN	AE2	EA	1
13	4	PAHZZ	5905-00-247-8722	RCR32G271JS	81349	RESISTOR, FXD, CMPSN	AE2	EA	2
13	5	PAHZZ	5905-00-185-8516	RC42GF103J	81349	RESISTOR, FXD, CMPSN	AE2	EA	1
13	6	PAHZZ	5905-00-104-8345	RCR20G560JS	81349	RESISTOR, FXD, CMPSN	AE2	EA	1
13	7	PAHZZ	5905-00-141-0720	RCR32G330JS	81349	RESISTOR, FXD, CMPSN	AE2	EA	1
13	8	PAHZZ	5905-00-454-2875	RCR32G180JS	81349	RESISTOR, FXD, CMPSN	AE2	EA	1
13	9	PAHZZ	5905-00-279-2528	RC42GF682J	81349	RESISTOR, FXD, CMPSN	AE2	EA	1
13	10	PAHZZ	5905-00-141-1071	RCR20G474JS	81349	RESISTOR, FXD, CMPSN	AE2	EA	2
13	11	PAHZZ	5905-00-279-2626	RC32GF681J	81349	RESISTOR, FXD, CMPSN	AE2	EA	2
13	12	PAHZZ	5905-00-106-1245	RCR32G272JS	81349	RESISTOR, FXD, CMPSN	AE2	EA	2
13	13	PAHZZ	5905-00-195-6449	RC42GF472K	81349	RESISTOR, FXD, CMPSN	AE2	EA	1
13	14	PAHZZ	5905-00-106-9344	RCR20G101JS	81349	RESISTOR, FXD, CMPSN	AE2	EA	1
13	15	PAHZZ	5905-00-897-9658	2100-0020	28480	RESISTOR, VARIABLE	AE2	EA	3
13	16	PAHZZ	5905-00-141-0720	RCR32G330JS	81349	RESISTOR, FXD, CMPSN	AE2	EA	1
13	17	PAHZZ	5905-00-807-7808	410B26	28480	RESISTOR, PRECISION	AE2	EA	1

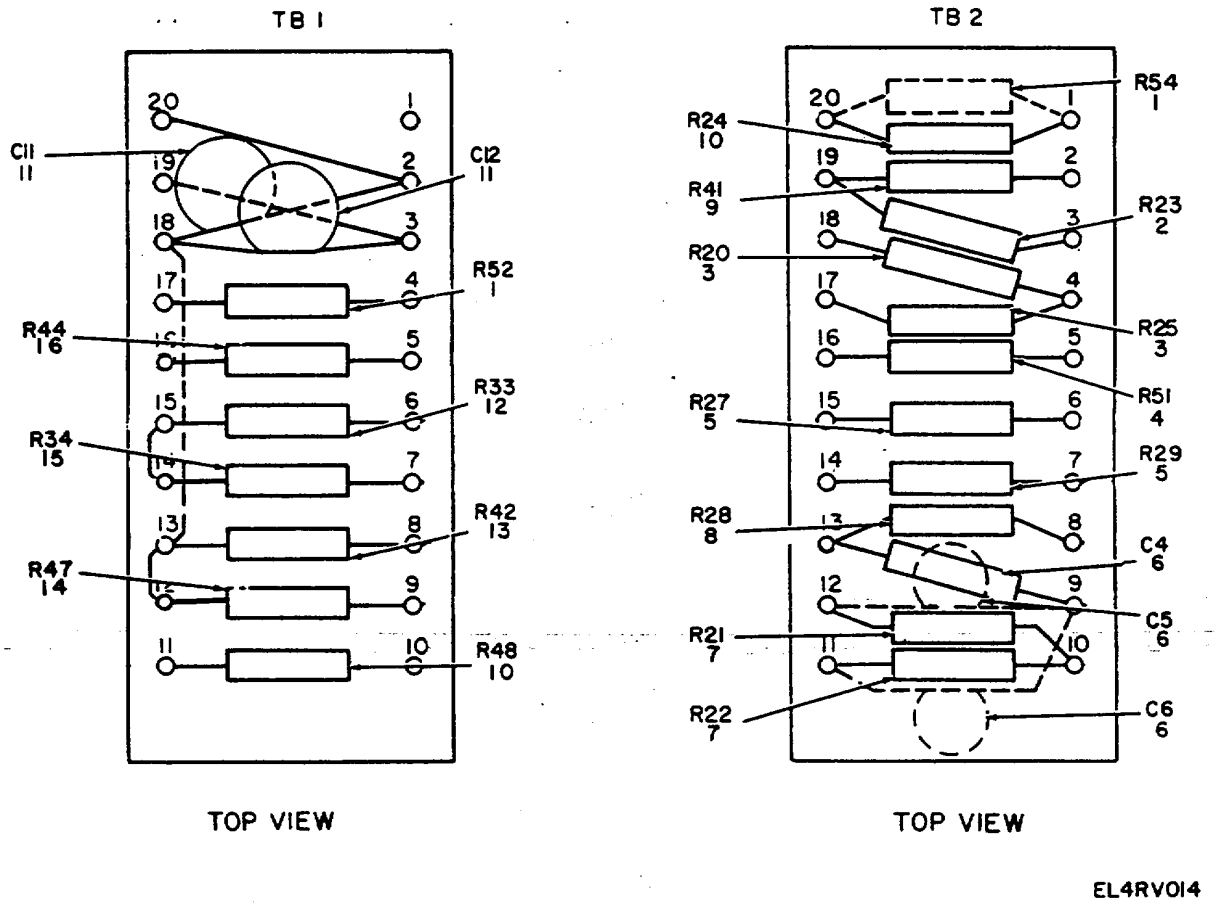

Figure 14. ME-26B, C, D/U Multimeters, Terminal Boards.

(1) ILLUSTRATION (a) FIG NO.	(b) ITEM NO.	(2) SMR CODE	(3) NATIONAL STOCK NUMBER	(4) PART NUMBER	(5) FSCM	(6) DESCRIPTION	USABLE ON CODE	(7) U/M	(8) QTY INC IN UNIT
14	1	PAHZZ	5905-00-141-0720	RCR32G330JS	81349	RESISTOR, FXD. CMPSN	AE3,AE4,AXL	EA	2
14	2	PAHZZ	5905-00-131-9992	RCR20G136JS	81349	RESISTOR, FXD. CMPSN	AE3,AE4,AXL	EA	1
14	3	PAHZZ	5905-00-279-2510	RCR20GF395J	81349	RESISTOR, FXD, CMPSN	AE3,AE4.AXL	EA	2
14	4	PAHZZ	5905-00-104-8345	RCR20G560JS	81349	RESISTOR, FXD, CMPSN	AE3,AE4.AXL	EA	I
14	5	PAHZZ	5905-00-171-2006	RC20GF271J	81349	RESISTOR, FXD.CMPSN	AE3,AE4,AXL	EA	2
14	6	PAHZZ	5910-00-722-1552	DD472	71590	CAPACITOR, FXD, CER	AE3,AE4,AXL	EA	3
14	7	PAHZZ	5905-00-104-8347	RCR32G101JS	81349	RESISTOR. FXD, CMPSN	AE3,AE4,AXL	EA	2
14	8	PAHZZ	5905-00-279-2657	RC20GF565K	81349	RESISTOR, FXD, CMPSN	AE3,AE4,AXL	EA	1
14	9	PAHZZ	5905-00-195-6449	RC42GF472K	81349	RESISTOR, FXD, CMPSN	AE3,AE4,AXL	EA	1
14	10	PAHZZ	5905-00-219-3418	RC42GF390J	81349	RESISTOR, FXD. CMPSN	AE3,AE4,AXL	EA	2
14	11	PAHZZ	5910-00-822-5683	CK63Y103Z	81349	CAPACITOR, FXD, CER	AE3,AE4,AXL	EA	2
14	12	PAHZZ	5905-00-185-8516	RC42GF103J	61349	RESISTOR, FXD, CMPSN	AE3,AE4,AXL	EA	1
14	13	PAHZZ	5905-00-106-9344	RCR20G101JS	81349	RESISTOR, FXD, CMPSN	AE3,AE4,AXL	EA	1
14	14	PAHZZ	5905-00-807-7808	410826	28480	RESISTOR, PRECISION	AE3,AE4,AXL	EA	1
14	15	PAHZZ	5905-00-279-2528	RC42GF682J	81349	RESISTOR, FXD. CMPSN	AE3,AE4,AXL	EA	1
14	16	PAHZZ	5905-00-111-8372	RCR32G222JS	81349	RESISTOR., FXD, CMPSN	AE3,AE4,AXL	EA	I

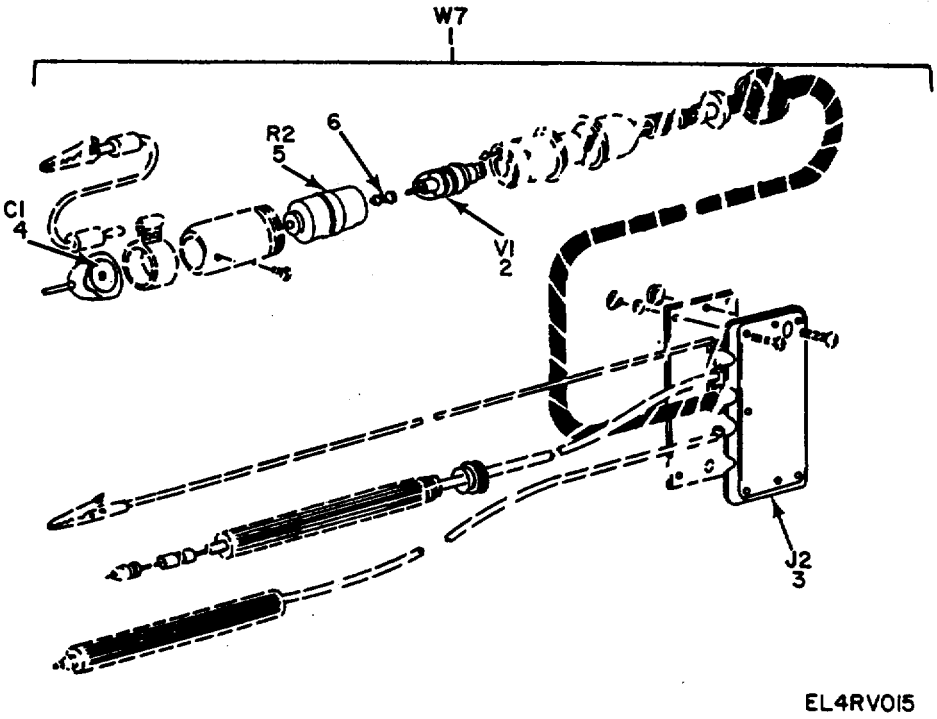

Figure 15. ME-26A/U Multimeter, AC Probe Disassembled.

(1) ILLUSTRATION (a) FIG NO.	(b) ITEM NO.	(2) SMR CODE	(3) NATIONAL STOCK NUMBER	(4) PART NUMBER	(5) FSCM	(6) DESCRIPTION	USABLE ON CODE	(7) U/M	(8) QTY INC IN UNIT
15	1	PAHZZ	6625-00-898-7210	SMC339386	80063	LEAD, TEST	AE2	EA	1
15	2	PAHZZ	5960-00-212-6019	2-01C	24289	ELECTRON TUBE	AE2	EA	1
15	3	PAHZZ	5940-00-816-8352	410B76M	72982	CONNECTOR, PLUG, ELEC	AE2	EA	1
15	4	PAHZZ	5910-00-051-2217	M6TA18A007M	71590	CAPACITOR. FXD. CER	AE2	EA	1
15	5	PAHZZ	5905-00-646-5763	RC32GF226J	81349	RESISTOR, FXD, CMPSN	AE2	EA	1
15	6	PAHZZ	5999-00-589-5213	410B21N	28480	CONTACT, ELECTRICAL	AE2	EA	1

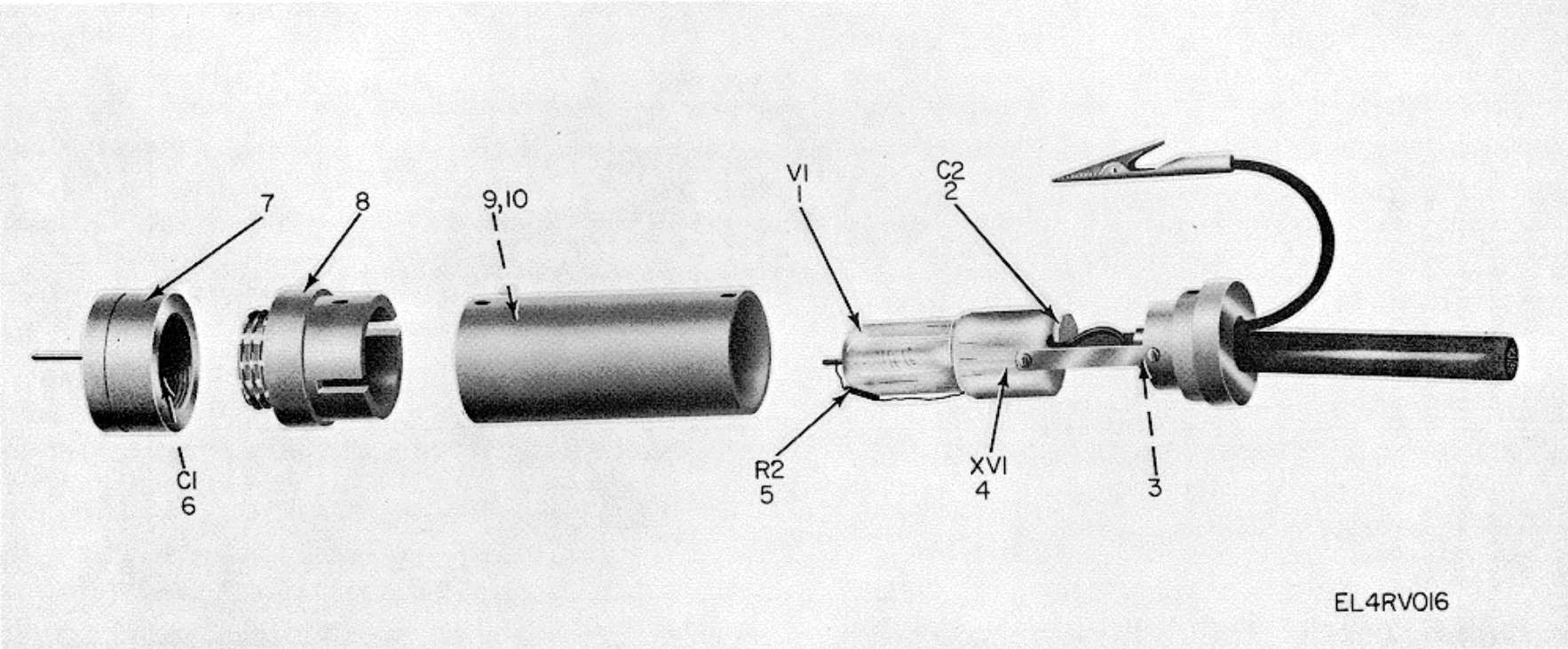

Figure 16. ME-26B, C, D/U Multimeters, AC Probe Disassembled.

(1) ILLUSTRATION (a) FIG NO.	(b) ITEM NO.	(2) SMR CODE	(3) NATIONAL STOCK NUMBER	(4) PART NUMBER	(5) FSCM	(6) DESCRIPTION	USABLE ON CODE	(7) U/M	(8) QTY INC IN UNIT
16	1	PAHZZ	5960-00-212-6019	2-01C	24289	ELECTRON TU8E	AE3,AF4,AXL	EA	1
16	2	PAHZZ	5910-00-821-5215	CK60AX471K	81349	CAPACITOR, FXD, CER	AE3,AE4,AXL	EA	1
16	3	PAHZZ	5940-00-675-586C	1855394	10001	TERMINAL, STANDOFF	AE3,AE4,AXL	EA	2
16	4	PAHZZ	5935-00-260-0516	TS102P01	81349	SOCKET. ELECTRON TUBE	AE3,AE4.AXL	EA	1
16	5	XDHZZ		RC09GF226J	81349	RESISTOR, FXD.CMPSN	AE3,AE4	EA	1
16	5	PAHZZ	5905-00-126-6703	RCR07G226J	41349	RESISTOR, FXD, CMPSN	AXL	EA	1
16	6	PAOZZ	5910-00-902-4190	658-010-242K	72182	CAPACITOR, FXD. MICA	AE3,AE4	EA	1
16	6	PAHZZ	5910-00-988-7311	M6TA18A003M	72982	CAPACITOR, FXD. TA	AXL	EA	1
16	7	PAOZZ	6625-00-898-7240	SMB339387	80063	PLUG, TIP	AE3,AE4,AXL	EA	1
16	8	PAHZZ	6625-00-087-6820	SMB339390	80063	PROBE, BAND	AE3,AE4,AXL	EA	1
16	9	PAHZZ	59700-0-087-2334	SMB339391	80063	INSULATOR, SLEEVE	AE3,AE4,AXL	EA	1
16	10	PAHZZ	5975-00-503-1440	62	76545	INSULATOR	AE3,AE4,AXL	EA	1

NATIONAL STOCK NUMBER AND PART NUMBER INDEX

NOTE: LATEST NATIONAL STOCK NUMBER AND PART NUMBER ASSIGNMENTS ARE INCLUDED AT END OF INDEX

STOCK NUMBER	FIG. NO.	ITEM NO.
5910-00-051-2217	15	4
6625-00-068-1739	1	6
5905-00-087-0560	11	13
5970-00-087-2334	16	9
6625-00-087-6820	16	8
5905-00-104-8345	13	6
5905-00-104-8345	14	4
5905-00-106-9344	13	14
5905-00-106-9344	14	13
5905-00-111-8372	13	3
5905-00-111-8372	14	16
5905-00-141-0720	13	7
5310-00-141-1815	12	3
6240-00-155-8706	3	2
5910-00-165-2753	10	9
5905-00-171-2004	8	7
5905-00-171-2004	12	21
5905-00-171-2006	14	5
5325-00-171-4680	2	14
5905-00-185-8516	13	5
6210-00-185-8779	3	3
5905-00-195-6449	13	13
5905-00-195-6449	14	9
5999-00-204-5206	2	4
5960-00-212-6019	15	2
5935-00-222-9828	8	11
5935-00-222-9828	12	6
5905-00-228-6088	11	5
6145-00-229-9862	2	7
5999-00-244-5150	5	12
5999-00-244-5150	10	11
5905-00-247-8722	13	4
6145-00-249-6781	2	8
5935-00-257-6870	7	2
5935-00-257-6870	10	15
5905-00-258-0794	5	6
5905-00-258-0794	10	16
5935-C0-260-0516	8	10
5935-C0-260-0516	16	4
5960-00-264-3004	10	6
5960-00-272-9182	5	10
5960-00-272-9182	10	7
5975-00-273-0788	5	14
5975-00-273-0788	10	12
5325-00-275-4480	2	13
5325-00-279-1235	12	13
5905-00-279-2295	14	15
5905-00-279-2510	14	3
5905-00-279-2626	13	11
5905-00-279-2657	9	1
5905-00-279-2657	14	8
5905-00-279-3418	14	10
5920-00-280-9328	10	10
5340-00-282-7966	12	4
6145-00-284-0579	1	11
6145-00-284-0579	2	11
5920-00-284-6804	10	10
5960-00-284-6893	5	17
5325-00-285-2012	2	1
6210-00-299-4099	3	1
621C-00-299-4099	4	3
6625-00-302-4909	1	8
6625-00-331-1471	2	6
5905-00-454-2801	13	1
5905-00-454-2875	13	8
5975-00-503-1440	16	10

STOCK NUMBER	FIG. NO.	ITEM NO.
5920-00-503-2882	5	11
5920-00-504-8634	5	11
5905-00-526-0493	8	1
5905-00-539-4231	7	7
5905-00-539-4231	12	5
5905-00-539-4971	11	12
5905-00-539-5437	11	11
5905-00-539-5955	11	15
5905-00-539-5556	6	7
5905-00-539-5956	9	5
5905-00-542-9116	11	14
5355-00-543-0789	4	1
5355-00-547-7996	3	5
6130-00-548-0757	11	2
5905-00-552-0561	6	2
5905-00-552-3893	11	9
5355-00-556-0145	4	2
6130-00-577-8470	8	14
5930-00-577-8675	12	12
5930-00-577-8676	12	15
5905-00-578-2551	12	9
5905-00-578-9129	12	9
5905-00-581-0449	12	22
5905-00-581-1405	6	1
6145-00-583-9268	2	3
5999-00-589-5213	15	6
6625-00-618-1766	2	5
5960-00-624-4718	5	8
5960-00-624-4718	10	8
6145-00-635-9338	1	2
5960-00-636-2218	5	1
5960-00-636-2218	10	1
5935-00-636-7145	1	10
5535-00-636-7145	2	9
5905-00-646-5763	9	7
5905-00-646-5763	15	5
6625-00-649-4958	5	4
5905-00-655-3414	6	4
5905-00-660-3641	6	1
6625-00-670-7580	10	4
5940-00-675-5860	16	3
5905-00-681-1077	8	2
5905-00-681-1079	8	4
5950-00-681-2563	10	17
5905-00-702-6278	6	2
5960-00-715-0790	5	7
5935-00-721-0124	11	1
5905-00-721-2632	6	9
5355-00-721-8924	3	7
5905-00-722-1458	6	4
5960-00-729-8150	10	2
5905-00-752-3834	12	11
5905-00-755-0643	6	8
5905-00-755-0643	9	6
5930-00-755-0765	11	8
5355-00-801-0470	3	4
5355-C0-803-4286	3	6
5905-00-807-7808	13	17
5905-00-807-7808	14	14
5910-00-816-4176	5	3
5940-00-816-8352	15	3
6625-00-821-2307	1	5
5330-00-821-2506	7	1
5910-00-821-5215	7	6
5910-00-821-5215	12	10
5910-00-821-5215	16	2
5910-00-822-5683	14	11
5910-00-822-5684	8	13
5910-00-8z2-5684	12	14
5910-00-823-1068	8	12
5910-00-823-1068	10	3
6625-00-825-6704	1	7
5961-00-828-9184	12	8
5340-00-844-3170	5	9
5935-00-845-1376	5	5
6250-00-845-8390	2	10
5340-00-846-8451	1	9
5340-00-846-8451	2	12

NATIONAL STOCK NUMBER AND PART NUMBER INDEX

STOCK NUMBER	FIG. NO.	ITEM NO.
5325-00-846-8452	5	15
5905-00-853-4862	7	4
5905-00-853-4863	7	3
5975-00-889-5118	10	14
5920-00-892-9311	5	13
5920-00-892-9311	10	13
5905-00-897-9658	13	15
6625-00-898-7240	16	7
6625-00-898-7270	1	3
6625-00-898-7270	2	2
6625-00-898-7270	15	1
5905-00-902-2887	9	2
5905-00-902-2887	11	10
5910-00-902-4190	16	6
5935-00-935-2231	12	7
5950-00-950-0524	5	16
5905-00-951-3363	9	8
5910-00-988-7311	16	6

PART NUMBER	FSCM	FIG. NO.	ITEM NO.
A3-25	72794	2	1
81618	70902	12	12
81619	70902	2	5
CE34C150R	81349	10	9
CK60AX471K	81349	7	6
CK60AX471K	81349	12	10
CK60AX471K	81349	16	2
CK62AW332M	81349	8	13
CK62AW332M	81349	12	14
CK62Y472Z	81349	8	12
CK62Y472Z	81349	10	3
CK63Y103Z	81349	14	11
CLA632-1	46384	12	2
CL632-1	24347	12	3
CP1-2-2-16	81349	8	1
CP1-2-216000	81349	6	6
CP1-2-216000	81349	12	18
CP1-2-684000	81349	6	5
CP1-2-684000	81349	12	19
CP1-2-900	81349	11	14
CP1-2-9000	81349	8	4
CP1-6-84	81349	8	2
C003MGF3-18-0330	81349	1	11
C003MGF3-18-0330	81349	2	11
C2350	88813	10	17
OCI-28	19101	9	2
OCI-28	19701	11	10
OC1-2C	19701	8	3
OCI-6-837	19701	11	15
CC2-21-63	00656	6	7
OC2-21-63	00656	9	5
DC2-46-74	00656	6	8
OC2-46-74	00656	9	6
028434	56289	5	3
FHN27U	81349	5	13
FHN27U	81349	10	13
FO201R508	81349	10	10
FO2GR7508	81349	10	10
GA3-200	72794	2	13
G74AC	28480	3	4
G74C	28480	3	7
G74J	28480	3	6
G74N	28480	3	5
LH50R2	81349	4	4
N591528-IK20	96906	4	2
NS91528-1N2D	96906	4	1
M6TA18A003M	72982	16	6
M6TAI1AC07M	71590	15	4
RA20AFK201A	81349	12	11
RA20LAS8250A	81349	6	9
RAO2LASB500A	81349	6	2
RA20LASBS01A	81349	6	1
RA2OLAS86R0A	81349	6	4
RA20NAFK102A	81349	12	9
RA20NASA500A	81349	6	2
RA2ONASAS01A	81349	6	1
RA20NASA6ROA	81349	6	4
RA20NASOIOIA	81349	12	22
RA20NASD201A	81349	12	11
RC09GF226J	81349	6	3
RC09GF226J	81349	16	5
RC20GF223J	81349	8	7
RC20GF223J	81349	12	21
RC2OGF271J	81349	14	5
RC20GF395J	81349	14	3
RC20GF565K	81349	9	1
RC20GF565K	81349	14	8
RC20GF681J	81349	8	9
RC32GF226J	81349	9	7
RC32GF226J	81349	15	5
RC32GF68IJ	81349	13	11
RC42GF103	81349	13	5
RC42GF472K	81349	13	13
RC42GF472K	81349	14	9
RG122U	81349	2	3
RN25X2163F	81349	11	11
RN70B1000F	81349	11	9
RN7082163F	81349	9	3
RN7586183F	81349	11	12
RS30S100H5S56	81349	8	14
SMB339387	80063	16	7
SMB339390	80063	16	8
SMB339391	80063	16	9
SMC200010	80063	10	4
SMC339386	80063	15	1
S3-175	72794	2	14
S3448	76385	12	13
TS102P01	81349	8	10
TS102P01	81349	16	4
TS102U03	81349	10	2
TS103C01	81349	8	11

PART NUMBER	FSCM	FIG. NO.	ITEM NO.
TS103C01	81349	12	6
TS103UO2	81349	10	6
UPI21M	81349	1	10
UPI21M	81349	2	9
U2130	76385	12	17
Y3986	76385	12	16
082WA	81349	5	8
O82WA	81349	10	8
0403-0004	28480	1	9
0403-0004	28480	2	12
1N253	81349	12	8
1120-0009	28480	5	4
120D5-63AHS	91506	5	7
1400-0005	28480	5	17
1400-0039	28480	5	9
1440-0002.	00837	1	1
1617	70902	12	15
1855394	10001	16	3
2M1	28520	10	14
2100-0020	28480	13	15
2100-0185	28480	9	8
26-015	99395	10	5
3100-0036	81349	7	3
31C0-0050	28480	7	4
313-250	75915	5	11
313-400	75915	5	11
319	83330	2	6
4SFIHIRV	84970	11	2
410821-95A	28480	1	8
410821-95C	28480	1	6
410821-95D	28480	1	5
410821-95t	28480	1	7

PART NUMBER	FSCM	FIG. NO.	ITEM NO.
410821K	28480	5	5
410821N	28480	15	6
410826	28480	13	17
410826	28480	14	14
410876M	72982	15	3
43852H5C	76854	11	8
44F16388	71785	11	1
45643H3AC	76854	11	7
47	24446	3	2
500	01538	5	15
51A12272	71785	7	2
51A12272	71785	10	11
56437	08474	7	5
58-41-0-63	94222	7	1
6-4	70563	5	6
6-4	70563	10	16
6-5-16	95987	12	4
6P1	28520	5	14
6P1	28520	10	12
6X4WA	81349	5	10
6X4W4	81349	10	7
60	76545	2	4
6109-12AU7	81349	5	1
6189-12AU7	81349	10	1
62	76545	16	11
658-010-242K	72982	16	6
6580202Y2K	72982	1	4
81-121	72619	3	3
81081	72619	3	1
81081	72619	4	3
81246	72619	2	11
8410	70903	1	2
8899BLACK	70903	2	7
8899RE0	70903	2	8
9100-0021	28480	5	16
9435-1-2	71400	5	12
9435-1-2	71400	10	11

LATEST NATIONAL STOCK NUMBER ASSIGNMENTS

STOCK NUMBER	FIG. NO.	ITEM NO.
5905-00-131-9992	14	2
5905-00-185-8516	14	12
5905-00-195-6791	8	9
5960-00-212-6019	16	1
5905-00-617-8014	12	22
5310-00-680-7669	12	2
5910-00-722-1552	5	2
5910-00-722-1552	11	6
5910-00-722-1552	14	6

LATEST PART NUMBER ASSIGNMENTS

PART NUMBER	FSCM	FIG. NO.	ITEM NO.
DD472	71590	5	2
DD472	71590	11	6
DD472	71590	14	6
RA20NASK101A	81349	12	22
RC20GF136JS	81349	14	2
RC42GF103J	81349	14	12
2-01C	24289	16	1

ADDITIONAL LATEST NATIONAL STOCK NUMBER ASSIGNMENTS

STOCK NUMBER	FIG. NO.	ITEM NO.
5905-00-104-8347	14	7
5905-00-106-1245	11	3
5905-00-106-1245	12	1
5905-00-106-1245	13	12
5905-00-106-9345	8	8
5905-00-106-9345	9	4
5905-00-126-6703	6	3
5905-00-126-6703	16	5
5905-00-141-4091	8	6
5905-00-141-05 91	12	20
5905-00-141-0720	13	16
5905-00-141-0720	14	1
5905-00-141-1071	13	10
5905-00-279-2528	13	9
5905-00-279-2528	14	15
5905-00-454-2812	13	2
5935-00-581-6400	11	4
5960-00-729-8150	10	2
5905-00-913-6315	9	9
5905-00-988-0149	8	5

ADDITIONAL LATEST PART NUMBER ASSIGNMENTS

PART NUMBER	FSCM	FIG. NO.	ITEM NO.
M12883-01-2	81349	12	7
RA20NASK102A	81349	12	9
RCR07G226JS	81349	6	3
RCR07G226JS	81349	16	5
RCR20G10IJS	81349	13	14
RCR20G101JS	81349	14	13
RCR20G103JS	81349	8	6
RCR20G103JS	81349	12	20
RCR20G474JS	81349	13	10
RCR20G560JS	81349	13	6
RCR20G560JS	81349	14	4
RCR20G683JS	81349	8	8
RCR20G683JS	81349	9	4
RCR32G101JS	81349	14	7
RCR32G136JS	81349	13	1
RCR32G180JS	81349	13	8
RCR32G222JS	81349	13	3
RCR32G222JS	81349	14	16
RCR32G271JS	81349	13	4
RCR32G272JS	81349	11	3
RCR32G272JS	81349	12	1
RCR32G272JS	81349	13	2
RCR32G330JS	81349	13	7
RCR32G330JS	81349	13	16
RCR32G330JS	81349	14	1
RCR32G331JS	81349	11	5
RCR32G395JS	81349	13	2
RC42GF390J	81349	14	10
RC42GF682J	81349	13	9
RC42GF682J	81349	14	15
RN70D2154F	81349	11	13
RN70D9092F	81349	8	5
RW30G502	81349	7	7
RW30G502	81349	12	5
SMC339386	81349	1	3
SMC339386	81349	2	2
111-19-21-025	71785	11	4
2-01C	24289	15	2
2100-0870	28480	9	9

By Order of the Secretary of the Army:

BERNARD W. ROGERS
General, United States Army
Chief of Staff

Official:

J. C. PENNINGTON
Brigadier General, United States Army
The Adjutant General

DISTRIBUTION:
Active Army
USAINSCOM (2)
COE (1)
TSG (1)
USAARENBD (1)
DARCOM (1)
TRADOC (2)
OS Maj Comd (4)
TECOM (2)
USACC (4)
MDW (1)
Armies (2)
Corps (2)
USMA (2)
Svc Colleges (1)
USASIGS (5)
USAADS (2)
USAFAS (2)
USAARMS (2)
USAIS (2)
USAES (2)
USAICS (3)
MAAG (1)
USARMIS (1)
USAERDAA (1)
USAERDAW (1)
USACC-EUR (2)
Fort Gillem (10)
Fort Gordon (10)
Fort Huachuca (10)
Fort Carson (5)
Ft Monmouth (HISA) (33)
Ft Richardson (CERCOM) (2)
Army Dep (1) except
LBAD (14)
SAAD (30)
TOAD (14)
SHAD (3)
USA Dep (1)
Sig Sec USA Dep (1)
Units org under fol TOE:
(1 cy each unit) UNOINDC
1-128
1-207
6-100
6-115
6-116
6-155
6-156
6-165
6-166
6-175
6-176
6-185
6-186
6-200
6-201
6-300
6-302
6-365
6-366
6-425
6-426
6-435
6-436
6-455
6-456
6-575
6-576
6-577
6-615
6-616
7
7-100
7-157
11-15
11-16
11-17
11-19
11-35
11-37
11-38
11-39
11-117
11-127
11-137
11-215
11-216
11-225
11-226
11-327
11-347
11-357
11-367
11-368
11-377
11-500 (AA-AC)
17
7-100
29-1
29-11
29-15
29-16
29-17
29-21
29-25
29-26
29-27
29-35
29-36
29-37
29-51
29-55
29-56
29-57
29-75
29-79
29-102
29-105
29-109
29-134
29-139
29-245
29-247
29-427
30-34
31-105
32-57
32-87
32-97
32-500
37
37-100
39-401
44-2
44-8
44-12
44-236
44-255
44-256
44-535
44-536
44-537
44-545
44-546
44-547
55-89
55-99
55-157
55-457
55-458
57
57-100
57-102
67
77-100
77-102
29-207 (2)
29-610 (2)

NG: State AG (3); Units-Same as Active Army
USAR: None
For explanation of abbreviations used, see AR 310-50.

*** U. S. GOVERNMENT PRINTING OFFICE : *1990 290-483 (56/27)***

RECOMMENDED CHANGES TO EQUIPMENT TECHNICAL PUBLICATIONS

THEN. . JOT DOWN THE DOPE ABOUT IT ON THIS FORM, CAREFULLY TEAR IT OUT, FOLD IT AND DROP IT IN THE MAIL!

SOMETHING WRONG WITH THIS PUBLICATION?

FROM: (PRINT YOUR UNIT'S COMPLETE ADDRESS)

DATE SENT

PUBLICATION NUMBER	PUBLICATION DATE	PUBLICATION TITLE

BE EXACT. . .PIN-POINT WHERE IT IS

PAGE NO.	PARA-GRAPH	FIGURE NO	TABLE NO.

IN THIS SPACE TELL WHAT IS WRONG AND WHAT SHOULD BE DONE ABOUT IT:

PRINTED NAME, GRADE OR TITLE, AND TELEPHONE NUMBER

SIGN HERE:

DA FORM 1 JUL 79 2028-2

PREVIOUS EDITIONS ARE OBSOLETE.

P.S.—IF YOUR OUTFIT WANTS TO KNOW ABOUT YOUR RECOMMENDATION MAKE A CARBON COPY OF THIS AND GIVE IT TO YOUR HEADQUARTERS.

TEAR ALONG PERFORATED LINE

PIN : 019405-000