SECTION 7 BLOCK DIAGRAM

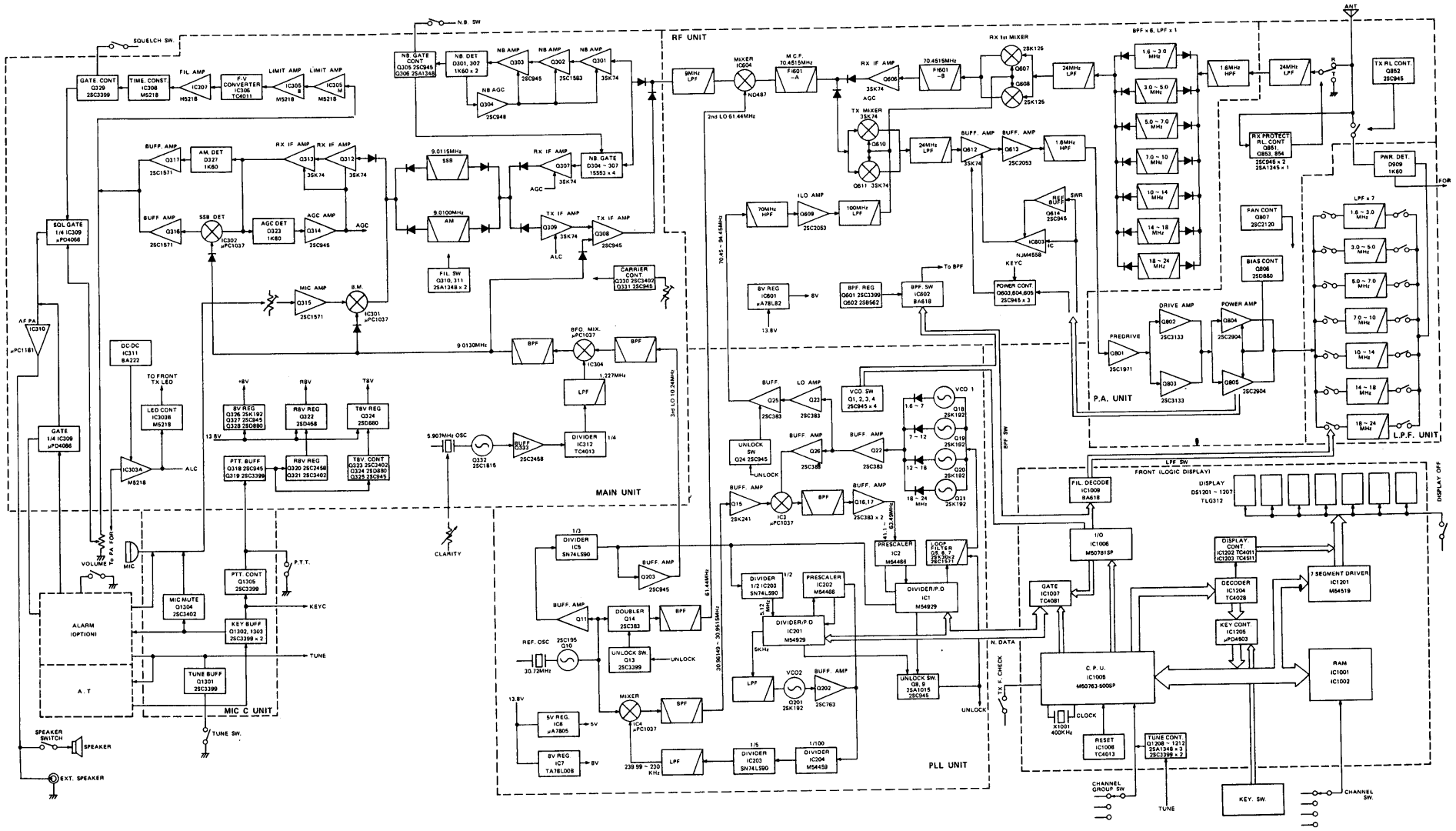

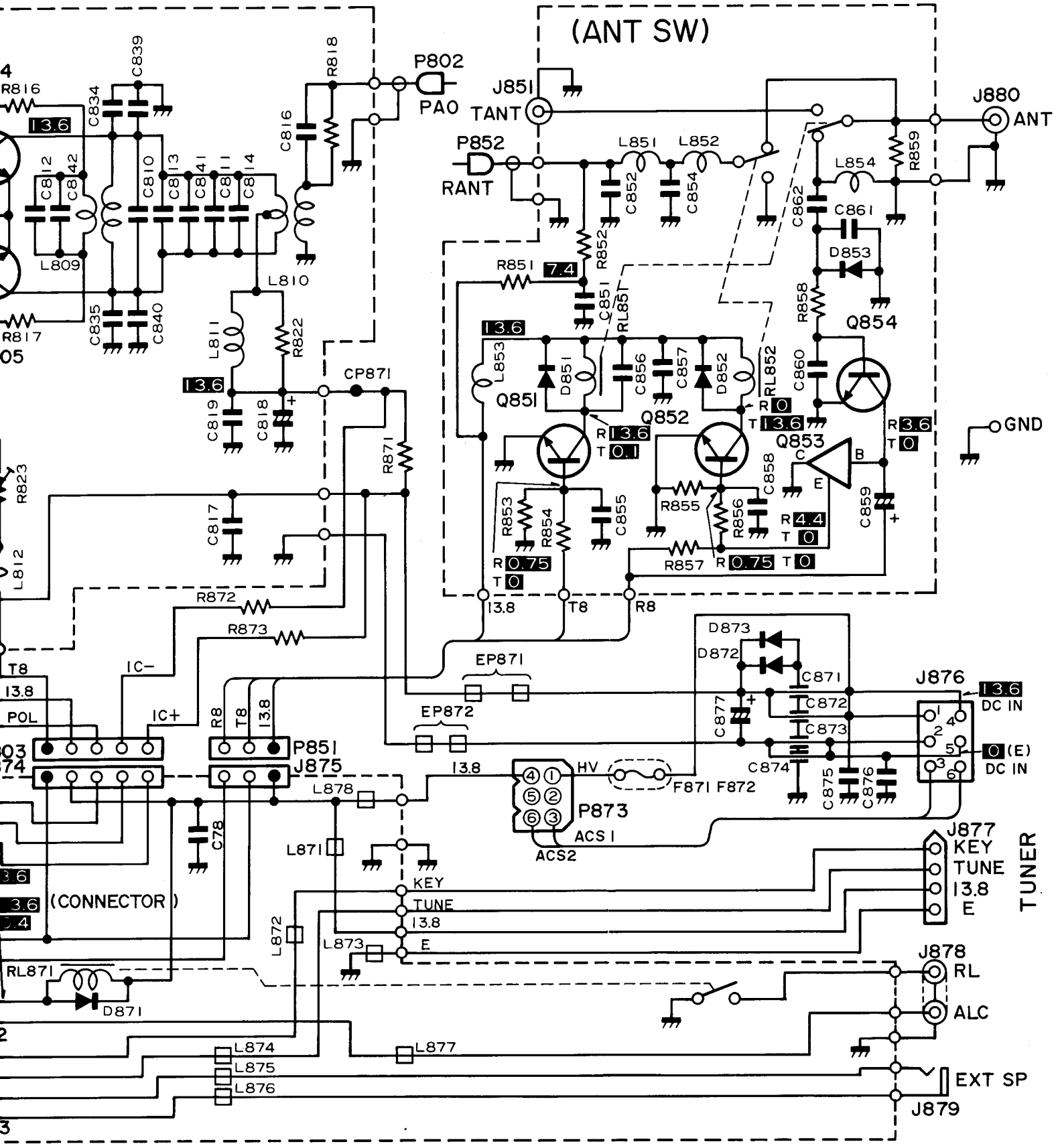
(ANT SW)
P802
PA0
J851
TANT
P852
RANT
J880
ANT
GND
L851
L852
L854
R859
C852
C854
C862
C861
D853
R852
R851
7.4
C851
RL851
R858
Q854
L853
D851
C856
C857
D852
RL852
C860
Q851
Q852
Q853
R853
R854
C855
R855
R856
C858
C859
R857
R872
R873
EP871
EP872
D873
D872
C871
C872
C873
C874
C875
C876
C877
J876
DC IN
(E)
P851
J875
P873
HV
F871 F872
ACS1
ACS2
L878
L871
C78
KEY
TUNE
13.8
E
J877
TUNER
(CONNECTOR)
L872
L873
RL871
D871
J878
RL
ALC
L874
L875
L876
L877
EXT SP
J879
IC−
IC+
POL
T8
R8
CP871
R871
C817
C819
C818
L811
R822
L810
C835
C840
R817
R816
C834
C839
C812
C842
C810
C813
C841
C811
C814
C816
R818
L809
L812
R823