PRICE $2.00

BENTON HARBOR, MICHIGAN

HEATH COMPANY

HEATHKIT®
ASSEMBLY MANUAL

HEATHKIT

SSB RECEIVER
MODEL SB-301

Copyright © 1966
Heath Company
All rights reserved

595-946-01
11-29-68

TYPICAL COMPONENT TYPES

This chart is a guide to commonly used types of electronic components. The symbols and related illustrations should prove helpful in identifying most parts and reading the schematic diagrams.

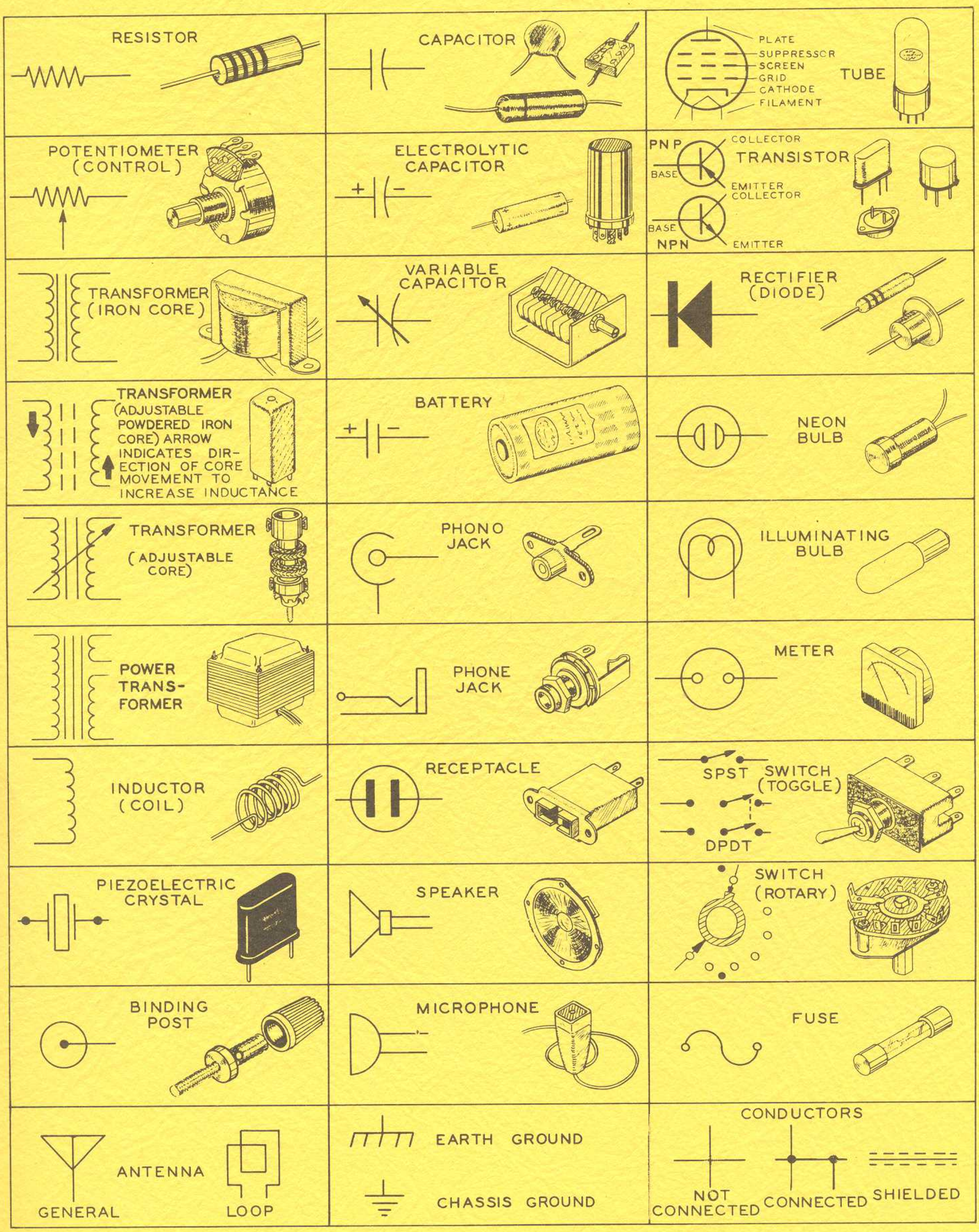

Assembly and Operation

of the

HEATHKIT®

SSB RECEIVER

Model SB-301

HEATH COMPANY
BENTON HARBOR, MICHIGAN 49022

TABLE OF CONTENTS

INTRODUCTION. 3

UNPACKING INSTRUCTIONS. 4

CIRCUIT BOARDS
Parts List #1 - IF Circuit Board. 5
Step-By-Step Assembly. 6
Parts List #2 - RF Circuit Board. 11
Step-By-Step Assembly. 12

CHASSIS ASSEMBLY
Parts List #3. 15
Step-By-Step Assembly. 17

BOTTOM CHASSIS WIRING
Parts List #4. 35
Step-By-Step Assembly. 36

TOP CHASSIS WIRING
Parts List #5. 53
Step-By-Step Assembly. 55

INITIAL TEST. 65

ALIGNMENT. 67
Alignment with 100 kHz Crystal Calibrator. 69
Optional Alignment Using Signal Generator. 71

FINAL ASSEMBLY. 72

INSTALLATION. 73

OPERATION. 75
VOLTAGE AND RESISTANCE CHARTS. . . (fold-out from page). 77

IN CASE OF DIFFICULTY. 77
Troubleshooting Chart. 78

CHASSIS PHOTOGRAPHS. . (fold-out from page). 78

SPECIFICATIONS. 83

CIRCUIT DESCRIPTION. 87

CIRCUIT BOARD X-RAY VIEWS. 92

SCHEMATIC. . . (fold-out from page). 95

REPLACEMENT PARTS PRICE LIST. 96

INTRODUCTION

The Heathkit Model SB-301 Receiver is capable of receiving SSB, AM, CW, and RTTY signals on all amateur bands from 3.5 to 30 megahertz*. Separate AM and CW crystal filters can be obtained. These crystal filters are switch selected from the front panel for these modes of operation to assure optimum selectivity and performance. If these optional filters are not obtained, AM signals are received using the exalted carrier method, and CW may be received in either SSB mode.

The preassembled, prealigned LMO (linear master oscillator) and crystal-controlled heterodyne oscillators assure highly accurate and stable operation. The use of circuit boards and a wiring harness provide a clean chassis layout.

Other features of this Receiver are special antenna and power connections for VHF converters, a 100 kilohertz crystal calibrator, provisions for 15 MHz WWV reception, for transceiver operation with the SB-401 companion Transmitter, and a smooth, virtually backlash-free, dial tuning mechanism. The transformer-operated silicon diode power supply is a long-life, low-heat power source.

*This Manual uses the new IEEE (Institute of Electrical and Electronic Engineers) international standard term "hertz" as the basic unit of frequency. The terms are used as follows:

Hz (hertz) = cps (cycles per second).
kHz (kilohertz) = kc (kilocycles per second).
MHz (megahertz) = mc (megacycles per second).

NOTE: Refer to Page 4 of this Manual for complete unpacking instructions. Use the "Kit Builders Guide" for information on parts identification, tools, wiring, soldering, and step-by-step assembly procedures.

UNPACKING INSTRUCTIONS

The Receiver packaging consists of the large shipping carton, which contains smaller packages, and a number of loose parts. Some of the smaller packages have numbers 1 through 4 on them. After these four numbered packages have been removed from the large carton, the remaining parts will be considered to be package #5.

Package #5 consists mainly of items too large to fit into the small packages, and those items used in a number of the assembly sections, such as the large metal parts.

You will be directed to open each of these packages as they are needed. Each of the five assembly sections of the Manual contains its own Parts List and Step-By-Step Assembly instructions. At the beginning of each Parts List you will be told which numbered package to open. You will also be directed to remove the parts from package #5 that are required to complete that assembly section.

NOTE: To avoid intermixing parts, do not open any of the parts packs until directed to do so at the beginning of one of the Parts Lists. Any part that is packaged in an individual envelope with a part number on it should be placed back in its envelope, after it is identified, until that part is called for in a step.

CIRCUIT BOARDS

This section of the Manual contains a separate Parts List and separate Step-By-Step Assembly instructions for each of the two circuit boards to be assembled.

IF CIRCUIT BOARD

Parts List #1

Unpack package #1 and check each part against the following Parts List. The numbers in parentheses are keyed to the numbers in the Parts Pictorial.

PART No.	PARTS Per Kit	DESCRIPTION
RESISTORS - 1/2 Watt		
(1) 1-2	2	68 Ω (blue-gray-black)
1-3	1	100 Ω (brown-black-brown)
1-6	1	470 Ω (yellow-violet-brown)
1-9	4	1000 Ω (brown-black-red)
1-90	1	2000 Ω 5% (red-black-red)
1-16	1	4700 Ω (yellow-violet-red)
1-24	1	33 KΩ (orange-orange-orange)
1-25	1	47 KΩ (yellow-violet-orange)
1-60	1	68 KΩ (blue-gray-orange)
1-26	2	100 KΩ (brown-black-yellow)
1-31	2	330 KΩ (orange-orange-yellow)
1-33	2	470 KΩ (yellow-violet-yellow)

PART No.	PARTS Per Kit	DESCRIPTION
CAPACITORS		
(2) 20-97	1	50 pf mica
(3) 21-78	2	5 pf disc
21-56	1	470 pf disc
21-14	2	.001 μfd disc
21-16	11	.01 μfd disc
(4) 27-34	1	.2 μfd resin
(5) 28-2	1	1 pf phenolic (brown-black-white)

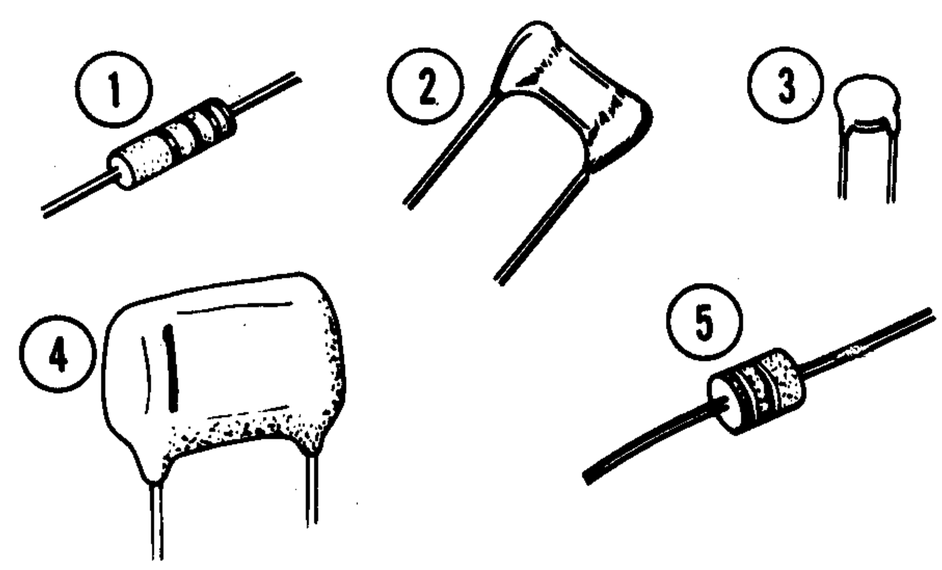

PART No.	PARTS Per Kit	DESCRIPTION
GENERAL		
(6) 52-71	2	IF transformer
(7) 56-26	1	1N191 crystal diode (brown-white-brown)
56-24	2	1N458 silicon diode (yellow-green-gray)
56-28	2	S-187 silicon diode
74-4	1	Electrical tape
(8) 75-56	1	Mica insulating washer
(9) 434-129	2	7-pin tube socket
434-130	1	9-pin tube socket
85-119-1	1	Noise limiter circuit board
85-153-3	1	IF circuit board
		Solder
ITEMS FROM PACK #5		
597-308	1	Kit Builders Guide
597-260	1	Parts Order Form
597-367	1	Registration card
595-946	1	Manual

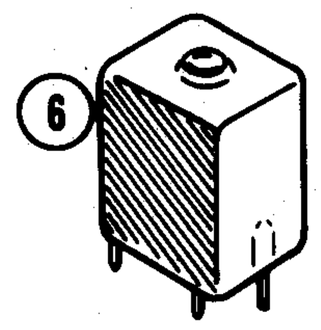

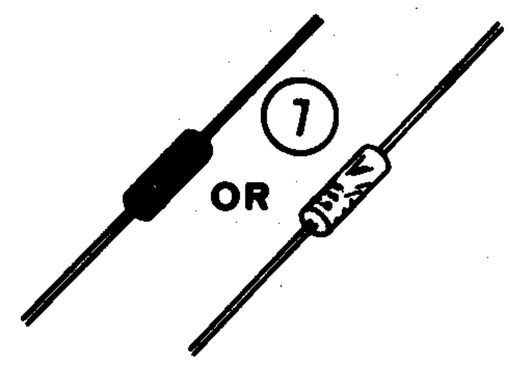

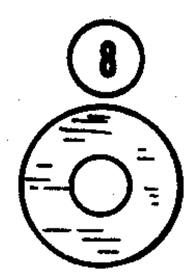

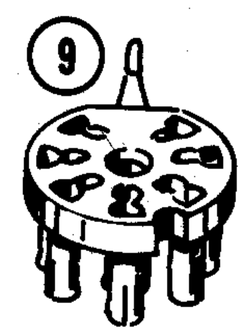

STEP-BY-STEP ASSEMBLY

Before starting to assemble this kit, review the circuit board wiring and soldering instructions in the Kit Builders Guide.

Use 1/2 watt resistor unless directed otherwise in a step. All resistors will be called out by only the resistance value (in Ω, KΩ, or megohm) and color code. Capacitors will be called out by the capacitance value and type.

When a circuit board is finished, set it aside until it is called for later in the assembly sequence.

Position the IF circuit board (#85-153-1) lettered side up as shown in Pictorial 1-1. Complete each step on Pictorials 1-1, 1-2, 1-3, 1-4, and 1-5.

START

( ) 100 KΩ (brown-black-yellow).

( ) 470 Ω (yellow-violet-brown).

( ) 470 KΩ (yellow-violet-yellow).

( ) 68 KΩ (blue-gray-orange).

( ) 1000 Ω (brown-black-red).

( ) 1000 Ω (brown-black-red).

( ) 1000 Ω (brown-black-red).

( ) 100 Ω (brown-black-brown).

( ) 33 KΩ (orange-orange-orange).

( ) 68 Ω (blue-gray-black).

( ) Solder all connections and cut off excess leads.

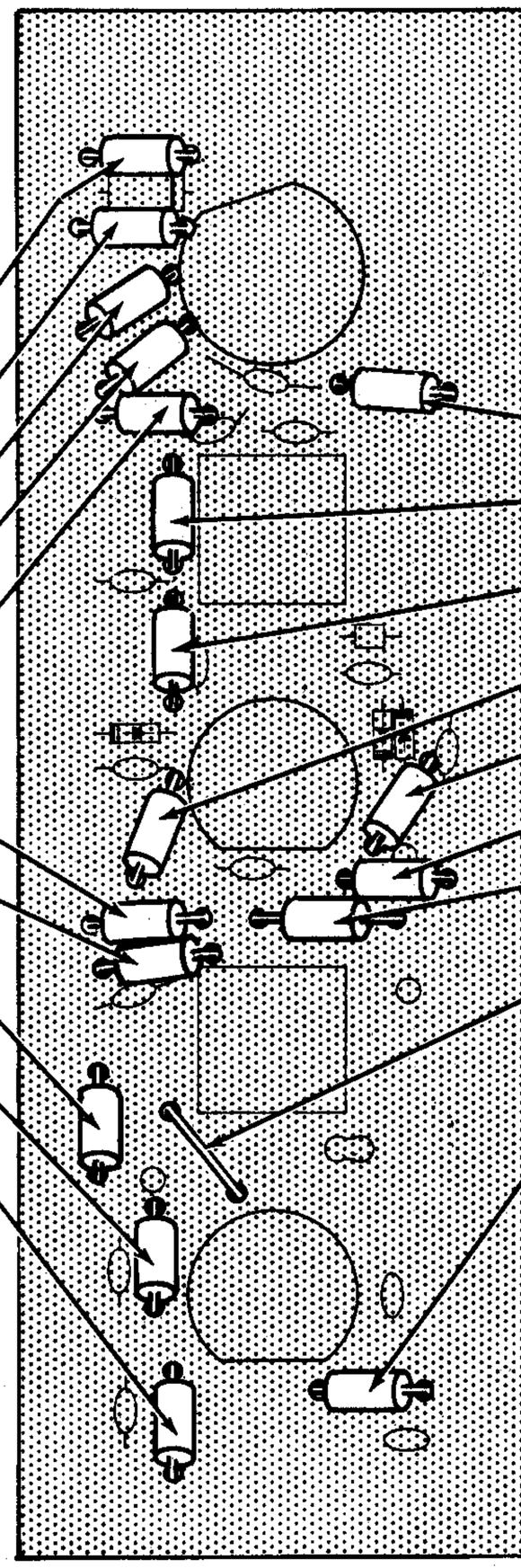

CONTINUE

( ) 330 KΩ (orange-orange-yellow).

( ) 47 KΩ (yellow-violet-orange).

( ) 330 KΩ (orange-orange-yellow).

( ) 1000 Ω (brown-black-red).

( ) 4700 Ω (yellow-violet-red).

( ) 100 KΩ (brown-black-yellow).

( ) 68 Ω (blue-gray-black).

( ) 1-1/4" bare wire. Use a cut-off resistor lead.

( ) 2000 Ω (red-black-red).

( ) Solder all connections and cut off excess leads.

PROCEED TO PICTORIAL 1-2.

PICTORIAL 1-1

HEATHKIT

START

( ) .01 μfd disc.

( ) 470 pf disc.

( ) 5 pf disc.

( ) Prepare a diode-resistor combination as shown. Use a 1N[illegible] crystal diode (brown-white-brown) and a 470 KΩ resistor (yellow-violet-yellow). After soldering, cut off the excess resistor leads.

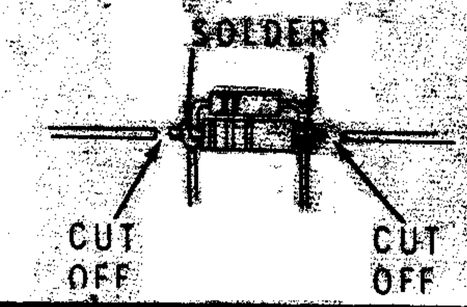

NOTE: When installing crystal or small silicon diodes, be sure to position the banded end as shown.

( ) Install the diode-resistor combination. Position the banded end of the diode as shown.

( ) .01 μfd disc.

( ) .01 μfd disc.

( ) .01 μfd disc.

( ) .01 μfd disc.

( ) Solder all connections and cut off excess leads.

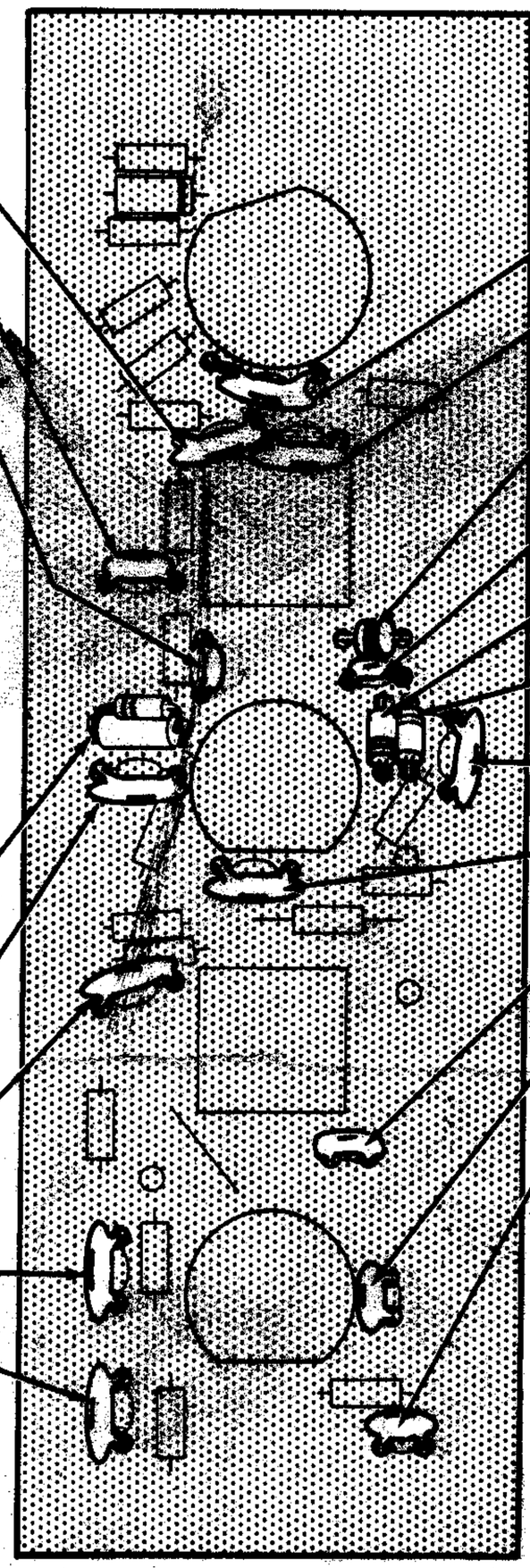

CONTINUE

( ) .01 μfd disc.

( ) .01 μfd disc.

( ) 1 pf phenolic (brown-black-white).

( ) 5 pf disc.

( ) Silicon diode (yellow-green-gray). Note banded end.

( ) Silicon diode (yellow-green-gray). Note banded end.

( ) .01 μfd disc.

( ) .01 μfd disc.

( ) 50 pf mica.

( ) .001 μfd disc.

( ) .001 μfd disc.

( ) Solder all connections and cut off excess leads.

PROCEED TO PICTORIAL 1-3.

PICTORIAL 1-2

START

NOTE: Solder the connections of each part as it is installed.

( ) Solder the center pin to the ground clip on all the 7 and 9-pin tube sockets before they are mounted.

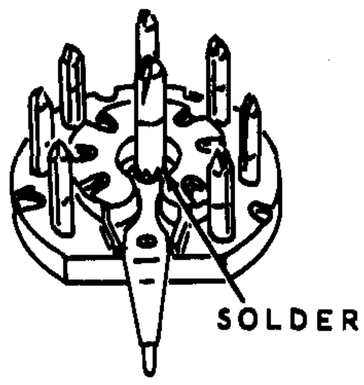

NOTE: When soldering the tube sockets to the circuit boards, the first application of solder will tend to flow into the pins. After applying the first layer of solder to a pin, allow it to cool; then apply a second layer using only enough heat to permit the solder to flow over the end of the pin and onto the foil of the circuit board.

( ) Install a 9-pin tube socket at V10.

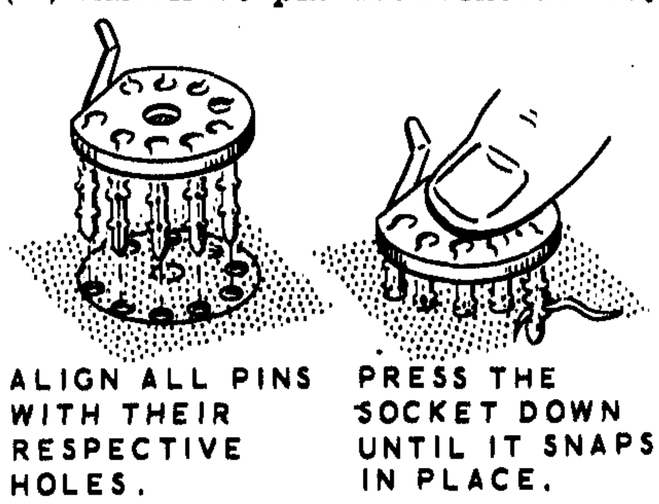

( ) Install 7-pin tube sockets at V6 and V7.

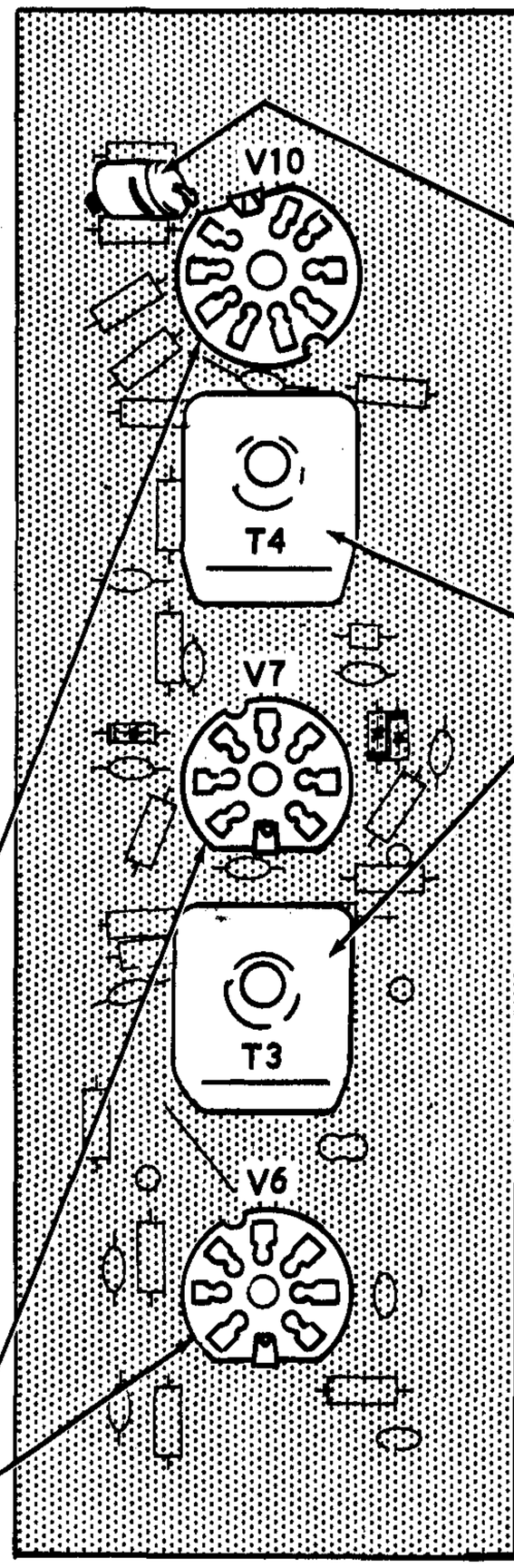

CONTINUE

NOTE: When installing Mylar capacitors having a banded end, position the banded end as shown.

( ) .2 μfd resin. Note banded end.

( ) Install IF transformers (#52-71) at T3 and T4. Do not solder pins X and Y of transformer T4 at this time.

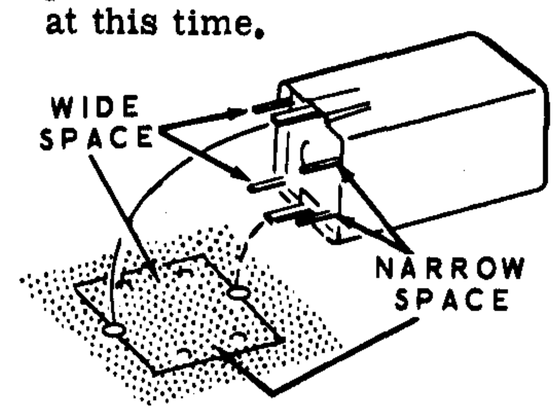

( ) Check to see that all connections except pins X and Y of T4 are are soldered.

FINISH

PROCEED TO PICTORIAL 1-4.

PICTORIAL 1-3

START

( ) Locate the noise limiter circuit board (#85-119-1) and position it lettered side up as shown.

( ) .01 μfd disc.

( ) .01 μfd disc.

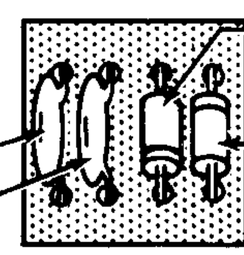

CONTINUE

( ) Silicon diode (#56-28). Note banded end.

( ) Silicon diode (#56-28). Note banded end.

( ) Solder all connections and cut off excess leads.

PROCEED TO PICTORIAL 1-5.

PICTORIAL 1-4

START

( ) Tape a mica insulating washer on the foil side of the IF circuit board as shown in the inset drawing.

( ) Position the X and Y foils of the noise limiter circuit board against the corresponding X and Y pins that extend from the foil side of the IF circuit board, at T4. While holding the noise limiter circuit board perpendicular to the IF circuit board, solder the two connections. Be sure the mica washer stays in place to prevent a short circuit between the noise limiter circuit board and the ground foil of the IF circuit board.

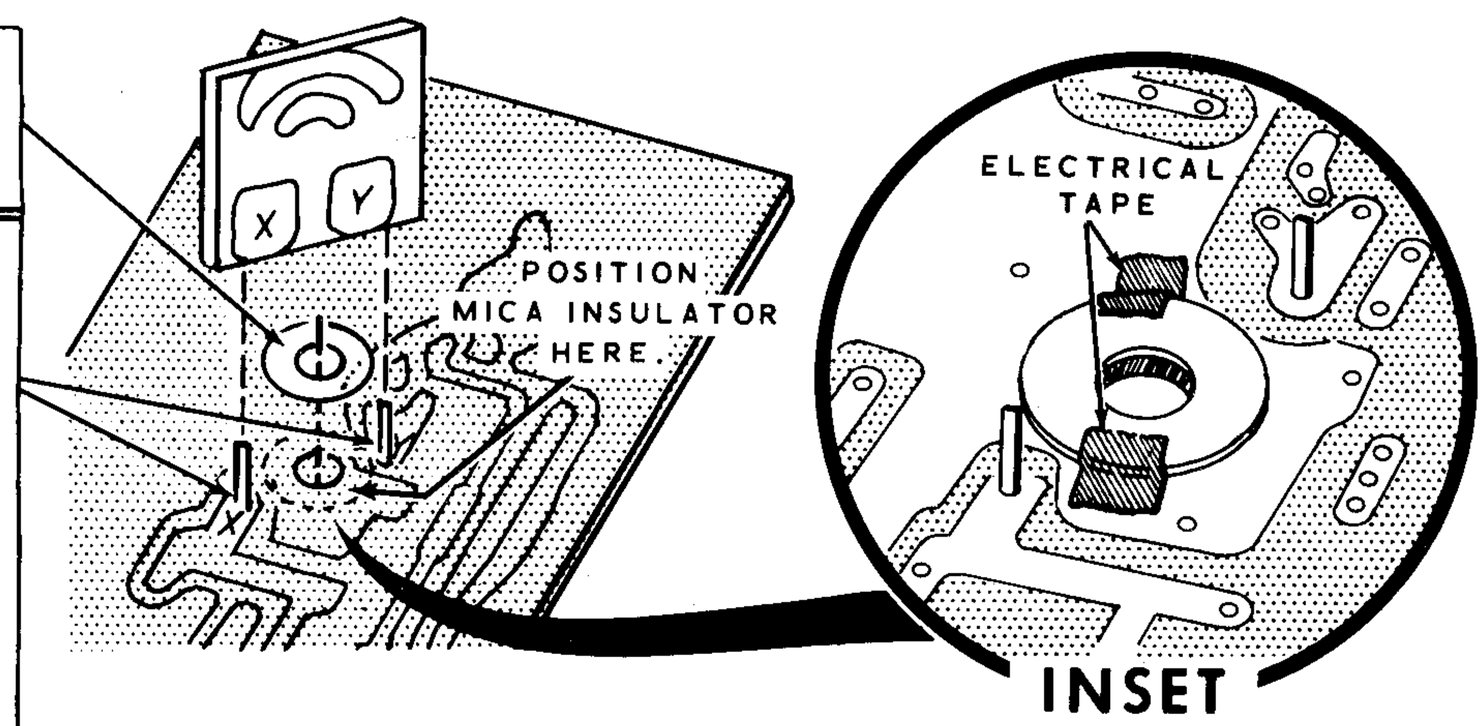

FINISH

PROCEED TO PAGE 11.

PICTORIAL 1-5

RF CIRCUIT BOARD

Parts List #2

Unpack package #2 and check each part against the following Parts List. The numbers in parentheses are keyed to the numbers in the Parts Pictorial. Parts that have been shown in a previous Parts Pictorial will not be repeated in this Parts Pictorial.

PART No.	PARTS Per Kit	DESCRIPTION
RESISTORS - 1/2 Watt		
1-3	1	100 Ω (brown-black-brown)
1-66	1	150 Ω (brown-green-brown)
1-9	10	1000 Ω (brown-black-red)
1-90	1	2000 Ω 5% (red-black-red)
1-23	1	27 KΩ (red-violet-orange)
1-25	1	47 KΩ (yellow-violet-orange)
1-26	5	100 KΩ (brown-black-yellow)
1-33	2	470 KΩ (yellow-violet-yellow)
CAPACITORS		
20-130	1	12 pf mica
20-97	1	50 pf mica
20-105	1	180 pf mica
21-78	1	5 pf disc
21-14	2	.001 μfd disc
21-16	21	.01 μfd disc
28-1	1	2.2 pf phenolic (red-red-white)
(1) 31-36	1	8-50 pf trimmer

PART No.	PARTS Per Kit	DESCRIPTION
GENERAL		
(2) 52-65	1	IF bandpass transformer
(3) 250-34	1	4-40 x 1/2" screw
(4) 252-15	1	4-40 nut
(5) 254-9	1	#4 lockwasher
(6) 434-74	1	Crystal socket
434-129	5	7-pin tube socket
(7) 436-11	1	Banana jack with nut
85-72-1	1	RF circuit board
490-5	1	Nut starter (See Page 3 of the Kit Builders Guide.)

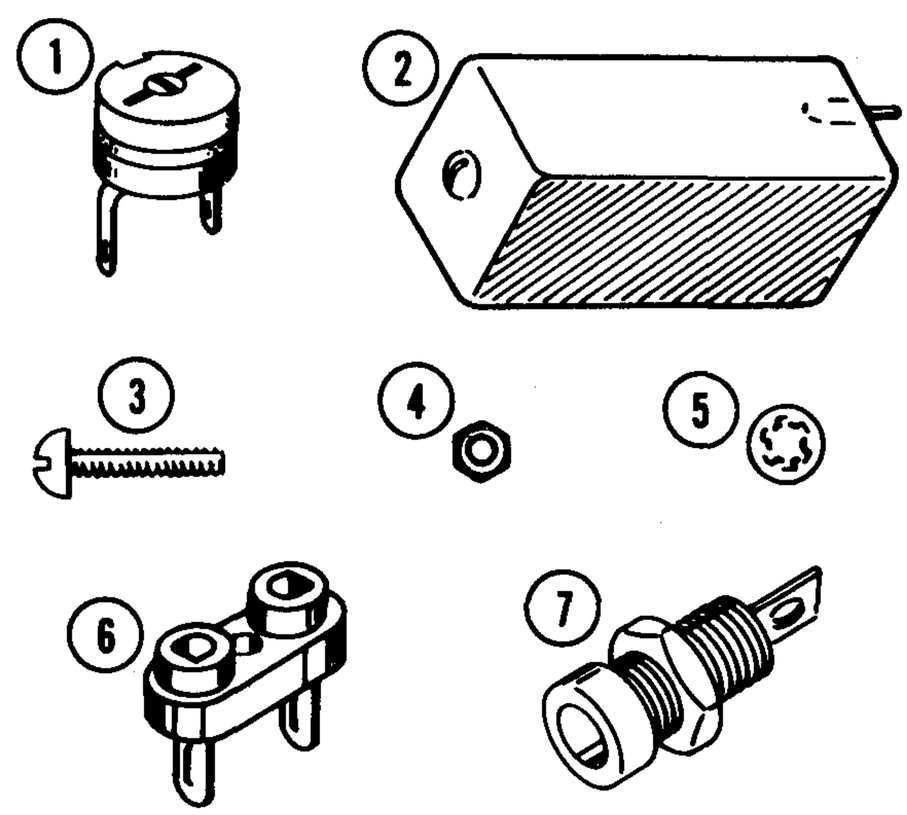

STEP-BY-STEP ASSEMBLY

Position the RF circuit board (#85-72-1) lettered side up as shown in Pictorial 2-1. Complete each step on Pictorials 2-1, 2-2, and 2-3.

DO NOT CUT THIS LEAD OFF. IT WILL BE USED LATER.

START

( ) 100 KΩ (brown-black-yellow). Do not cut off the indicated lead of the resistor.

( ) 100 KΩ (brown-black-yellow).

( ) 1000 Ω (brown-black-red).

( ) 1000 Ω (brown-black-red).

( ) 47 KΩ (yellow-violet-orange).

( ) 470 KΩ (yellow-violet-yellow).

( ) 150 Ω (brown-green-brown).

( ) 470 KΩ (yellow-violet-yellow).

( ) 1000 Ω (brown-black-red).

( ) 27 KΩ (red-violet-orange).

( ) 100 KΩ (brown-black-yellow).

( ) Solder all connections and cut off excess leads except the indicated resistor lead.

CONTINUE

( ) 1000 Ω (brown-black-red).

( ) 1000 Ω (brown-black-red).

( ) 2000 Ω (red-black-red).

( ) 100 Ω (brown-black-brown).

( ) 1000 Ω (brown-black-red).

( ) 1000 Ω (brown-black-red).

( ) 100 KΩ (brown-black-yellow).

( ) 1000 Ω (brown-black-red).

( ) 100 KΩ (brown-black-yellow).

( ) 1000 Ω (brown-black-red).

( ) 1000 Ω (brown-black-red).

( ) Solder all connections and cut off excess leads.

PROCEED TO PICTORIAL 2-2.

PICTORIAL 2-1

START

( ) .01 μfd disc.
( ) .01 μfd disc.
( ) .01 μfd disc.
( ) .01 μfd disc.
( ) .01 μfd disc.
( ) .01 μfd disc.
( ) .01 μfd disc.
( ) .01 μfd disc.
( ) .01 μfd disc.
( ) .001 μfd disc.
( ) .001 μfd disc.
( ) .01 μfd disc.
( ) 180 pf mica.
( ) .01 μfd disc.
( ) 2.2 pf phenolic (red-red-white).
( ) Solder all connections and cut off excess leads.

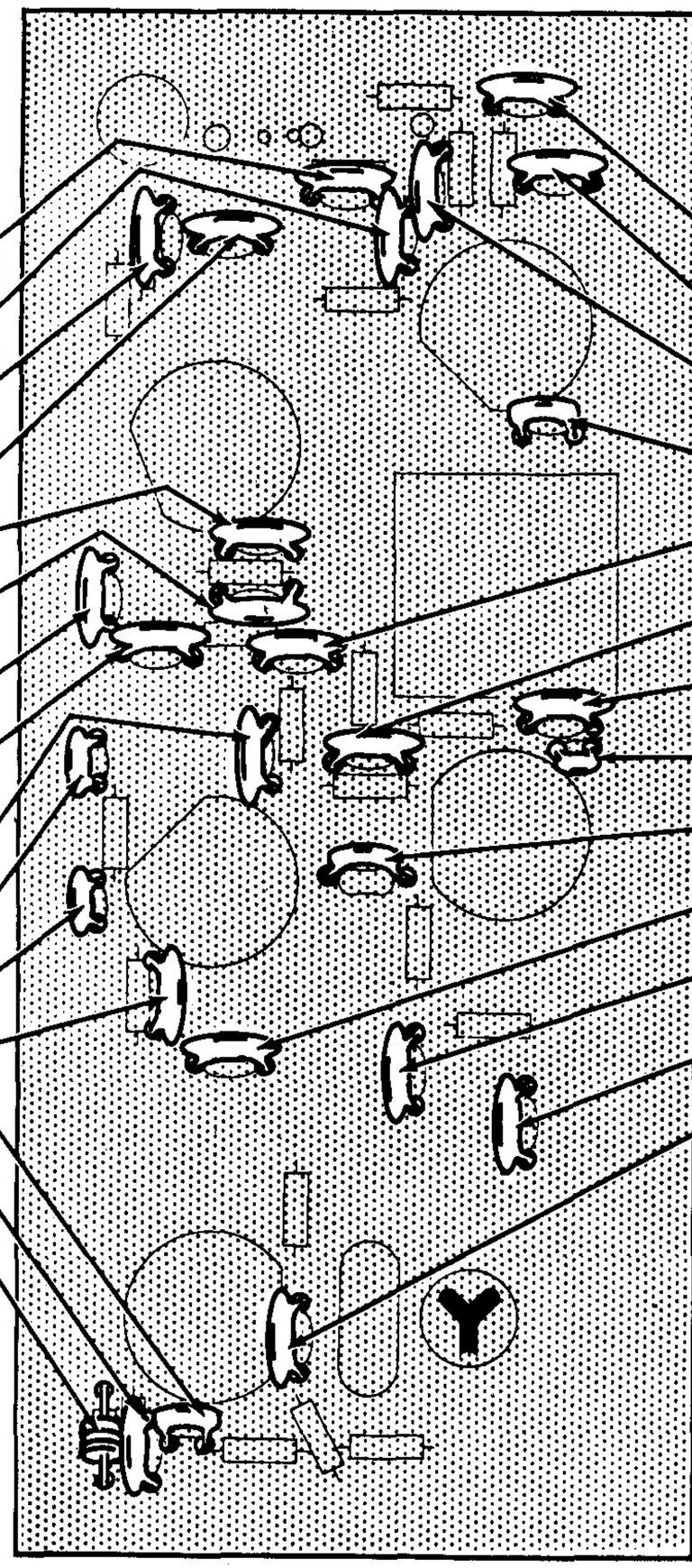

CONTINUE

( ) .01 μfd disc.
( ) .01 μfd disc.
( ) .01 μfd disc.
( ) 12 pf mica.
( ) .01 μfd disc.
( ) .01 μfd disc.
( ) .01 μfd disc.
( ) 5 pf disc.
( ) 50 pf mica.
( ) .01 μfd disc.
( ) .01 μfd disc.
( ) .01 μfd disc.
( ) .01 μfd disc.
( ) Solder all connections and cut off excess leads.

PROCEED TO PICTORIAL 2-3.

PICTORIAL 2-2

PARTS PICTORIAL

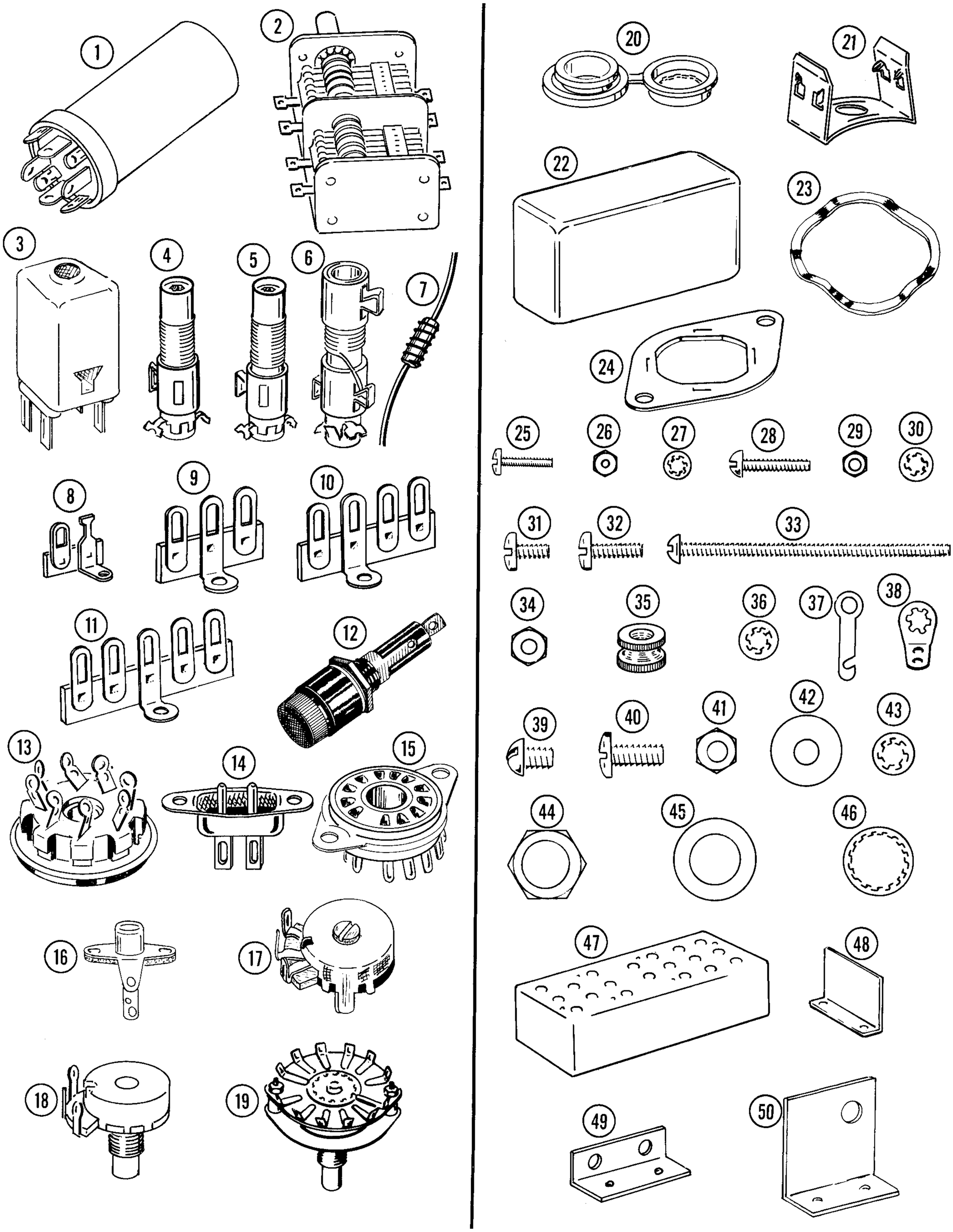

START

NOTE: Solder all connections of each part as it is installed.

( ) Install 7-pin tube sockets at V1, V2, V3, V4, and V8.

( ) Install the banana jack at A. Use the nut supplied with the jack, and position it as shown by the dotted line.

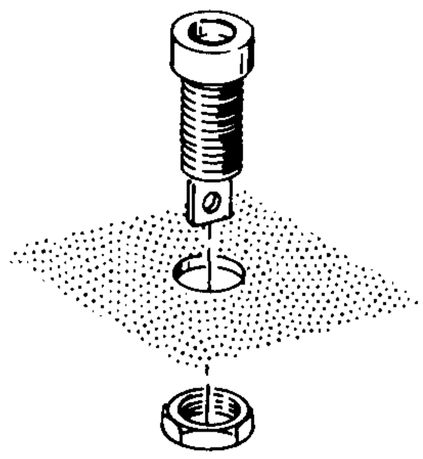

( ) Mount the crystal socket. Use a 4-40 x 1/2" screw, #4 lockwasher, and a 4-40 nut. Do not overtighten the hardware, as the socket may break. Bend the lugs over against the foil before soldering.

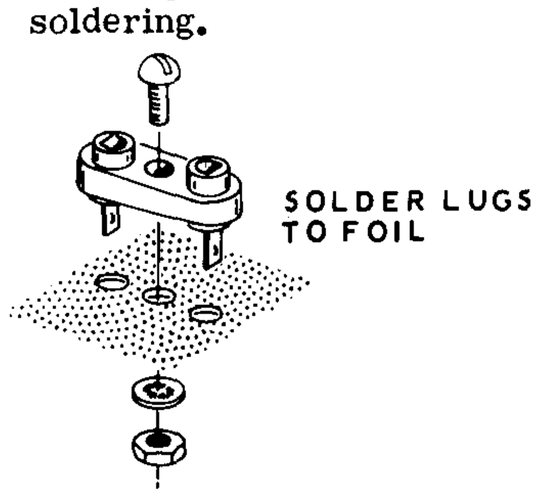

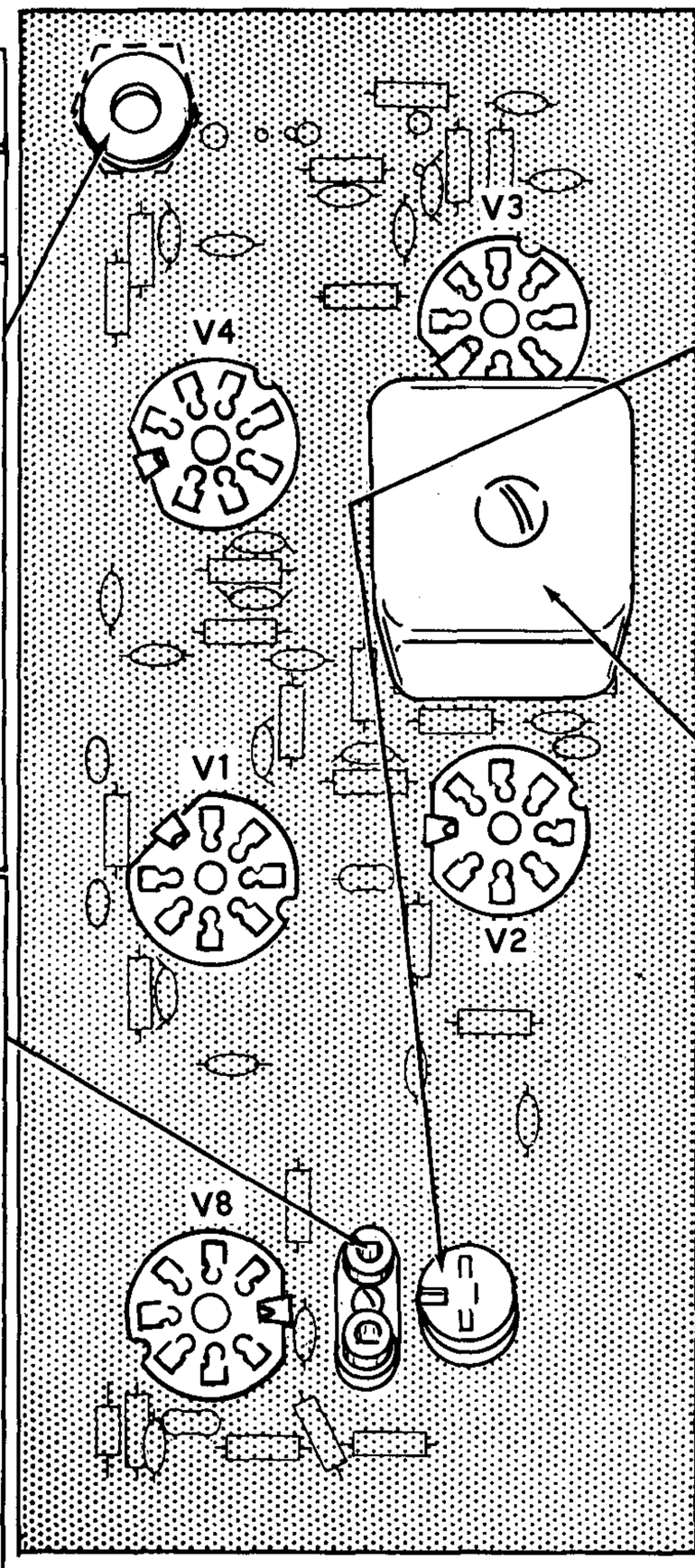

CONTINUE

( ) 8-50 pf trimmer. Position the "Y" lug as shown. Solder the lugs to the foil by bridging the solder between the lugs and foil.

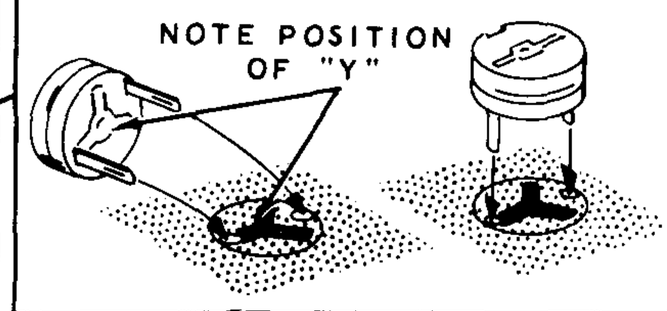

( ) Band pass filter (#52-65) at T2.

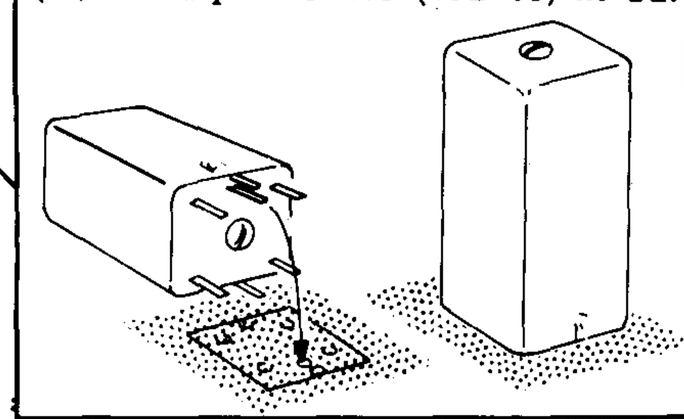

( ) Check to see that all connections are soldered.

FINISH

PICTORIAL 2-3

CHASSIS ASSEMBLY

This section of the Manual contains a separate Parts List and separate Step-By-Step Assembly instructions for the mounting of parts on the chassis and the wiring of the coil section.

Parts List #3

Unpack package #3 and check each part against the following Parts List. The numbers in parentheses are keyed to the numbers in the Parts Pictorial (fold-out from Page 14). Parts (except for hardware) that have been shown in a previous Parts Pictorial will not be repeated in this Parts Pictorial.

PART No.	PARTS Per Kit	DESCRIPTION
RESISTORS - 1/2 Watt		
1-21	4	15 KΩ (brown-green-orange)
CAPACITORS		
20-96	4	36 pf mica
20-97	4	50 pf mica
20-76	2	68 pf mica
20-119	2	90 pf mica
20-102	5	100 pf mica
20-114	2	270 pf mica
21-16	3	.01 μfd disc
(1) 25-163	1	100-40-40-40 μfd electrolytic
(2) 26-74	1	4-section variable

PART No.	PARTS Per Kit	DESCRIPTION
COILS		
(3) 40-785	1	BFO output
(4) 40-764	1	80 meter RF
40-765	1	40 meter RF
40-766	1	20 meter RF
40-767	1	15 meter RF
40-768	1	10 meter RF
(5) 40-759	1	80 meter antenna
40-760	1	40 meter antenna
40-761	1	20 meter antenna
40-762	1	15 meter antenna
40-763	1	10 meter antenna
(6) 40-769	1	12.395 MHz
40-770	1	15.895 MHz
40-771	1	22.895 MHz
40-552	1	23.895 MHz
40-772	1	29.895 MHz
40-773	4	36.895-38.395 MHz
CHOKE-TRANSFORMERS		
(7) 45-43	2	RF choke
51-140	1	Audio output transformer
54-146-24	1	Power transformer

WIRE-CABLE-SLEEVING

PART No.	PARTS Per Kit	DESCRIPTION
340-2	1	Bare wire
343-5	1	Large coaxial cable (RG-62)
343-7	1	Small coaxial cable (RG-174)
344-50	1	Black hookup wire
344-51	1	Brown hookup wire
344-52	1	Red hookup wire
344-53	1	Orange hookup wire
344-54	1	Yellow hookup wire
344-55	1	Green hookup wire
344-56	1	Blue hookup wire
344-57	1	Violet hookup wire
344-59	1	White hookup wire
346-1	1	Sleeving

TERMINAL STRIPS

PART No.	PARTS Per Kit	DESCRIPTION
(8) 431-57	1	2-lug miniature
(9) 431-10	1	3-lug
(10) 431-40	1	4-lug
(11) 431-11	6	5-lug
431-45	1	6-lug

SOCKETS-JACK

PART No.	PARTS Per Kit	DESCRIPTION
(12) 423-1	1	Fuseholder
(13) 434-4	1	Octal socket
(14) 432-4	1	Line cord socket
(15) 434-121	1	12-pin tube socket
(16) 434-42	13	Phono socket
434-74	12	Crystal socket

GENERAL

PART No.	PARTS Per Kit	DESCRIPTION
(17) 10-61	1	200 Ω twist tab control
(18) 10-202	1	10 KΩ control
(19) 63-336	1	3-position rotary switch
(20) 73-45	2	Plastic grommet
(21) 260-7	1	Coil mounting clip
(22) 404-283	1	2.1 kHz SSB filter
(23) 435-1	1	Octal socket mounting ring
(24) 481-1	1	Capacitor mounting wafer
489-1	1	Sandpaper

HARDWARE

#3 Hardware

PART No.	PARTS Per Kit	DESCRIPTION
(25) 250-172	34	3-48 x 3/8" screw
(26) 252-1	36	3-48 nut
(27) 254-7	49	#3 lockwasher

#4 Hardware

PART No.	PARTS Per Kit	DESCRIPTION
(28) 250-34	12	4-40 x 1/2" screw
(29) 252-15	18	4-40 nut
(30) 254-9	22	#4 lockwasher

#6 Hardware

PART No.	PARTS Per Kit	DESCRIPTION
(31) 250-56	34	6-32 x 1/4" screw
(32) 250-89	2	6-32 x 3/8" screw
(33) 250-27	2	6-32 x 2" screw
(34) 252-3	38	6-32 nut
(35) 252-23	2	6-32 thumbnut
(36) 254-1	44	#6 lockwasher
(37) 259-6	10	Small #6 solder lug
(38) 259-1	4	Large #6 solder lug

#8 Hardware

PART No.	PARTS Per Kit	DESCRIPTION
(39) 250-87	4	8-32 x 3/16" screw
(40) 250-137	4	8-32 x 3/8" screw
(41) 252-4	4	8-32 nut
(42) 253-42	2	#8 flat washer
(43) 254-2	8	#8 lockwasher

3/8" Control Hardware

PART No.	PARTS Per Kit	DESCRIPTION
(44) 252-7	3	Control nut
(45) 253-10	3	Control flat washer
(46) 254-5	3	Control lockwasher

METAL PARTS

PART No.	PARTS Per Kit	DESCRIPTION
(47) 206-310-1	1	Coil enclosure
(48) 206-311	2	Coil enclosure partition
(49) 204-557	2	Capacitor mounting bracket
(50) 204-727	1	Switch mounting bracket

ITEM FROM PACK #5

PART No.	PARTS Per Kit	DESCRIPTION
200-468-1	1	Chassis

STEP-BY-STEP ASSEMBLY

Since the drawings in the Manual may be slightly distorted to show all the parts clearly, it might be helpful to look at the Chassis Photos (fold-out from Page 78) from time-to-time to see the actual position of wires and components.

COIL WIRING

NOTE: When a step calls for only one end of a wire to be connected, the other end of this wire will be left free to be connected later.

NOTE: If you wish, the following lengths of hookup wire may be prepared ahead of time. To prepare a wire, cut it to the specified length, then remove 1/4" of insulation from each end. The wire lengths are listed in the order in which they will be used.

( ) Prepare the following lengths of hookup wire:

COLOR	LENGTH
Green	2-1/2"
Green	3-1/2"
Red	2-3/4"
White	1-3/4"
Black	1-3/4"
Black	2-1/4"

Refer to Pictorial 3-1 (fold-out from Page 23) for the following steps.

( ) Position the chassis right-side up with the rear apron toward you.

( ) Refer to Detail 3-1A, and install a small #6 solder lug at TB. Use 6-32 x 2" hardware. Bend the solder lug as shown.

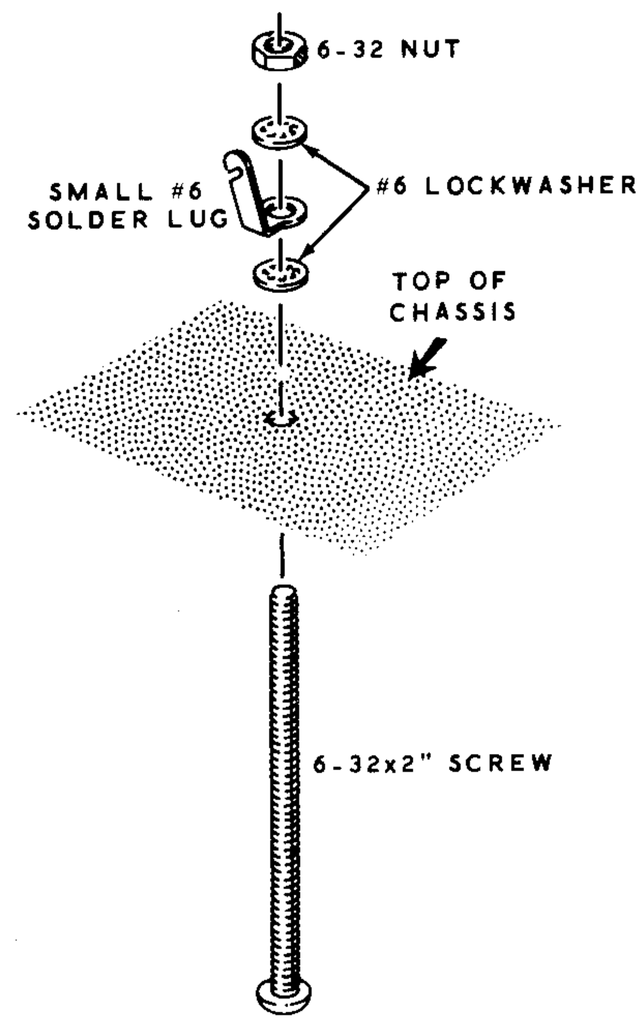

Detail 3-1A

Refer to Detail 3-1B for the following steps.

( ) Locate coil #40-773, and connect a 36 pf mica capacitor between lugs 1 (NS) and 2 (NS). Note the position of the locating tab on the coil.

( ) Connect one end of a 2-1/2" green wire to lug 1 (S-2).

( ) Connect one end of a 3-1/2" green wire to lug 4 (S-1).

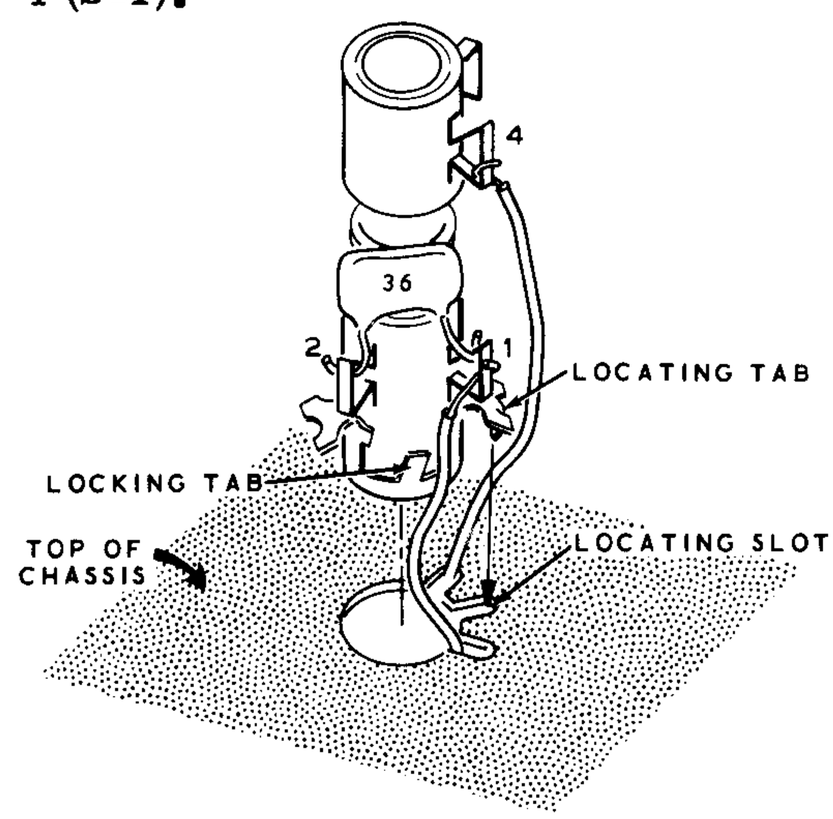

Detail 3-1B

( ) Install this coil at CA. Position the locating tab of the coil in the locating slot of the chassis. Place the wire from lug 1 through slot 2 and the wire from lug 4 through slot 1. Push on the top of the coil until the locking tabs snap outward under the chassis.

Refer to Pictorial 3-1 and Detail 3-1C for the following steps.

( ) Connect a 50 pf mica capacitor between lugs 1 (NS) and 2 (NS) of coil CB (#40-552).

( ) Connect one end of a 2-3/4" red wire to lug 1 of this coil (NS).

( ) Connect one end of a 1-3/4" white wire to lug 2 of this coil (S-2).

( ) Install this coil at CB with the wire from lug 2 through slot 3 and the wire from lug 1 through hole 10.

( ) Connect a 50 pf mica capacitor between lugs 1 (NS) and 2 (NS) of coil CC (#40-771).

( ) Connect one end of a 1-3/4" black wire to lug 2 of this coil (S-2).

( ) Connect one end of a 2-1/4" black wire to lug 3 of this coil (S-1).

( ) Install this coil at CC with the wire from lug 2 through slot 4 and the wire from lug 3 through slot 5.

NOTE: Where a wire passes through a connection and then goes to another point, as in the next step, it will count as two wires in the soldering instructions (S-2), one entering and one leaving the connection. Be especially careful, when soldering these connections, to apply enough solder and heat to solder these "through wires."

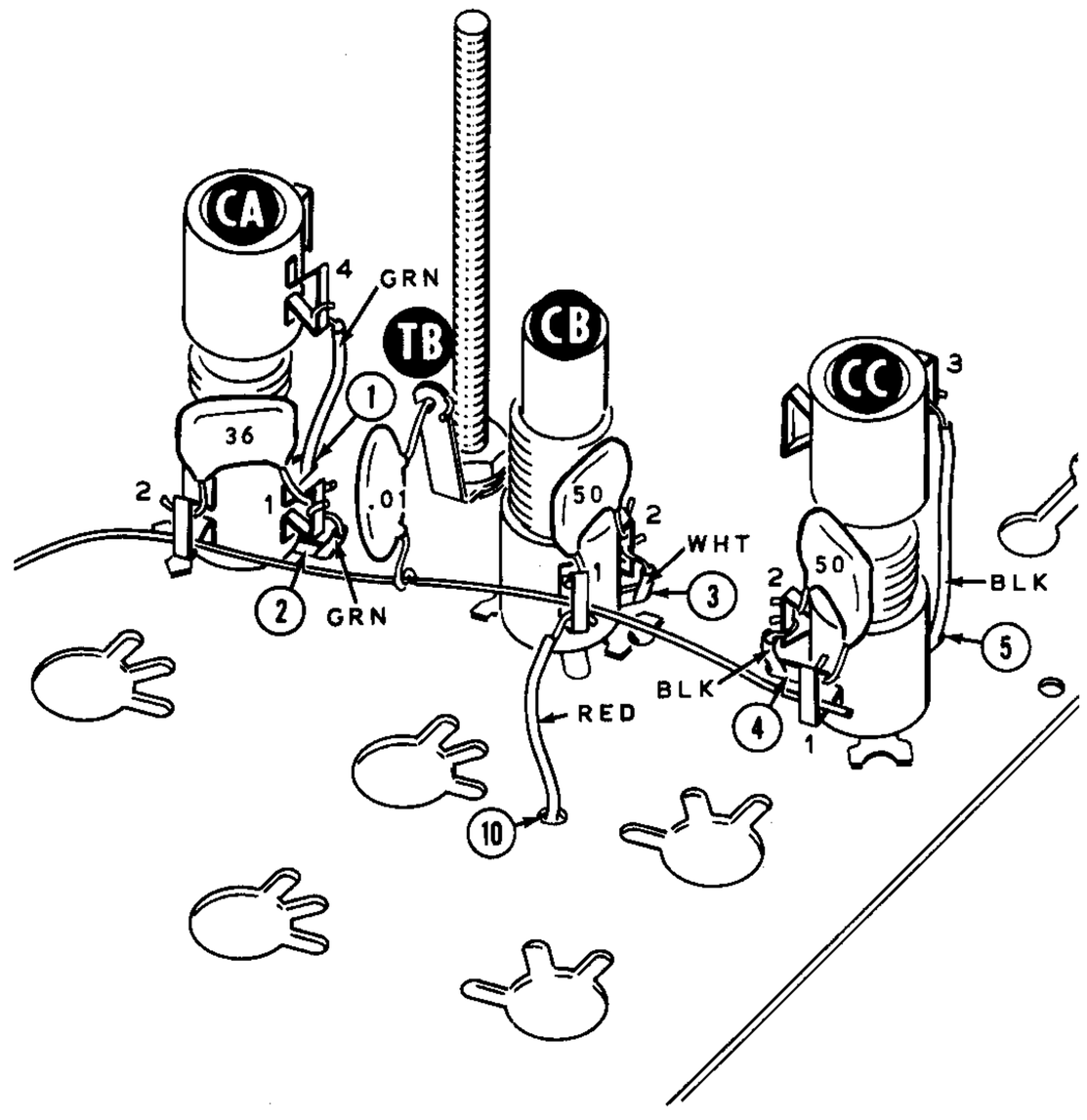

Detail 3-1C

CAUTION: Some of the bare wires installed in the following steps are B+ leads. It is very important that the bare wires do not touch any lug other than those to which they are connected.

( ) Pass one end of a 3" bare wire through lug 2 of coil CA (S-3), through lug 1 of coil CB (S-4), to lug 1 of coil CC (S-2). The end of the bare wire extending from lug 2 of coil CA will be connected later.

( ) Connect a .01 μfd disc capacitor from solder lug TB (NS) to the bare wire connected between lug 2 of coil CA and lug 1 of coil CB (S-1).

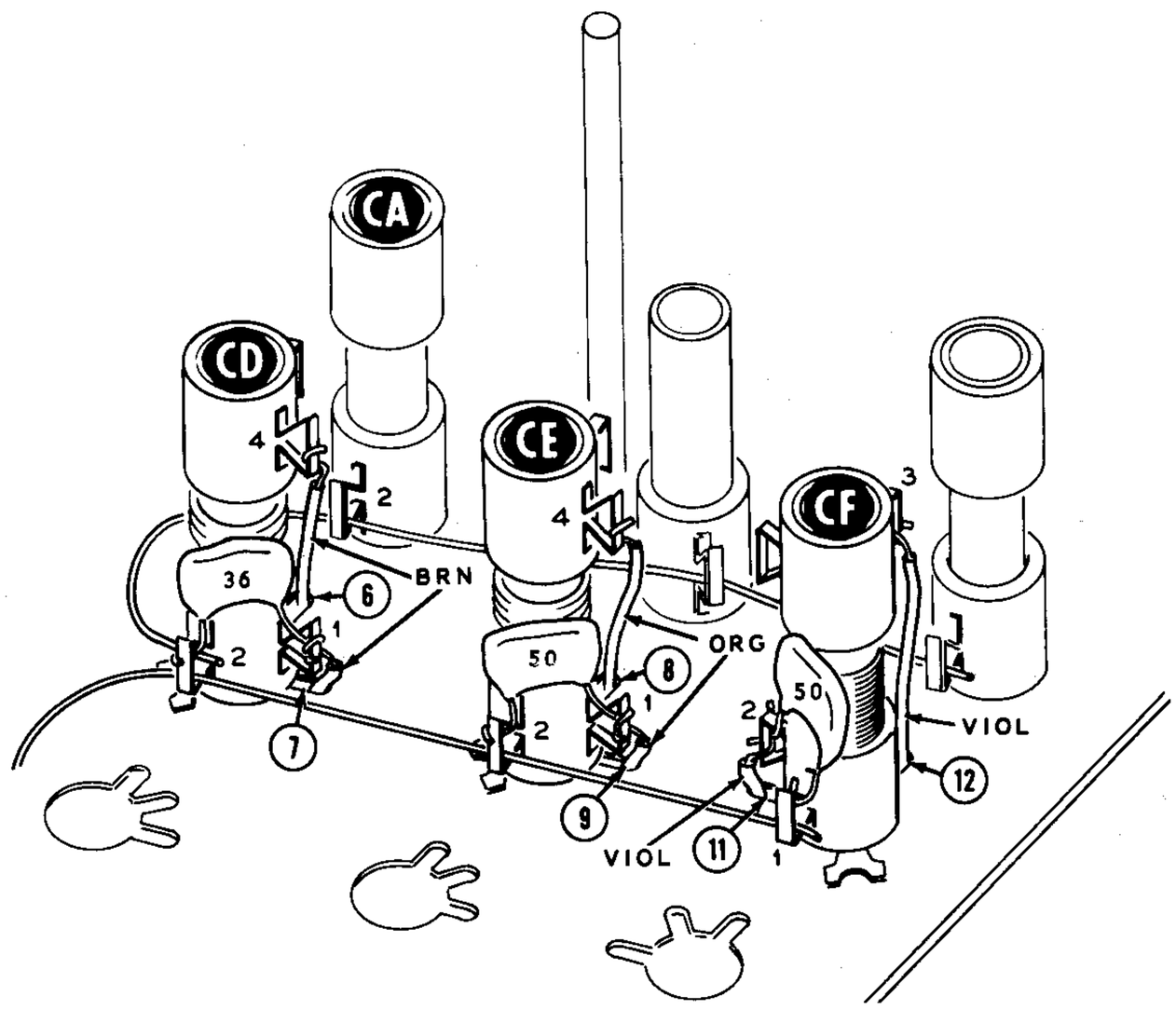

PICTORIAL 3-2

Refer to Pictorial 3-2 for the following.

( ) Prepare the following lengths of hookup wire:

COLOR	LENGTH
Brown	2-1/4"
Brown	3-3/4"
Orange	1-1/2"
Orange	2-1/2"
Violet	1-3/4"
Violet	3"

( ) Connect a 36 pf mica capacitor between lugs 1 (NS) and 2 (NS) of coil CD (#40-773).

( ) Connect one end of a 2-1/4" brown wire to lug 1 of this coil (S-2).

( ) Connect one end of a 3-3/4" brown wire to lug 4 of this coil (S-1).

( ) Install this coil at CD with the wire from lug 1 through slot 7 and the wire from lug 4 through slot 6.

( ) Connect a 50 pf mica capacitor between lugs 1 (NS) and 2 (NS) of coil CE (#40-772).

( ) Connect one end of a 1-1/2" orange wire to lug 1 of this coil (S-2).

( ) Connect one end of a 2-1/2" orange wire to lug 4 of this coil (S-1).

( ) Install this coil at CE with the wire from lug 1 through slot 9 and the wire from lug 4 through slot 8.

( ) Connect a 50 pf mica capacitor between lugs 1 (NS) and 2 (NS) of coil CF (#40-770).

( ) Connect one end of a 1-3/4" violet wire to lug 2 of this coil (S-2).

( ) Connect one end of a 3" violet wire to lug 3 of this coil (S-1).

( ) Install this coil at CF with the wire from lug 2 through slot 11 and the wire from lug 3 through slot 12.

( ) Connect the free end of the bare wire coming from lug 2 of coil CA to lug 2 of coil CD (NS).

( ) Pass one end of a 3" bare wire through lug 2 of coil CD (S-4) and through lug 2 of coil CE (S-3) to lug 1 of coil CF (S-2). The end of the bare wire extending from lug 2 of coil CD will be connected later.

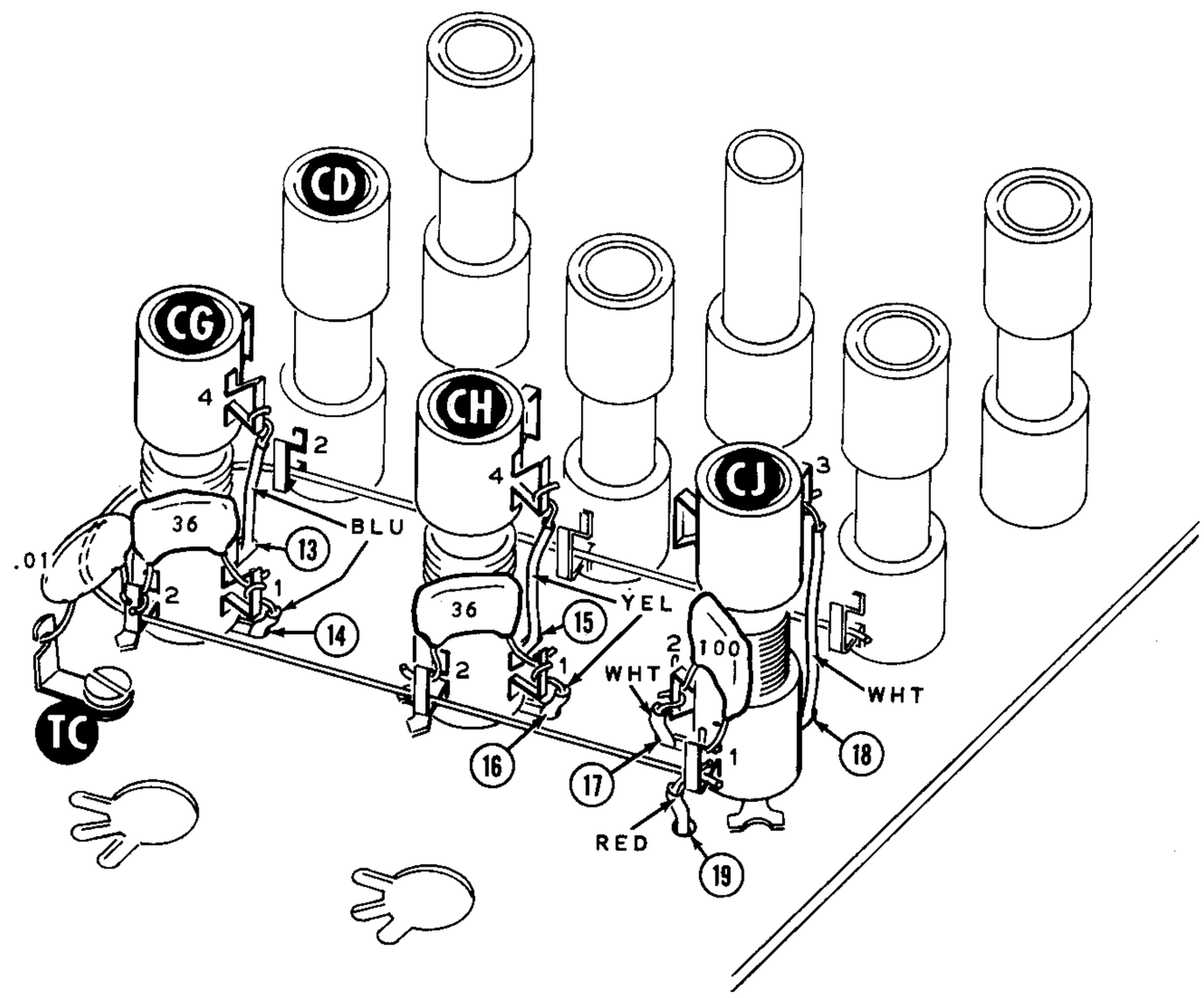

PICTORIAL 3-3

Refer to Pictorial 3-3 for the following steps:

( ) Refer to Detail 3-3A, and mount a small #6 solder lug at TC. Use 3-48 x 3/8" hardware. Bend the solder lug as shown.

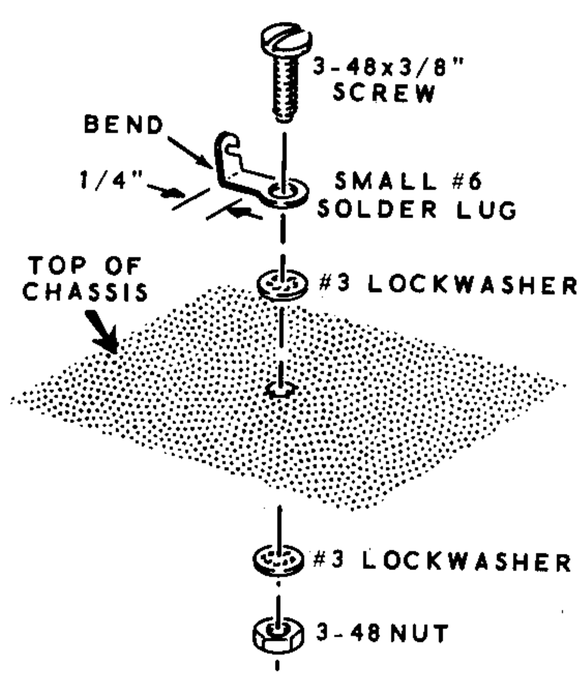

Detail 3-3A

( ) Prepare the following lengths of hookup wire:

COLOR	LENGTH
Blue	2"
Blue	3-1/4"
Yellow	2"
Yellow	3-1/2"
Red	2"
White	2-1/4"
White	3-3/4"

( ) Connect a 36 pf mica capacitor between lugs 1 (NS) and 2 (NS) of coil CG (#40-773).

( ) Connect one end of a 2" blue wire to lug 1 of this coil (S-2).

( ) Connect one end of a 3-1/4" blue wire to lug 4 of this coil (S-1).

( ) Install this coil at CG with the wire from lug 1 through slot 14 and the wire from lug 4 through slot 13.

( ) Connect a 36 pf mica capacitor between lugs 1 (NS) and 2 (NS) of coil CH (#40-773).

( ) Connect one end of a 2" yellow wire to lug 1 of this coil (S-2).

( ) Connect one end of a 3-1/2" yellow wire to lug 4 of this coil (S-1).

( ) Install this coil at CH with the wire from lug 1 through slot 16 and the wire from lug 4 through slot 15.

( ) Connect a 100 pf mica capacitor between lugs 1 (NS) and 2 (NS) of coil CJ (#40-769).

( ) Connect one end of a 2" red wire to lug 1 of this coil (NS).

( ) Connect one end of a 2-1/4" white wire to lug 2 of this coil (S-2).

( ) Connect one end of a 3-3/4" white wire to lug 3 of this coil (S-1).

( ) Install this coil at CJ with the wire from lug 1 through hole 19, the wire from lug 2 through slot 17, and the wire from lug 3 through slot 18.

( ) Connect the free end of the bare wire coming from lug 2 of coil CD to lug 2 of coil CG (NS).

( ) Pass one end of a 2-1/4" bare wire through lug 2 of coil CG (NS) and through lug 2 of coil CH (S-3) to lug 1 of coil CJ (S-3).

( ) Connect a .01 μfd disc capacitor from lug 2 of coil CG (S-4) to solder lug TC (S-1). Be sure to position this capacitor as shown.

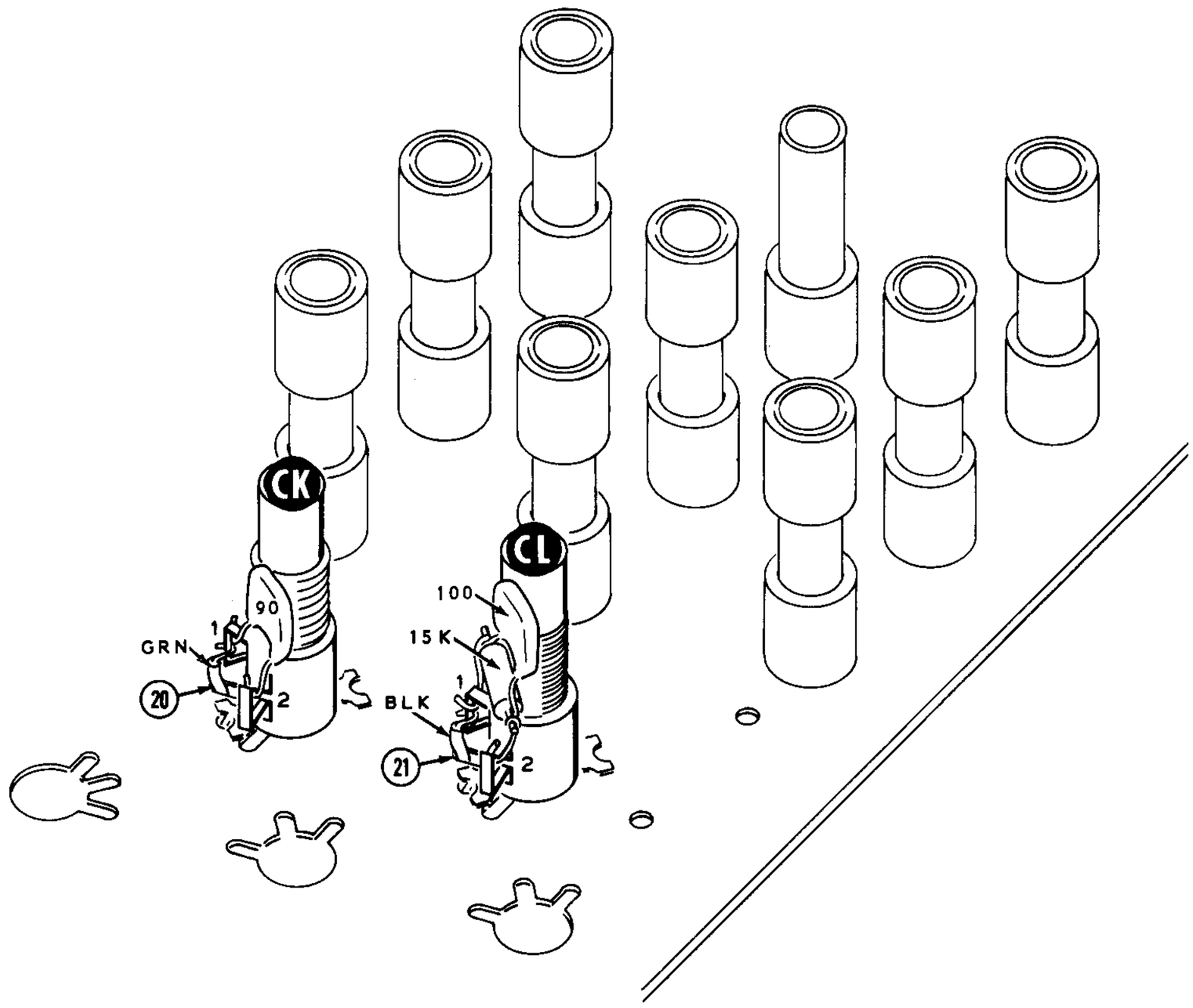

PICTORIAL 3-4

Refer to Pictorial 3-4 for the following steps.

( ) Prepare the following lengths of hookup wire:

COLOR	LENGTH
Green	1-1/2"
Black	2"

( ) Connect a 90 pf mica capacitor between lugs 1 (NS) and 2 (NS) of coil CK (#40-767).

( ) Connect one end of a 1-1/2" green wire to lug 1 of this coil (S-2).

( ) Install this coil at CK with the wire from lug 1 through slot 20.

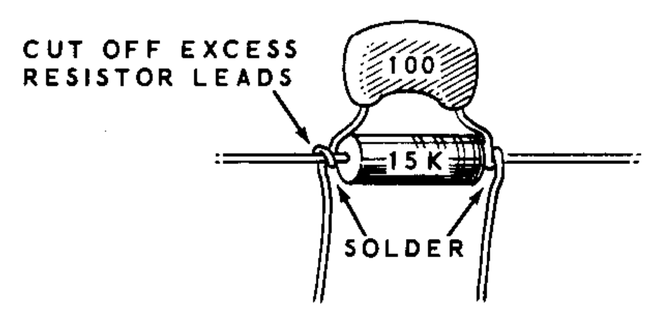

Detail 3-4A

( ) Refer to Detail 3-4A, and prepare a resistor-capacitor combination using a 15 KΩ (brown-green-orange) resistor and a 100 pf mica capacitor.

( ) Connect this combination between lugs 1 (NS) and 2 (NS) of coil CL (#40-765).

( ) Connect one end of a 2" black wire to lug 1 of this coil (S-2).

( ) Install this coil at CL with the wire from lug 1 through slot 21.

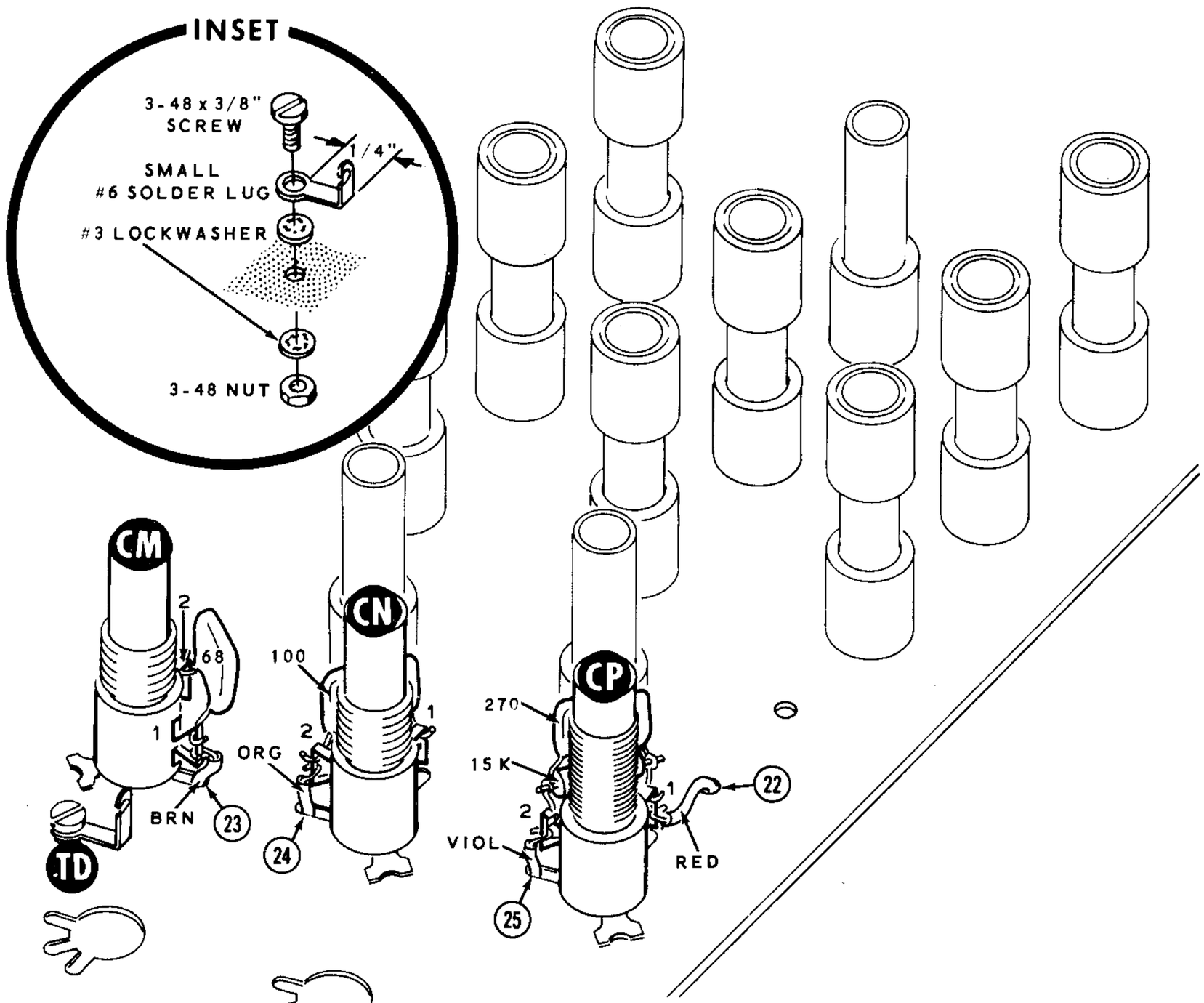

PICTORIAL 3-5

Refer to Pictorial 3-5 for the following steps.

( ) Mount a small #6 solder lug at TD, using 3-48 x 3/8" hardware. Bend the solder lug up as shown in the inset drawing.

( ) Prepare the following lengths of hookup wire:

COLOR	LENGTH
Brown	2"
Orange	2-1/4"
Violet	2-1/4"
Red	2-1/2"

( ) Connect a 68 pf mica capacitor between lugs 1 (NS) and 2 (NS) of coil CM (#40-768).

( ) Connect one end of a 2" brown wire to lug 1 of this coil (S-2).

( ) Install this coil at CM with the wire from lug 1 through slot 23.

( ) Connect a 100 pf mica capacitor between lugs 1 (NS) and 2 (NS) of coil CN (#40-766).

( ) Connect one end of a 2-1/4" orange wire to lug 2 of this coil (S-2).

( ) Install this coil at CN with the wire from lug 2 through slot 24.

( ) Prepare a resistor-capacitor combination using a 15 KΩ (brown-green-orange) resistor and a 270 pf mica capacitor.

( ) Connect this combination between lugs 1 (NS) and 2 (NS) of coil CP (#40-764).

( ) Connect one end of a 2-1/4" violet wire to lug 2 of this coil (S-2).

( ) Connect one end of a 2-1/2" red wire to lug 1 of this coil (NS).

( ) Install this coil at CP with the wire from lug 2 through slot 25 and the wire from lug 1 through hole 22.

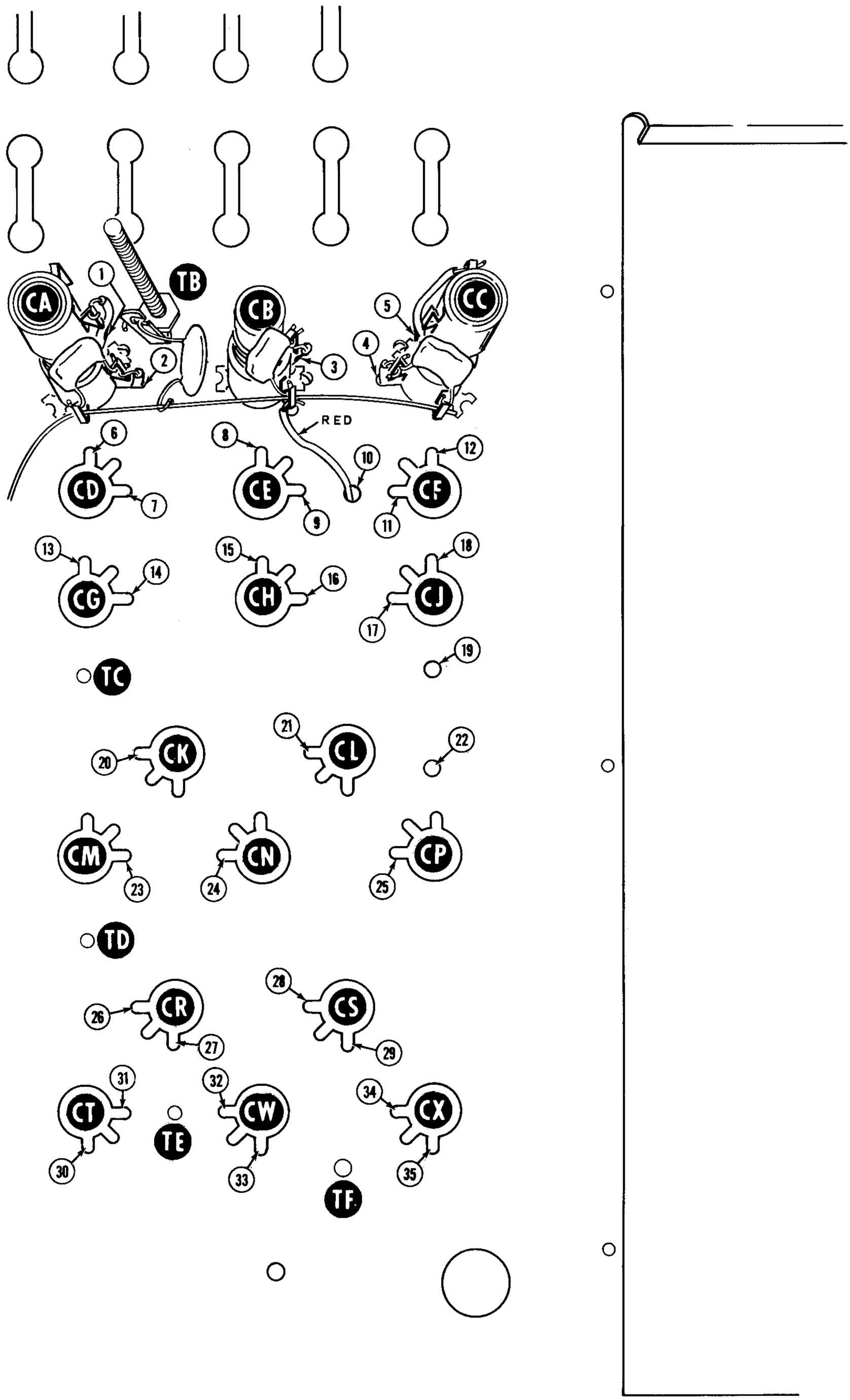

PICTORIAL 3-1

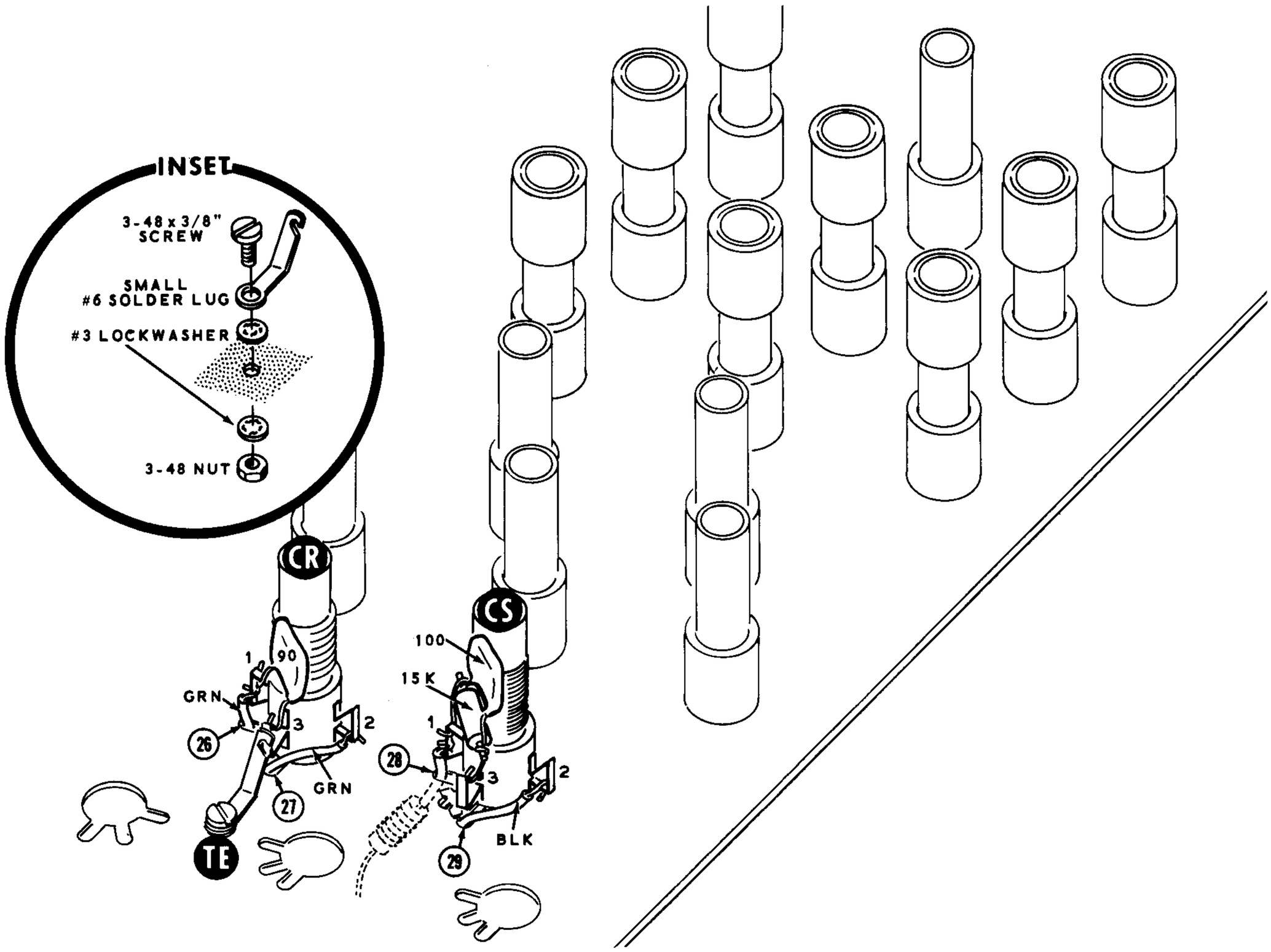

PICTORIAL 3-6

Refer to Pictorial 3-6 for the following steps.

( ) Mount a small #6 solder lug at TE, using 3-48 x 3/8" hardware. Bend the solder lug up as shown in the inset drawing.

( ) Prepare the following lengths of hookup wire:

COLOR	LENGTH
Green	1-1/2"
Green	1-1/2"
Black	2"

( ) Connect a 90 pf mica capacitor between lugs 1 (NS) and 3 (NS) of coil #40-762.

( ) Connect one end of a 1-1/2" green wire to lug 1 of this coil (S-2).

( ) Connect one end of another 1-1/2" green wire to lug 2 of this coil (S-1).

( ) Install this coil at CR with the wire from lug 1 through slot 26 and the wire from lug 2 through slot 27.

( ) Prepare a resistor-capacitor combination using a 15 KΩ (brown-green-orange) resistor and a 100 pf mica capacitor.

( ) Connect this combination between lugs 1 (NS) and 3 (NS) of coil #40-760.

( ) Connect one end of a 2" black wire to lug 2 of this coil (S-1).

( ) Install this coil at CS with the wire from lug 2 through slot 29.

( ) Place a 1/2" length of sleeving in slot 28 from beneath the chassis.

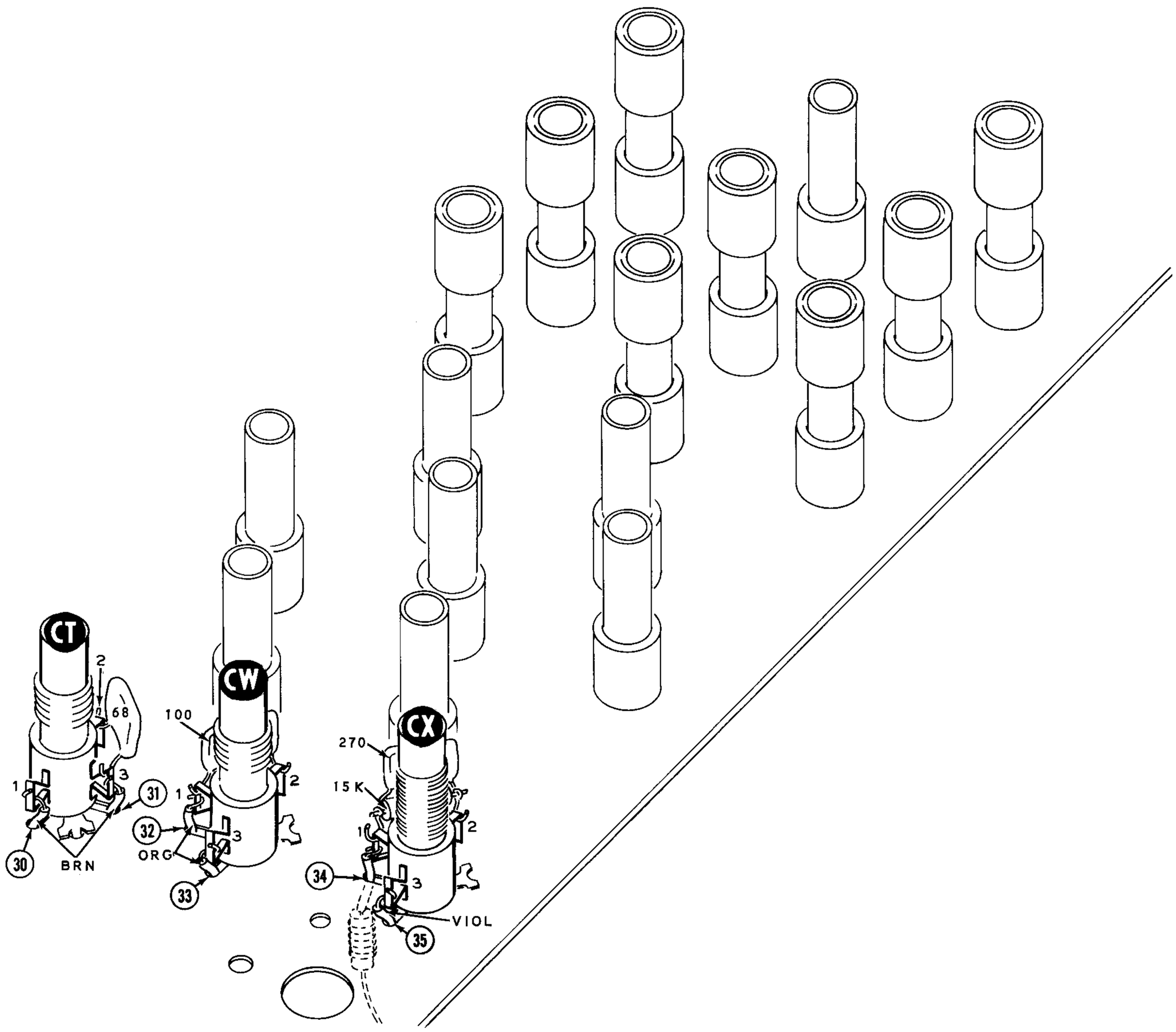

PICTORIAL 3-7

( ) Cut one lead of choke #45-43 to 3/4". Pass this lead up through the sleeving in slot 28; then connect this lead of the choke to lug 1 of coil CS (S-2). The other lead of this choke will be connected later.

Refer to Pictorial 3-7 for the following steps.

( ) Prepare the following lengths of hookup wire:

COLOR	LENGTH
Brown	1-1/2"
Brown	2"
Orange	2-1/4"
Orange	1-1/2"
Violet	2"

( ) Connect a 68 pf mica capacitor between lugs 2 (NS) and 3 (NS) of coil CT (#40-763).

( ) Connect one end of a 1-1/2" brown wire to lug 1 of this coil (S-1).

( ) Connect one end of a 2" brown wire to lug 3 of this coil (S-2).

( ) Install this coil at CT with the wire from lug 1 through slot 30 and the wire from lug 3 through slot 31.

( ) Connect a 100 pf mica capacitor between lugs 1 (NS) and 2 (NS) of coil CW (#40-761).

( ) Connect one end of a 2-1/4" orange wire to lug 1 of this coil (S-2).

( ) Connect one end of a 1-1/2" orange wire to lug 3 of this coil (S-1).

( ) Install this coil at CW with the wire from lug 1 through slot 32 and the wire from lug 3 through slot 33.

( ) Prepare a resistor-capacitor combination using a 15 KΩ (brown-green-orange) resistor and a 270 pf mica capacitor.

( ) Connect this combination between lugs 1 (NS) and 2 (NS) of coil CX (#40-759).

( ) Connect one end of a 2" violet wire to lug 3 of this coil (S-1).

( ) Install this coil at CX with the wire from lug 3 through slot 35.

( ) Place a 1/2" length of sleeving in slot 34 from beneath the chassis.

( ) Cut one lead of choke #45-43 to 3/4". Pass this lead up through the sleeving in slot 34; then connect this lead to lug 1 of coil CX (S-2). The other lead of this choke will be connected later.

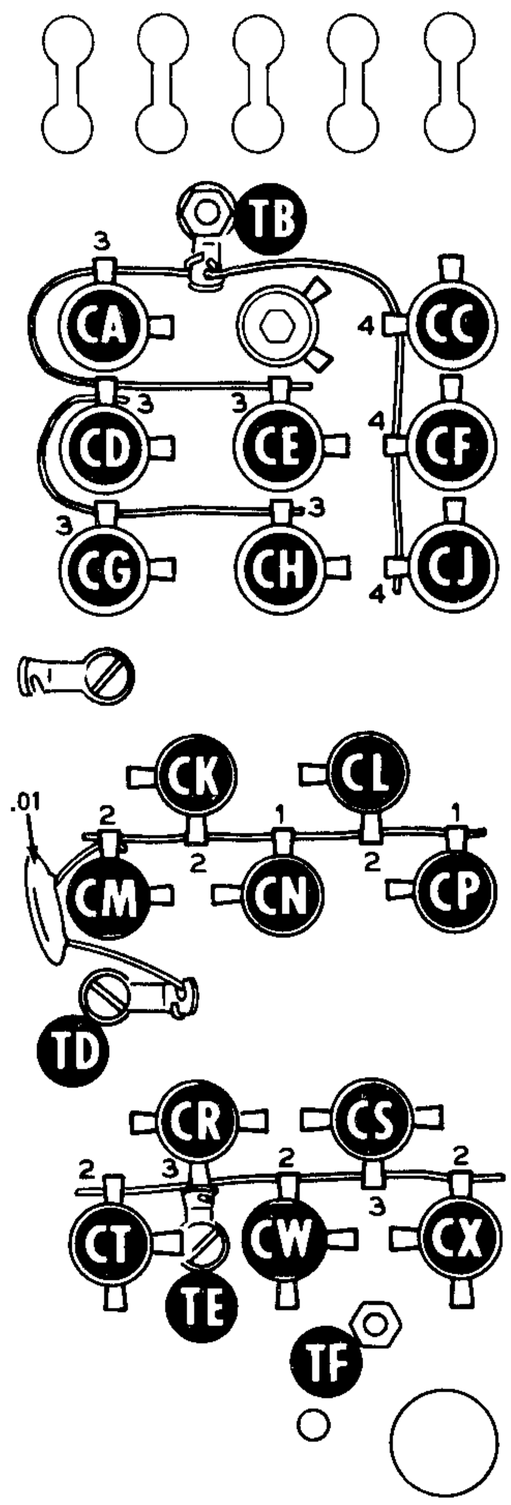

PICTORIAL 3-8

Refer to Pictorial 3-8 for the following steps.

CAUTION: When soldering to the coils in the following steps, be careful not to touch the coil windings with the soldering iron as they may be damaged.

( ) Pass one end of a 3-1/4" bare wire through lug 3 of coil CA (S-2) and through lug 3 of coil CD (NS) to lug 3 of coil CE (S-1). Now connect the other end of this wire to solder lug TB (NS).

( ) Pass one end of a 2-1/4" bare wire through lug 3 of coil CG (S-2) to lug 3 of coil CH (S-1). Now connect the other end of this wire to lug 3 of coil CD (S-3).

( ) Pass one end of a 3" bare wire through lug 4 of coil CC (S-2) and through lug 4 of coil CF (S-2) to lug 4 of coil CJ (S-1). Now connect the other end of this wire to solder lug TB (S-3).

( ) Pass one end of a 2" bare wire through lug 2 of coil CM (NS), through lug 2 of coil CK (S-3), through lug 1 of coil CN (S-3), and through lug 2 of coil CL (S-3) to lug 1 of coil CP (S-3).

( ) Connect a .01 µfd disc capacitor from lug 2 of coil CM (S-3) to solder lug TD (S-1).

( ) Pass one end of a 2" bare wire through lug 2 of coil CT (S-2), through lug 3 of coil CR (S-4), through lug 2 of coil CW (S-3), and through lug 3 of coil CS (S-3) to lug 2 of coil CX (S-2). Be sure solder lug TE is soldered to lug 3 of coil CR.

( ) Install a 6-32 x 2" screw at TF, using a #6 lockwasher and a 6-32 nut.

This completes the coil wiring on the top of the chassis. Check to see that all connections are soldered, that no short circuits exist, and shake out any wire clippings or solder splashes.

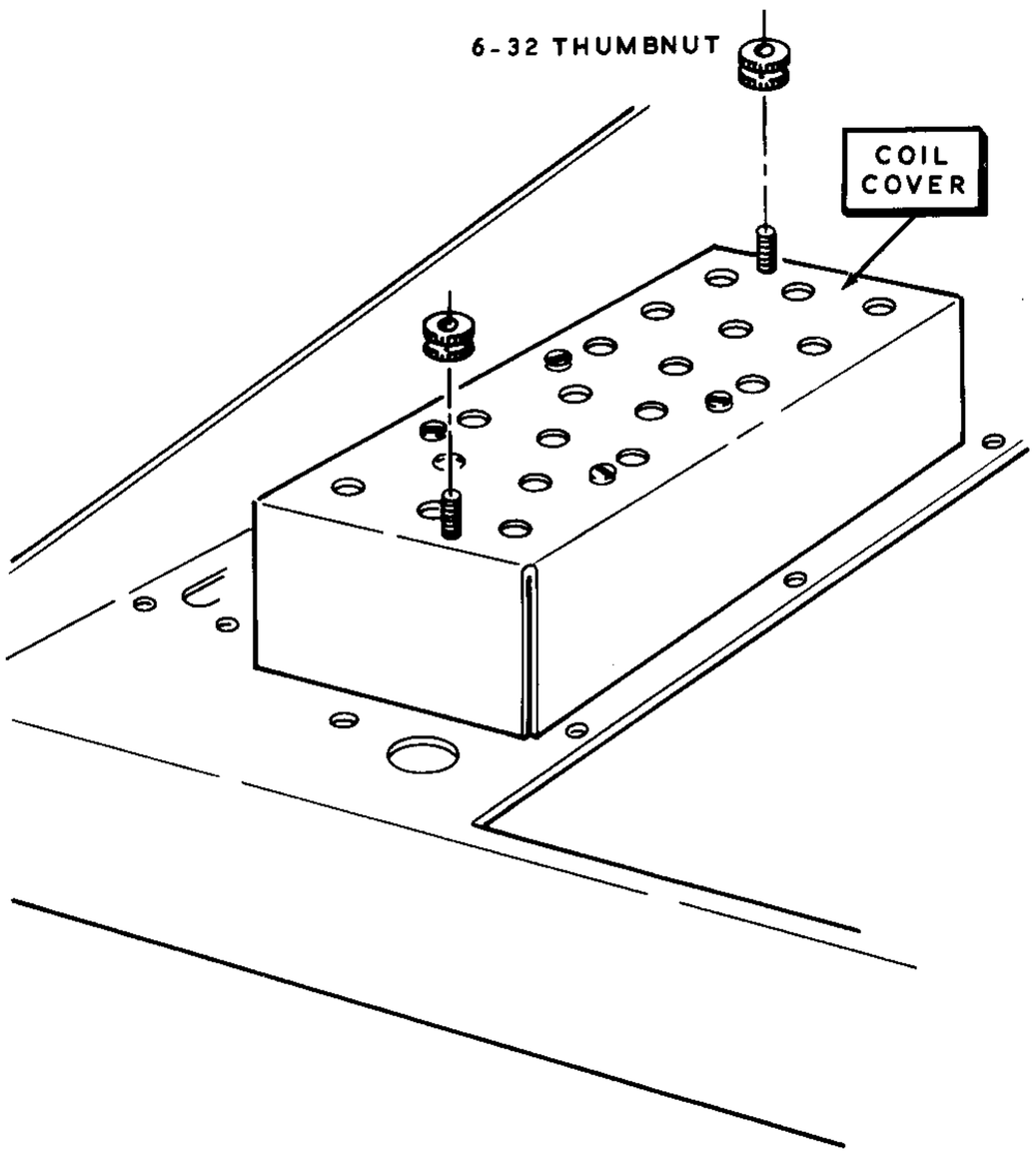

PICTORIAL 3-9

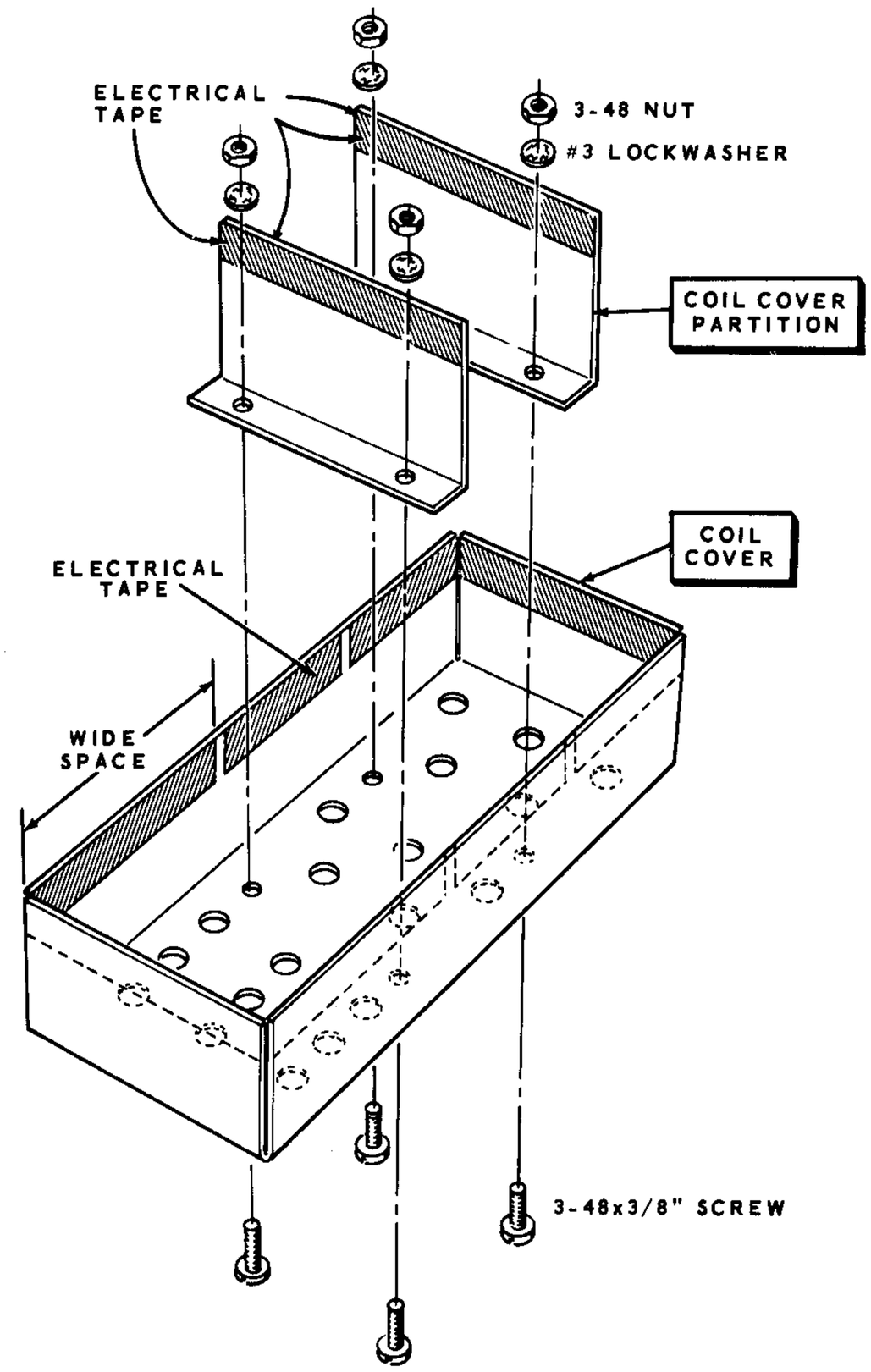

Detail 3-9A

Refer to Pictorial 3-9 and Detail 3-9A, for the following steps.

( ) Install the two coil cover partitions into the coil cover, using 3-48 x 3/8" hardware. Be sure to position the partitions properly with respect to the holes in the cover.

( ) Place strips of electrical tape on all the bottom inside surfaces of the coil cover and coil cover partitions.

( ) Install the coil cover over the coils. Use 6-32 thumbnuts. Position the coil cover so the holes in the cover lineup with the coils.

PARTS MOUNTING

Lockwashers and nuts will be used with most screws when mounting parts, unless the assembly step states otherwise. Consequently, the following steps will call out only the size and type of hardware to be used. For example, the phrase "Use 6-32 x 1/4" hardware" means to use 6-32 x 1/4" screws, one or more #6 lockwashers, and 6-32 nuts. Refer to the Details for the proper installation of hardware. Be sure to position each part as shown in the Pictorials.

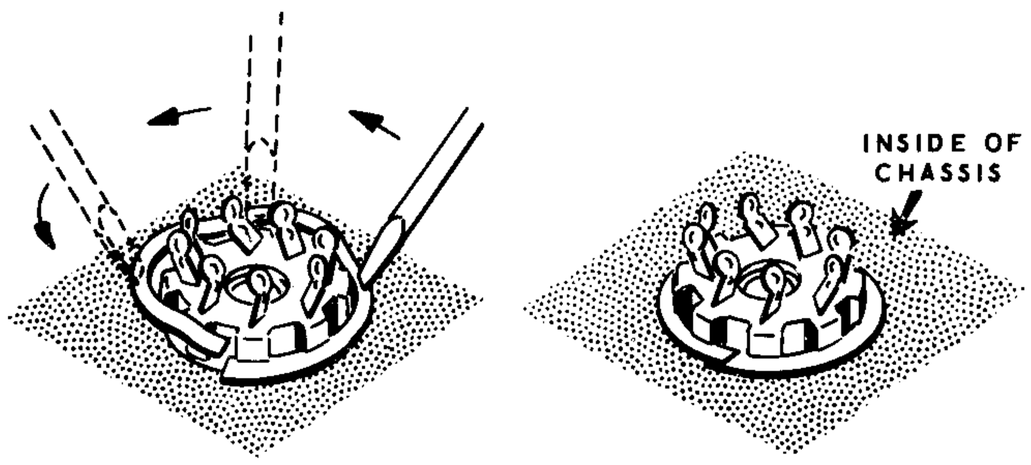

HOLD THE SOCKET IN THE CHASSIS HOLE AND PLACE ONE END OF THE RING INTO THE GROOVE OF THE SOCKET. USING A SCREWDRIVER, PRESS THE RING INTO THE GROOVE AROUND THE SOCKET.

Detail 3-10A

Refer to Pictorial 3-10 (fold-out from Page 35) for the following steps.

( ) Refer to Detail 3-10A, and mount an octal socket at BR using an octal socket mounting ring. Position the keyway of the socket as indicated by the arrow.

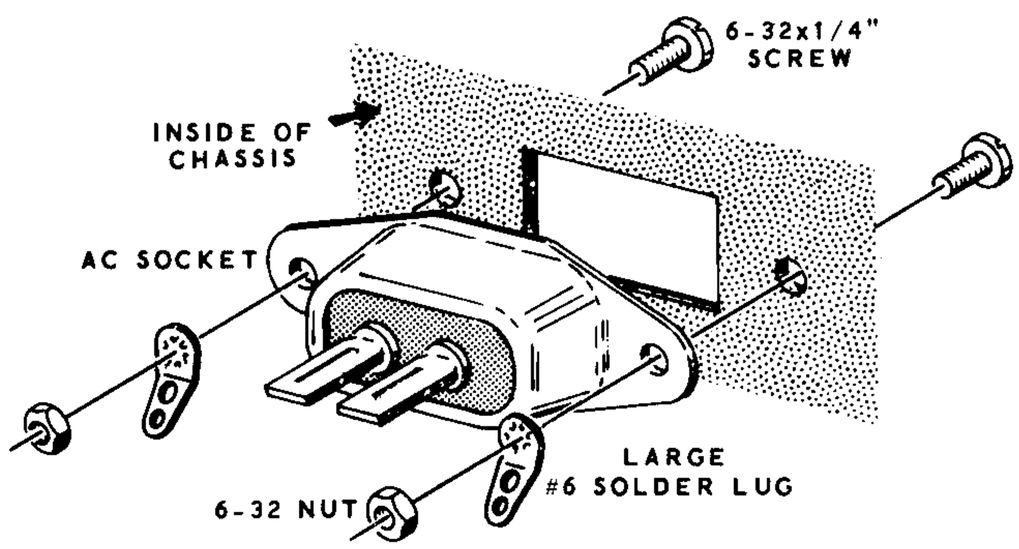

Detail 3-10B

( ) Refer to Detail 3-10B, and mount the line cord socket at BK with two large #6 solder lugs. Use 6-32 x 1/4" screws and 6-32 nuts.

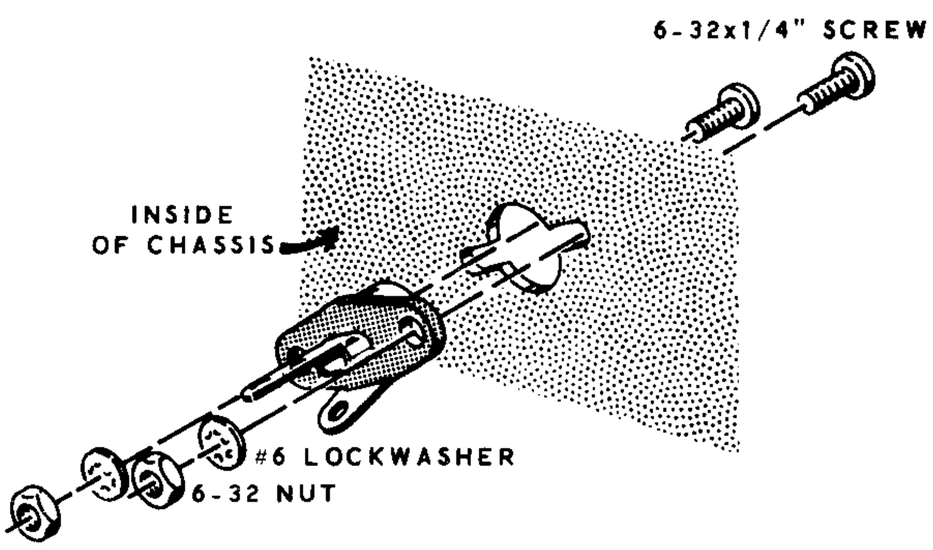

Detail 3-10C

( ) Refer to Detail 3-10C and mount a phono socket at BA. Use 6-32 x 1/4" hardware

( ) In a like manner, mount phono sockets at locations BB through BH, BM through BP, and at BT and BS. Use 6-32 x 1/4" hardware.

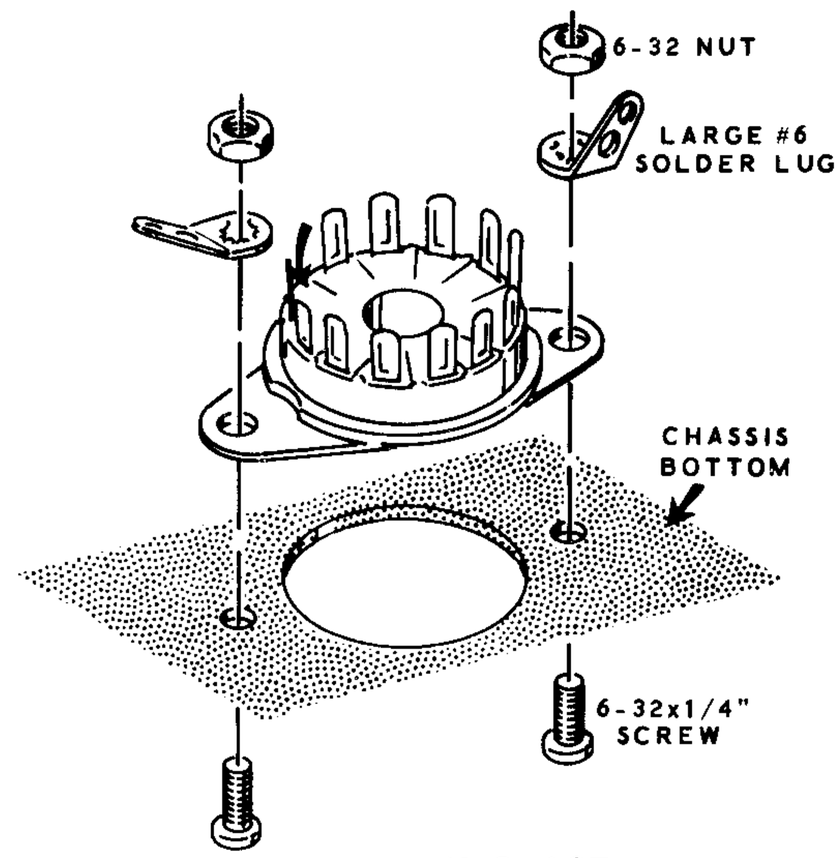

Detail 3-10D

( ) Refer to Detail 3-10D, and mount a 12-pin tube socket with two large #6 solder lugs at V9. Use 6-32 x 1/4" screws and 6-32 nuts. Position the space between the lugs as indicated by the arrow.

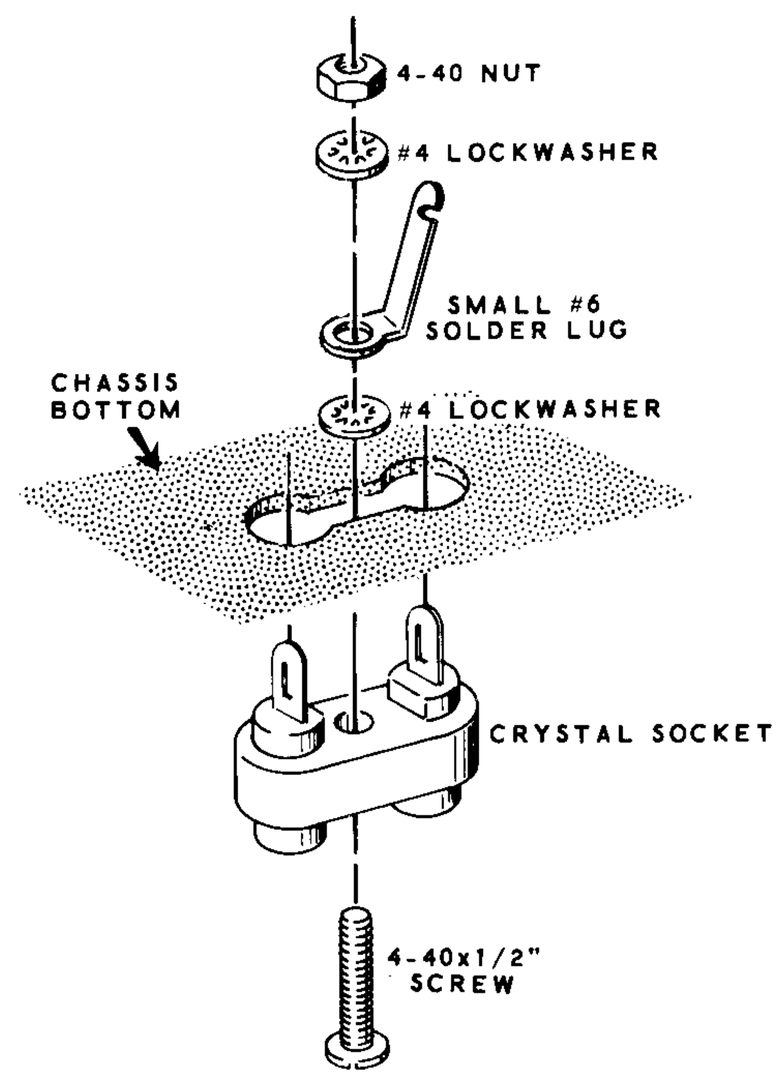

Detail 3-10E

( ) Refer to Detail 3-10E, and mount a crystal socket at Y1 with a small #6 solder lug. Use 4-40 x 1/2" hardware. Do not overtighten the hardware, as the socket can be broken. Bend the solder lug as shown.

( ) In a like manner, mount crystal sockets with small #6 solder lugs at Y5, Y8, and Y11. Use 4-40 x 1/2" hardware. Bend the solder lugs as shown.

( ) Mount crystal sockets at Y2 through Y4, Y6, Y7, Y9, Y10, and Y12. Use 4-40 x 1/2" hardware, with only one lockwasher under each nut.

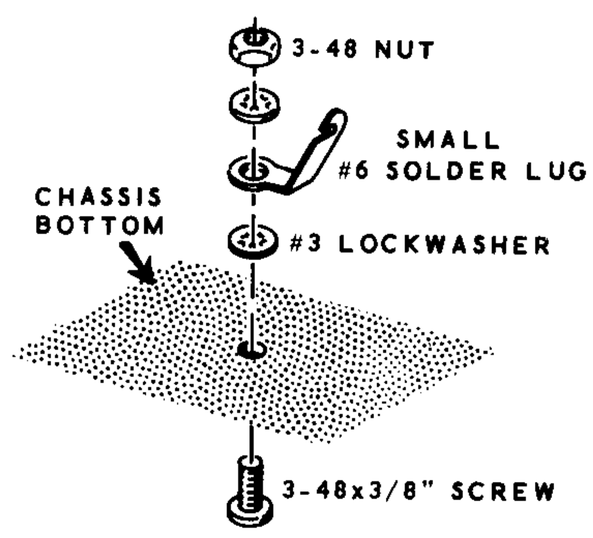

Detail 3-10F

( ) Refer to Detail 3-10F, and mount a small #6 solder lug at C. Use 3-48 x 3/8" hardware.

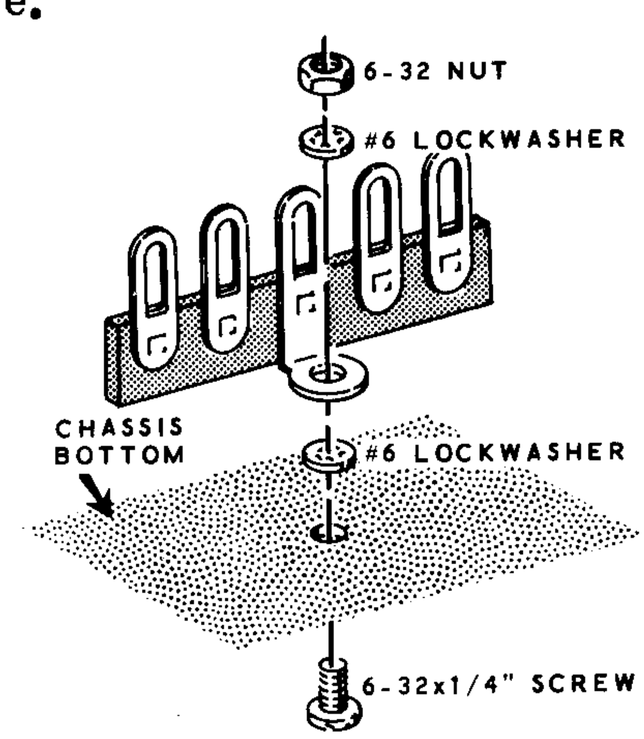

Detail 3-10G

( ) Refer to Detail 3-10G, and mount a 5-lug terminal strip at A. Use 6-32 x 1/4" hardware.

( ) In a like manner, mount 5-lug terminal strips at G, J, and N. Use 6-32 x 1/4" hardware.

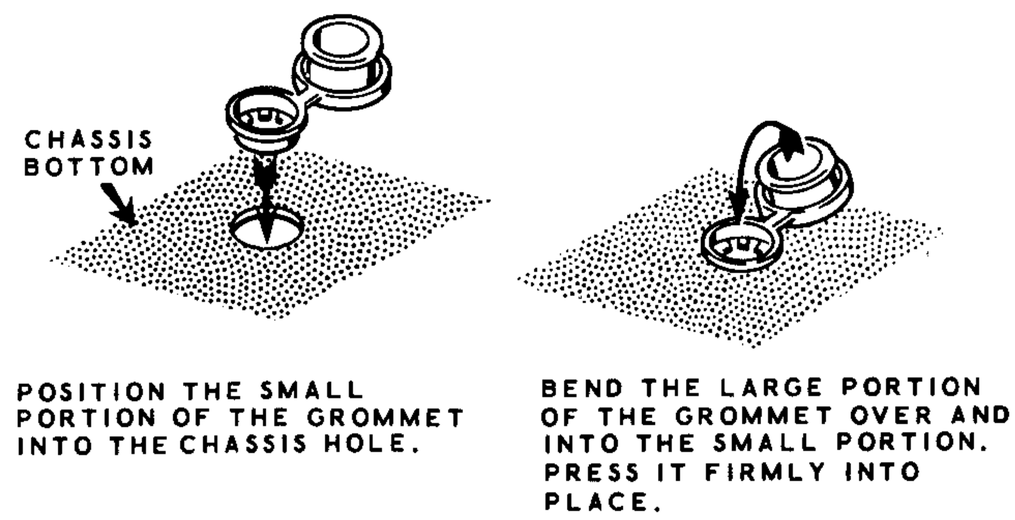

Detail 3-10H

( ) Refer to Detail 3-10H, and mount plastic grommets at HA and HB.

( ) Refer to Detail 3-10J, and mount a 200 Ω twist tab control (#10-61) at P. Twist the tabs 1/8 turn.

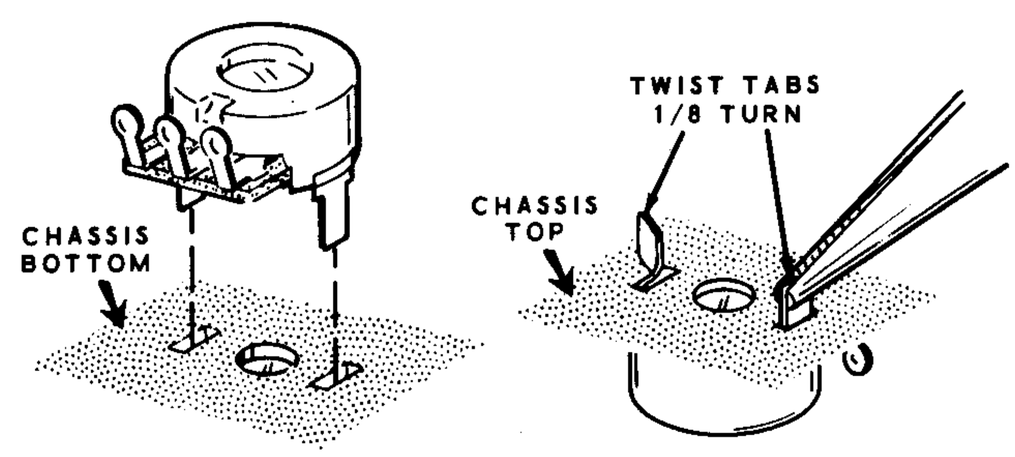

Detail 3-10J

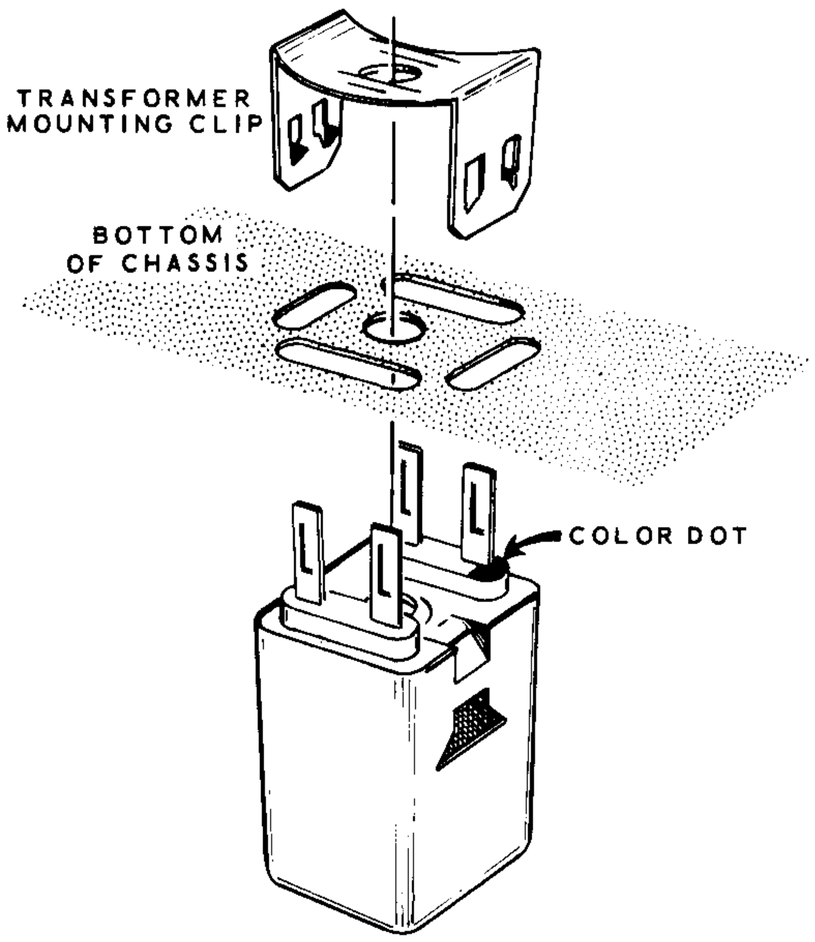

Detail 3-10K

( ) Refer to Detail 3-10K, and mount the BFO output coil (#40-785) at CY. Use the coil mounting clip. Position the color dot of the coil as shown.

Refer to Detail 3-10L for the following steps.

( ) Mount the capacitor mounting wafer at L with a 5-lug terminal strip at M and a 6-lug terminal strip at K. Use 6-32 x 3/8" hardware.

( ) Mount the 100-40-40-40 μfd electrolytic capacitor at L. Position the lug markings as shown in Pictorial 3-10. Then twist the mounting tabs 1/8 turn.

Refer to Pictorial 3-10 for the following steps.

( ) Refer to Detail 3-10M, and mount the fuseholder at E. Use the hardware supplied on the fuseholder.

Warning: Be sure to keep the plates of the variable capacitor fully meshed (closed) at all times during the assembly of the Receiver. This will prevent the plates from being bent or damaged.

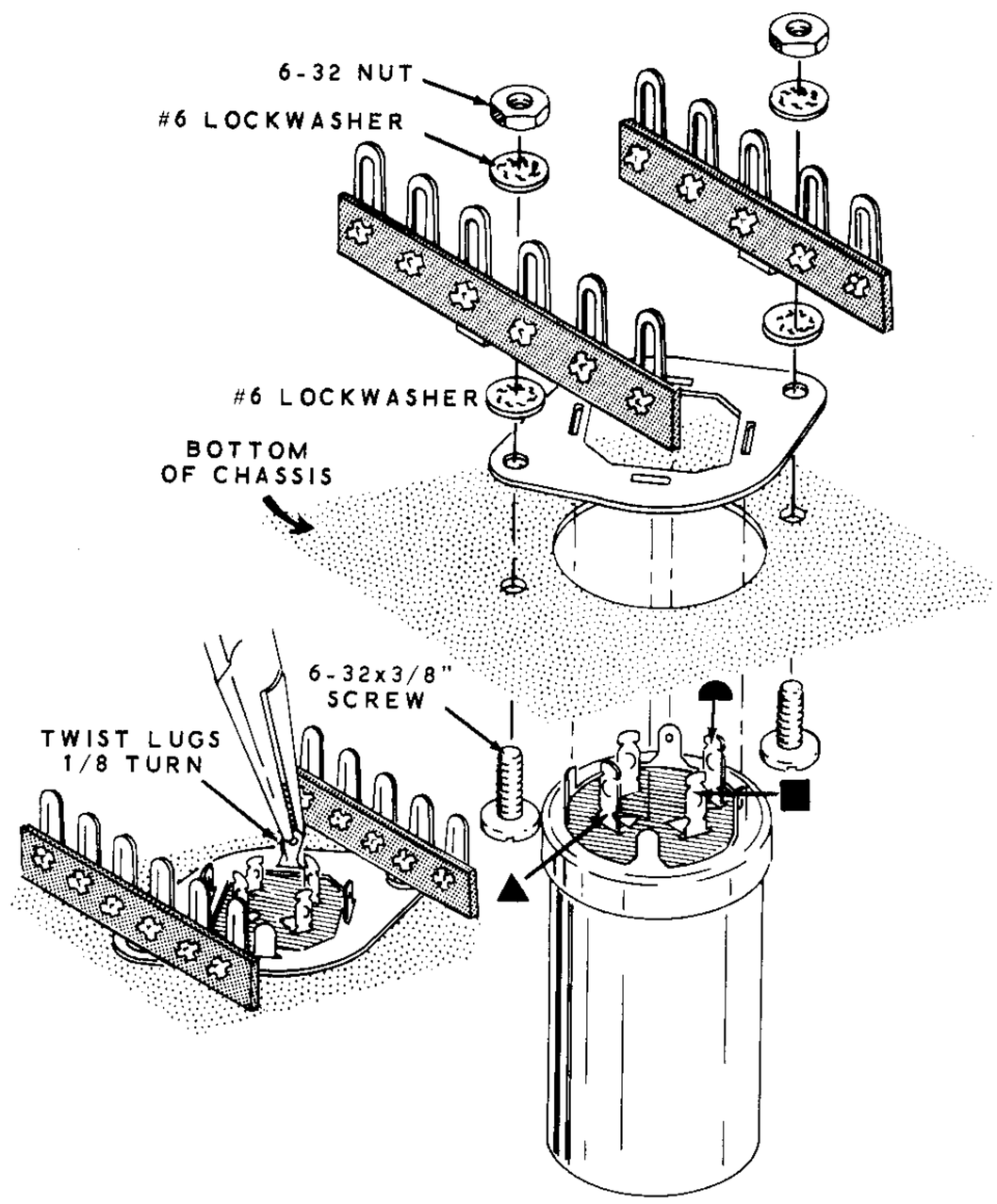

Detail 3-10L

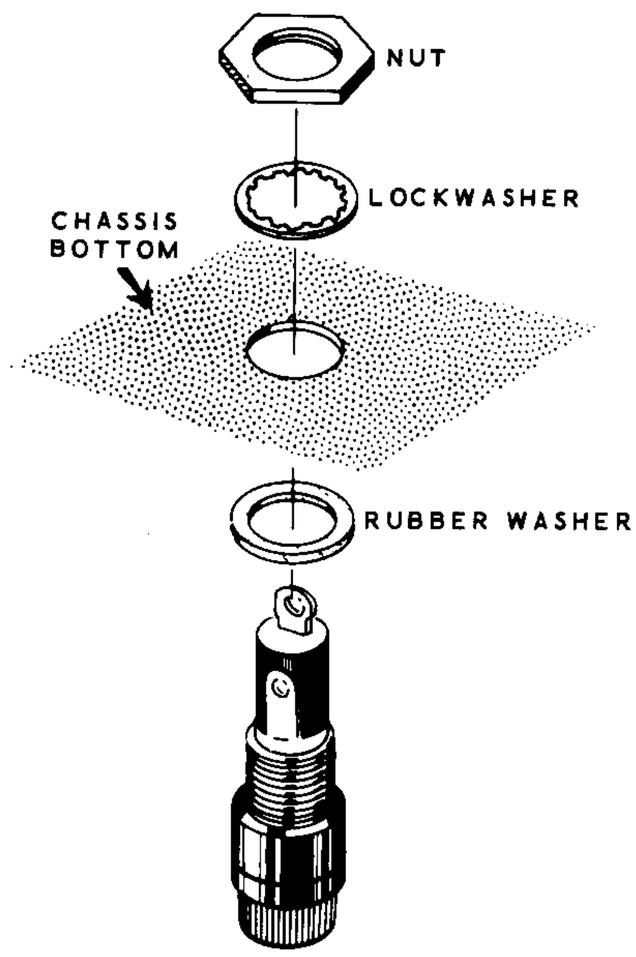

Detail 3-10M

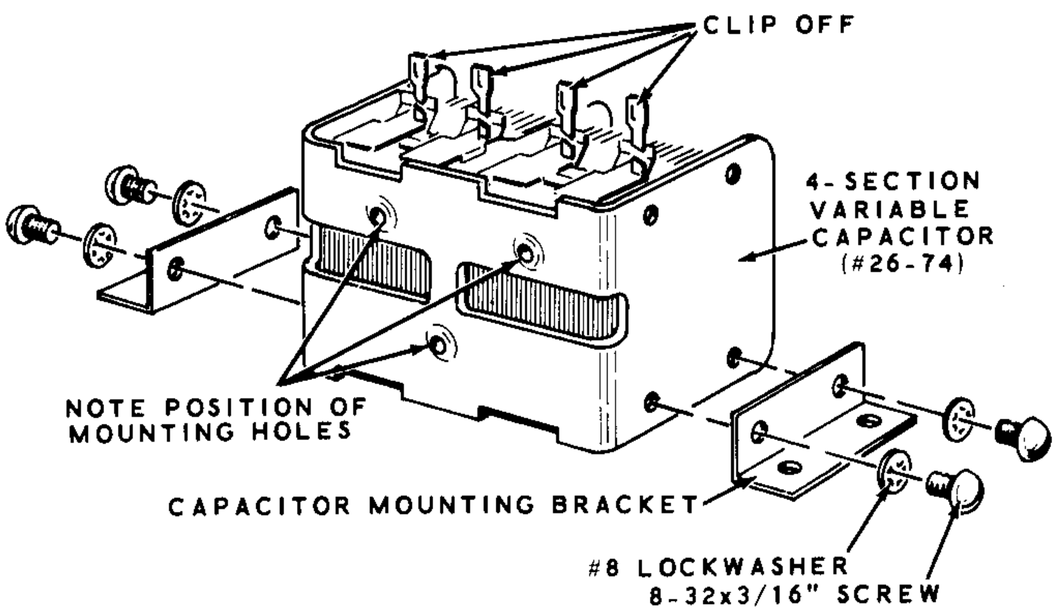

( ) Refer to Detail 3-10N, and cut the proper four lugs from variable capacitor #26-74. Then mount the capacitor mounting brackets on the capacitor, using 8-32 x 3/16" screws and #8 lockwashers.

( ) Refer to Detail 3-10P, and mount the variable capacitor at TG on the top of the chassis, with a small #6 solder lug at B, and the switch mounting bracket at D on the bottom of the chassis. Use 3-48 x 3/8" hardware.

Detail 3-10N

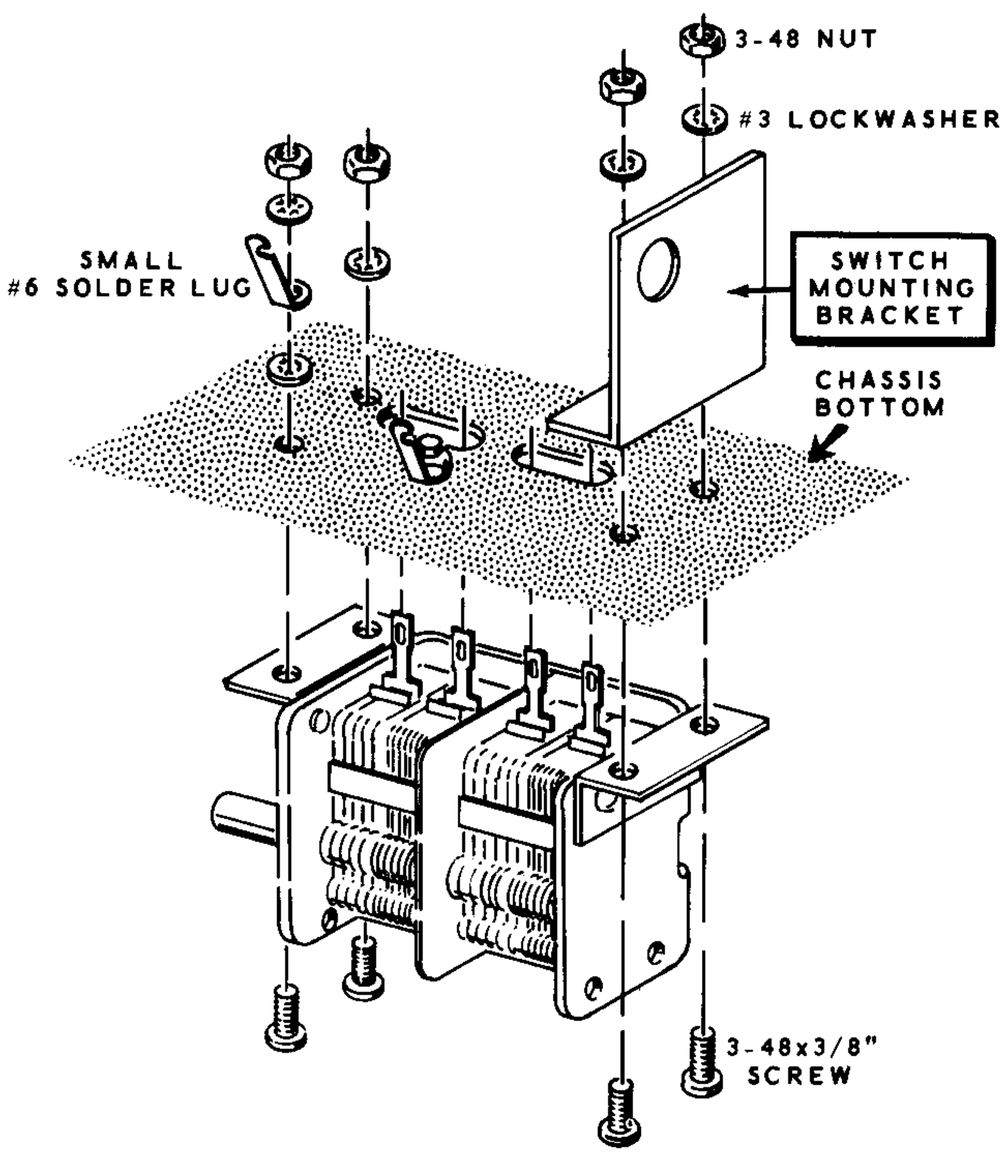

Detail 3-10P

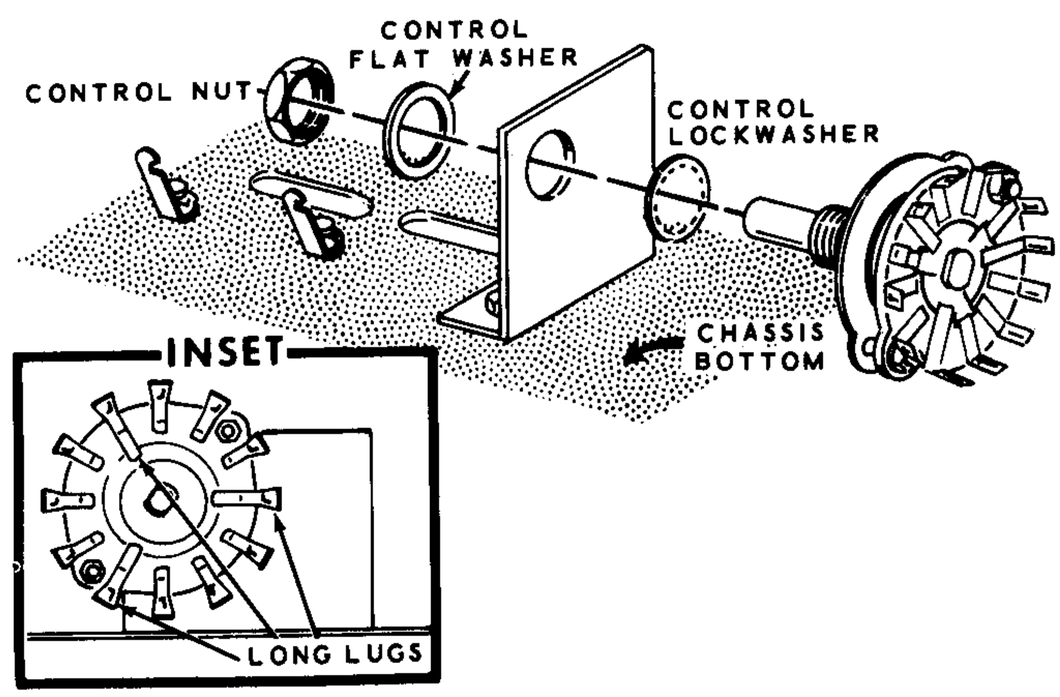

Detail 3-10R

( ) Refer to Detail 3-10R, and mount the 3-position rotary switch (#63-336) on switch mounting bracket D. Use a control lockwasher, a control flat washer, and a control nut. Position the switch as shown in the inset drawing.

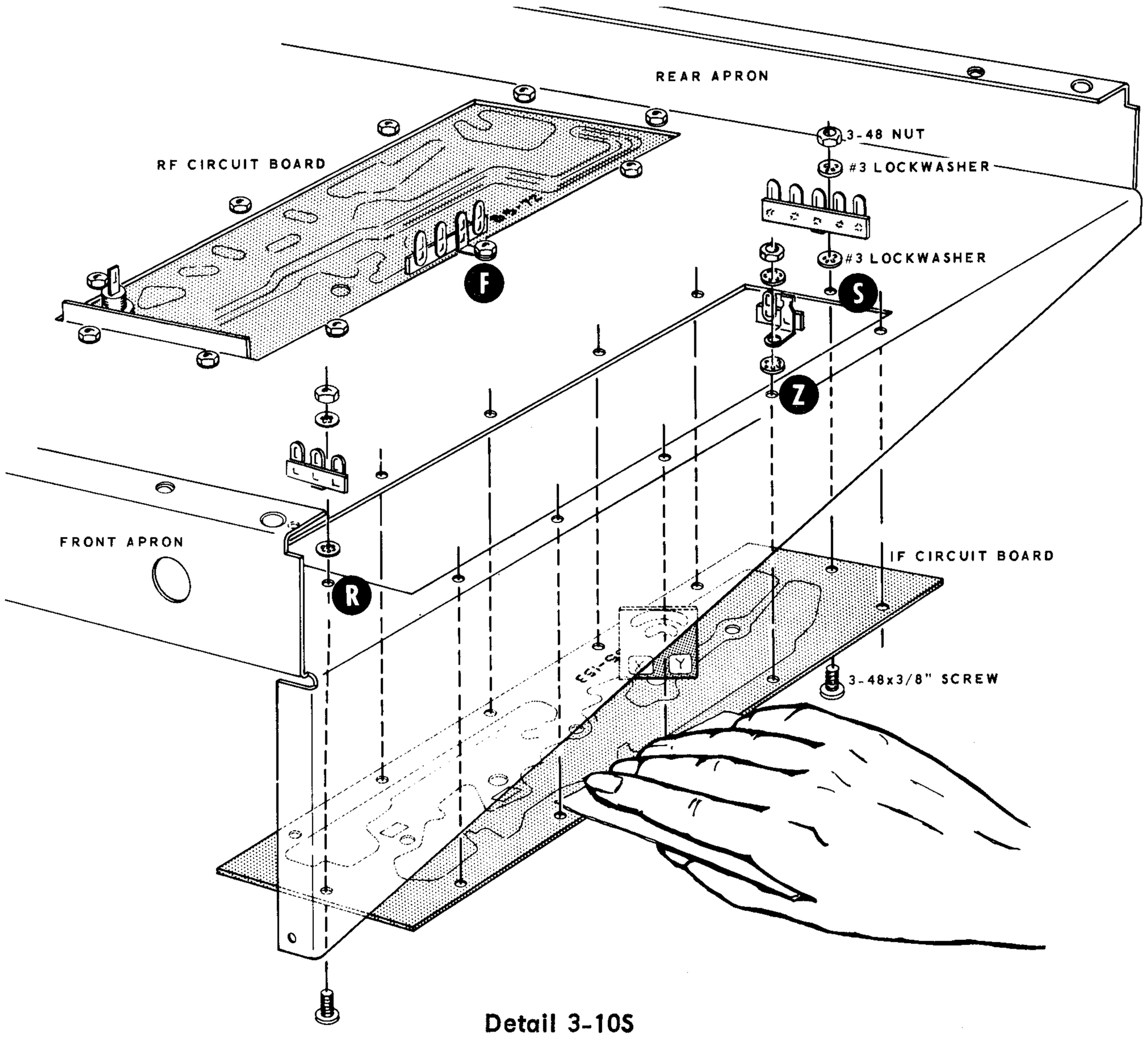

Detail 3-10S

Refer to Detail 3-10S for the following steps.

( ) Using the sandpaper supplied, lightly sand the foil around the outside edge of the circuit boards to remove the lacquer coating and thus permit a good ground connection between the circuit board foil and the chassis.

( ) Mount the IF circuit board (#85-153-1) with a 2-lug miniature terminal strip at Z, a 3-lug terminal strip at R, and a 5-lug terminal strip at S. Use 3-48 x 3/8" hardware.

( ) In a like manner, mount the RF circuit board (#85-72-1) with a 4-lug terminal strip at F. Use 3-48 x 3/8" hardware.

Refer to Pictorial 3-10 for the following steps.

( ) Refer to Detail 3-10T, and mount the 10 KΩ control (#10-202) at FK. Use a control lockwasher, a control flat washer, and a control nut.

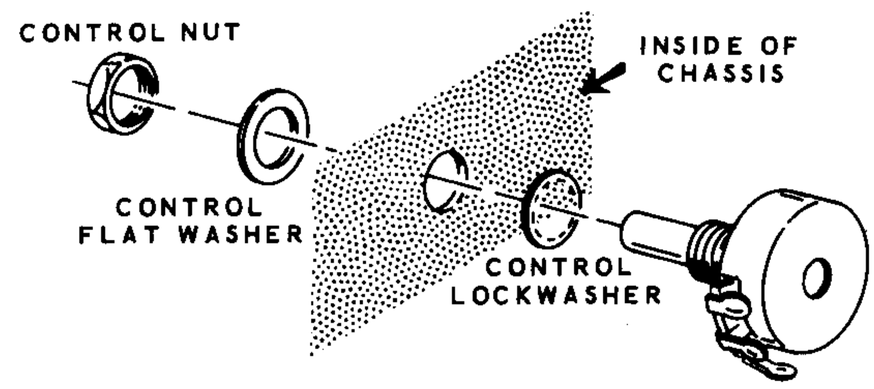

Detail 3-10T

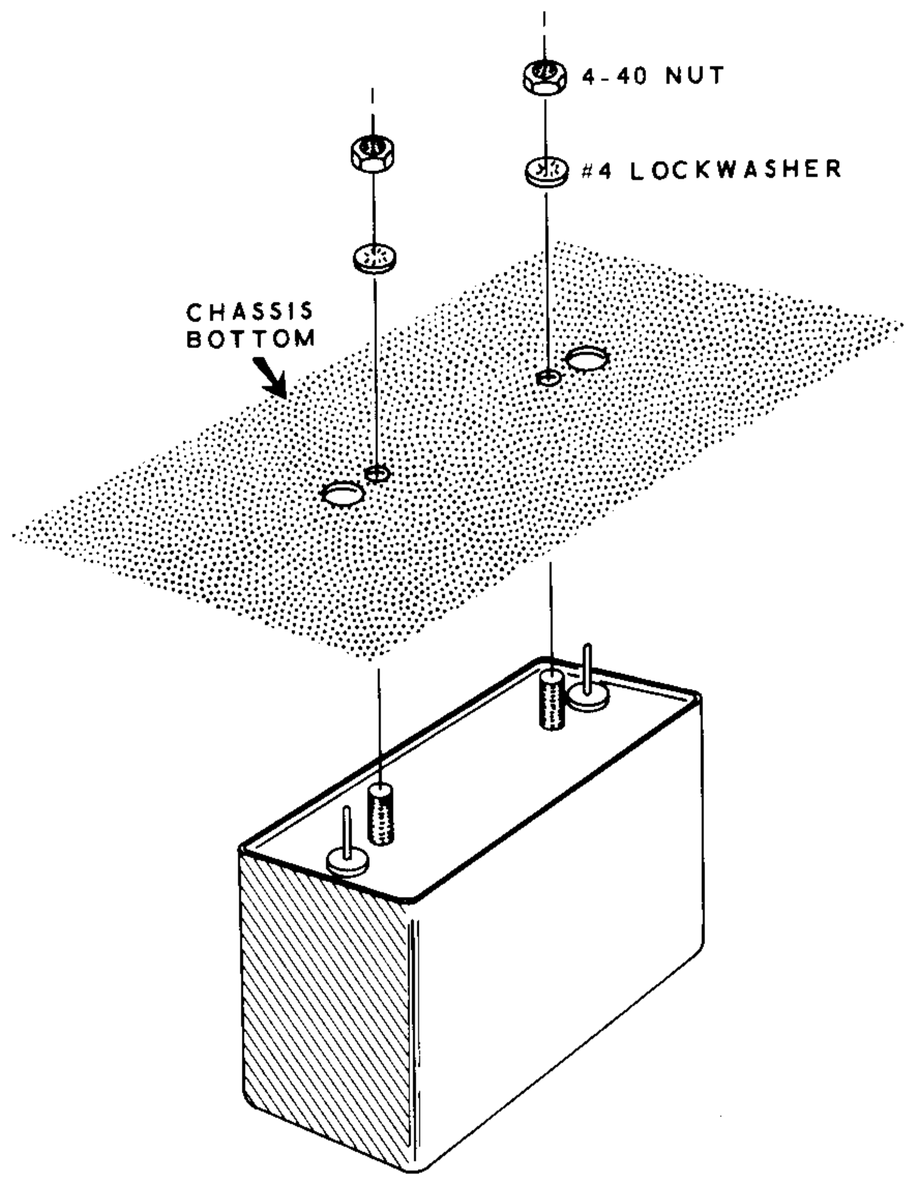

Detail 3-10U

( ) Refer to Detail 3-10U, and mount the 2.1 kHz SSB filter (#404-283) at location FL-1 on top of the chassis. Use #4 lockwashers, and 4-40 nuts.

NOTE: If you have purchased the 3.75 kHz AM crystal filter and/or the 400 Hz crystal filter, they should be installed at this time. Use the same arrangement of hardware as used for the mounting of the SSB filter. Mount the filters at the proper location on the top of the chassis. The necessary hardware is furnished in this kit.

( ) Refer to Detail 3-10W, and cut the leads of the audio output transformer (#51-140) to the indicated lengths. After the leads are cut to length, remove 1/4" of insulation from the end of each lead. Then, if necessary, melt a small amount of solder on the exposed end of each lead to hold the small wire strands together.

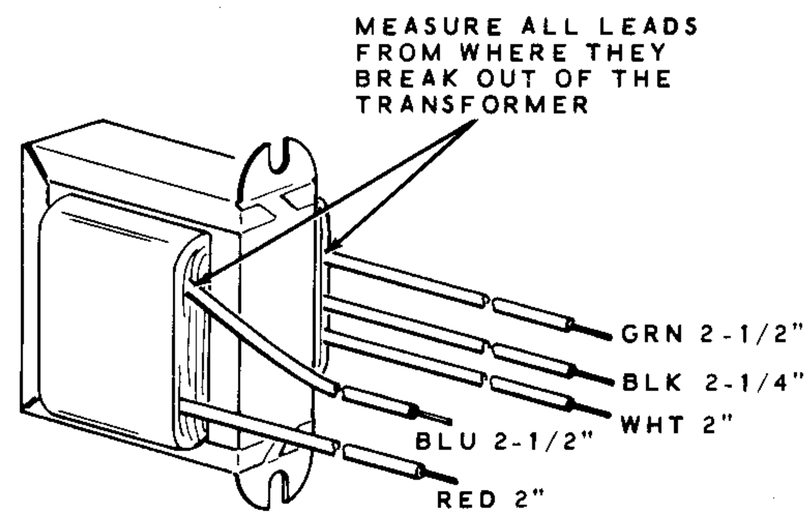

Detail 3-10W

( ) Refer to Detail 3-10X, and cut the leads of the power transformer (#54-146-24) to the indicated lengths. After the leads are cut to length, remove 1/4" of insulation from the end of each lead. Then, if necessary, melt a small amount of solder on the exposed end of each lead to hold the small wire strands together.

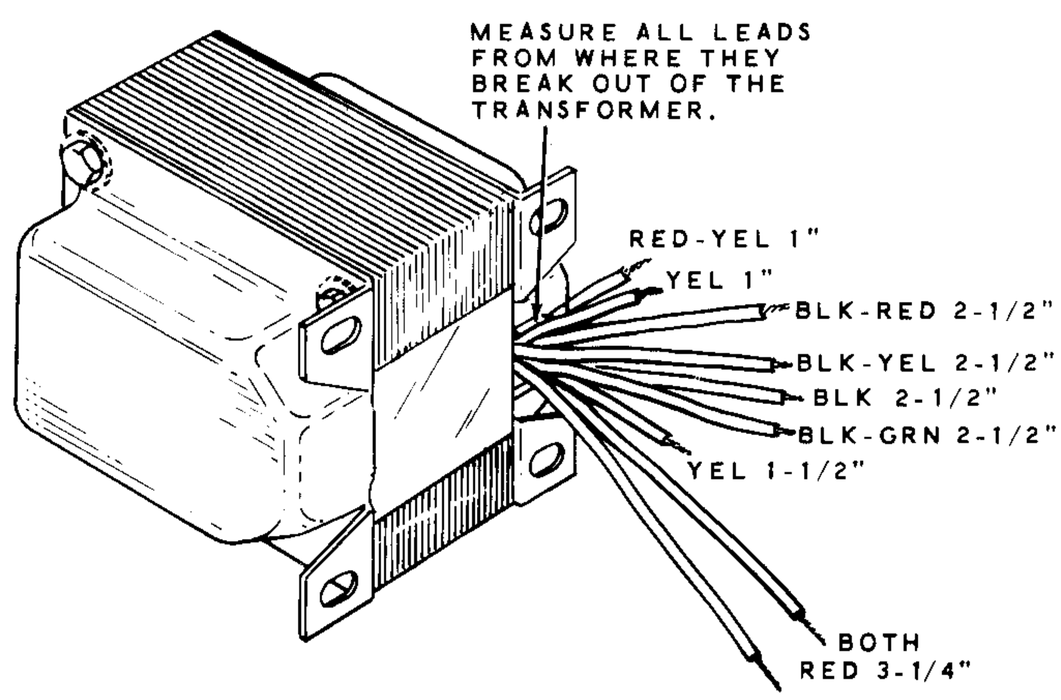

Detail 3-10X

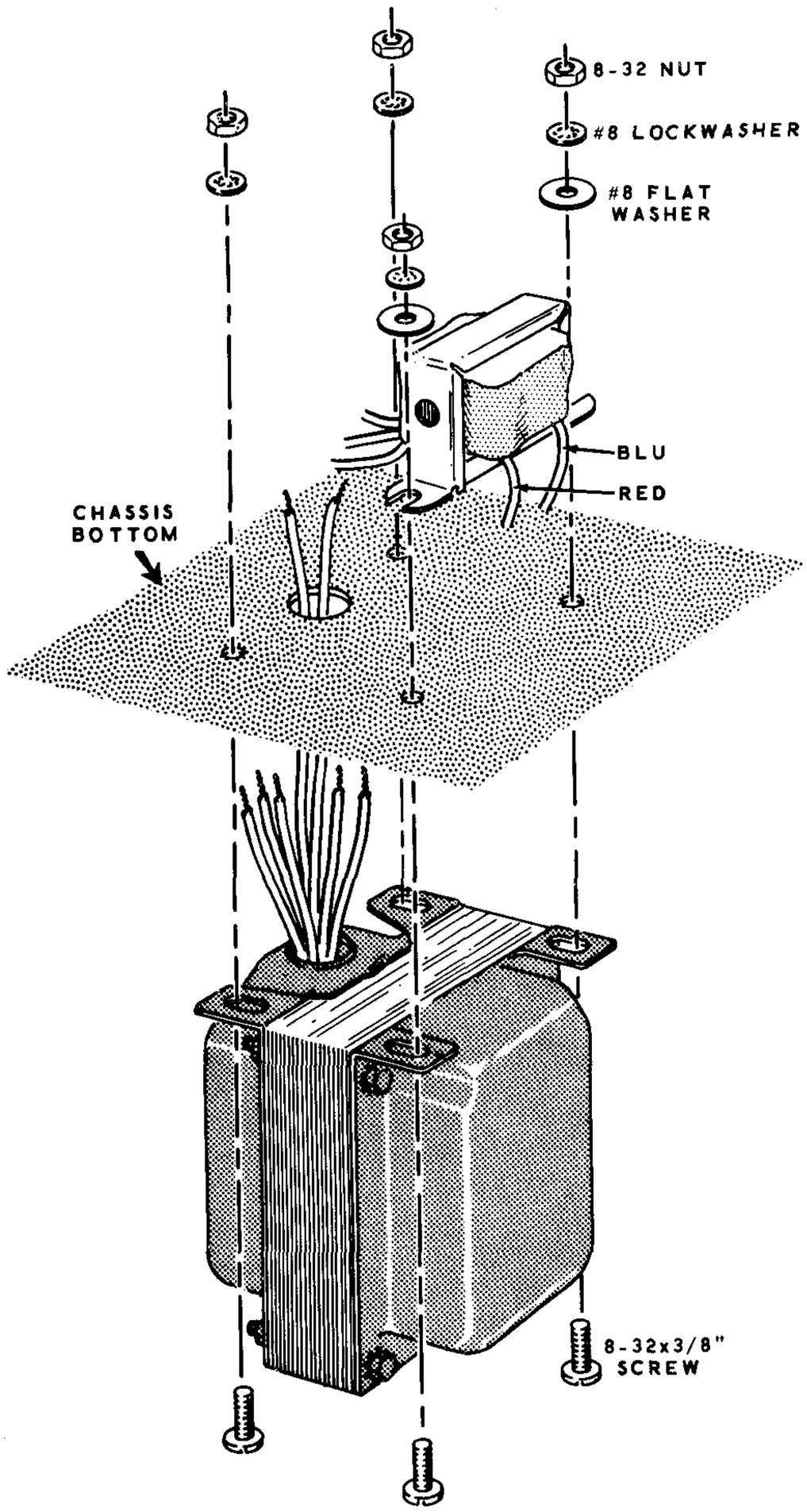

Detail 3-10Y

( ) Refer to Detail 3-10Y, and pass the leads of the power transformer through hole HC. Secure the transformer to the chassis by installing 8-32 x 3/8" hardware in the two mounting holes nearest hole HC. Be sure the other two holes of the transformer line up with the corresponding chassis holes.

( ) Now mount the audio output transformer using 8-32 x 3/8" hardware with #8 flat washers at the other two mounting holes of the power transformer. Be sure to position the leads of the audio output transformer as shown. NOTE: Be certain that the audio output transformer is securely clamped in place and that the nuts are tightened securely.

BOTTOM CHASSIS WIRING

This section of the Manual contains the Parts List and Step-By-Step Assembly instructions for the wiring of the bottom of the chassis.

Parts List #4

Unpack package #4 and check each part against the following Parts List. The numbers in parentheses are keyed to the numbers in the Parts Pictorial. Parts (except for hardware) that have been shown in a previous Parts Pictorial will not be repeated in this Parts Pictorial.

PART No.	PARTS Per Kit	DESCRIPTION
RESISTORS - 1/2 Watt		
1-1	1	47 Ω (yellow-violet-black)
1-66	1	150 Ω (brown-green-brown)
1-6	1	470 Ω (yellow-violet-brown)
1-9	2	1000 Ω (brown-black-red)
1-13	1	2700 Ω (red-violet-red)
1-14	2	3300 Ω (orange-orange-red)
1-20	1	10 KΩ (brown-black-orange)
1-109	1	12 KΩ 5% (brown-red-orange)
1-21	4	15 KΩ (brown-green-orange)
1-132	3	20 KΩ (red-black-orange)
1-24	1	33 KΩ (orange-orange-orange)
1-25	2	47 KΩ (yellow-violet-orange)
1-60	1	68 KΩ (blue-gray-orange)
1-26	1	100 KΩ (brown-black-yellow)
1-33	3	470 KΩ (yellow-violet-yellow)
1-86	1	5.6 megohm (green-blue-green)
Other Resistors		
(1) 1-3-1	1	3300 Ω 1 watt (orange-orange-red)
(2) 1-20-2	1	100 Ω 2 watt (brown-black-brown)
1-16-2	1	330 Ω 2 watt (orange-orange-brown)
1-3-2	1	10 KΩ 2 watt (brown-black-orange)
CAPACITORS		
Mica		
20-52	1	7.5 pf
20-100	1	30 pf
20-97	1	50 pf
20-102	1	100 pf
20-105	1	180 pf
Disc		
21-78	1	5 pf
21-56	2	470 pf
21-14	2	.001 μfd
21-72	2	.005 μfd 1.4 KV
21-16	9	.01 μfd

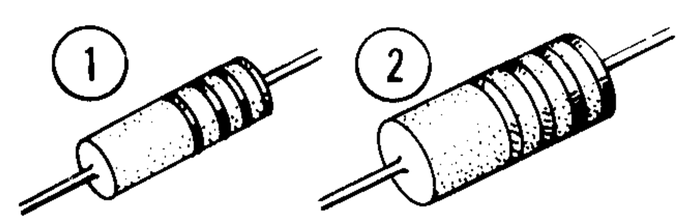

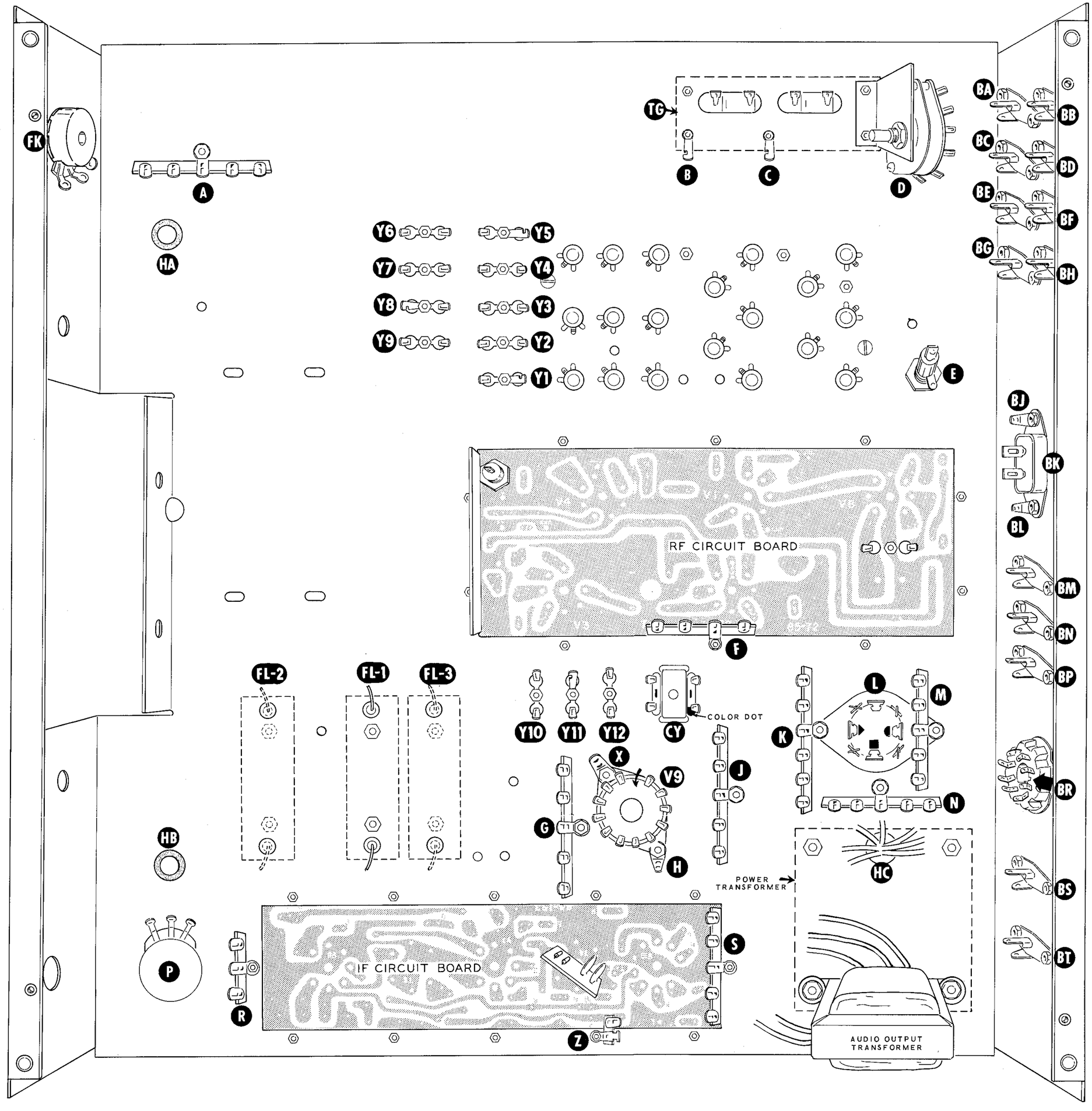

PICTORIAL 3-10

PART No.	PARTS Per Kit	DESCRIPTION
Other Capacitors		
(3) 25-54	1	10 μfd 15 V electrolytic
25-147	3	10 μfd 150 V electrolytic
27-34	1	.2 μfd Mylar*
GENERAL		
(4) 40-546	1	8.5 MHz trap coil
(5) 45-51	1	15 μh choke
(6) 57-27	3	Silicon diode
63-422	1	9-position 6-wafer rotary switch
63-423	1	5-position 4-wafer rotary switch
134-137	1	Cable harness (large)
134-143	1	Wire harness (small)
(7) 250-56	4	6-32 x 1/4" screw
(8) 250-276	4	6-32 x 3/8" flat head screw
(9) 251-1	2	6-32 spade bolt
(10) 252-3	8	6-32 nut
(11) 254-1	9	#6 lockwasher
(12) 254-5	2	Control lockwasher
(13) 259-1	1	Large #6 solder lug
(14) 436-21	1	Phone jack
ITEMS FROM PACK #5		
(15) 204-560	2	Chassis rail
(16) 206-316	1	Switch shield

*DuPont Registered Trademark.

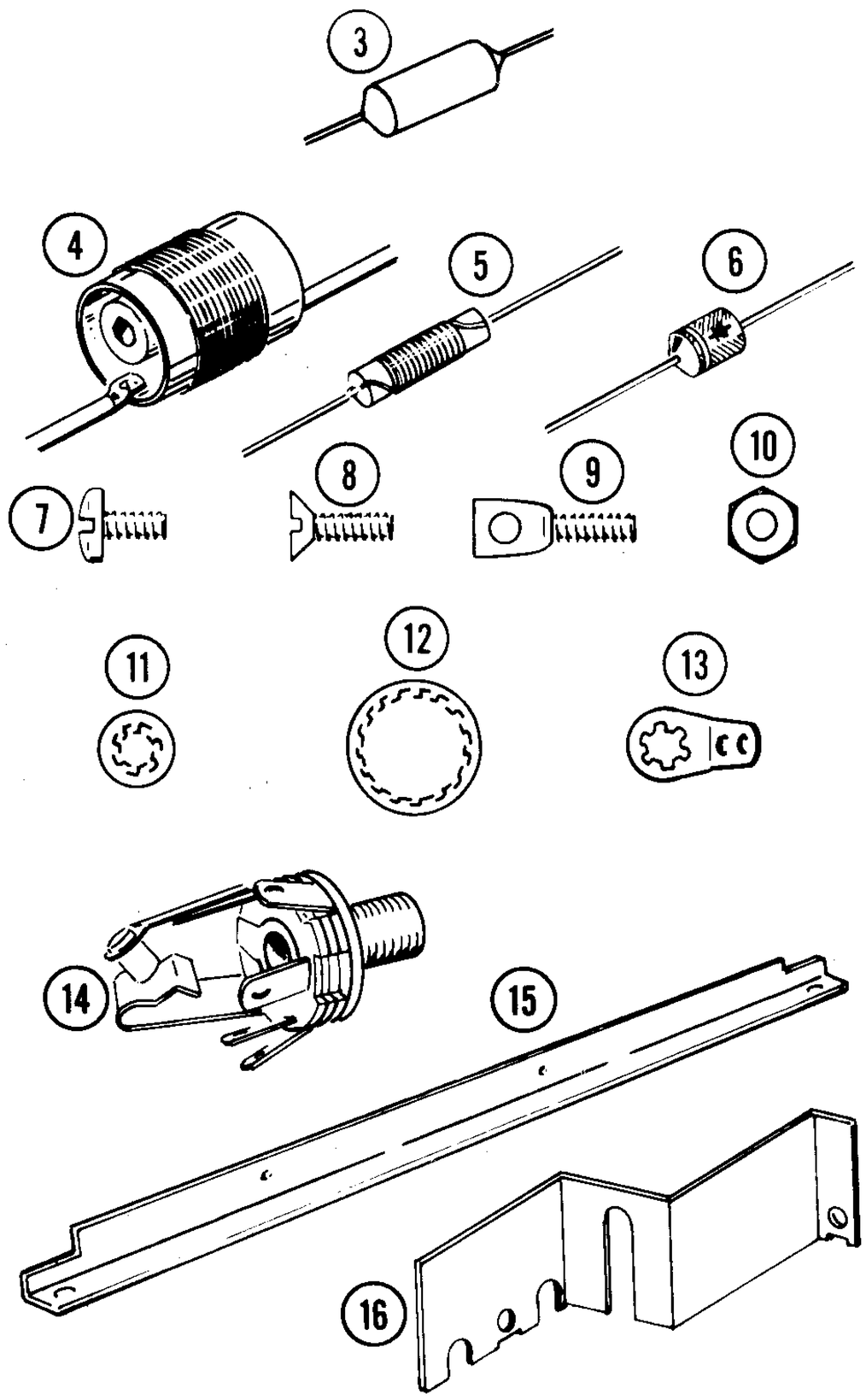

STEP-BY-STEP ASSEMBLY

To obtain the best possible performance from your Receiver, it should be wired neatly. Position all wires and components as shown. Whenever possible, the wires should be positioned against the chassis.

Refer to Pictorial 4-1 (fold-out from Page 36) for the following steps.

POINT-TO-POINT WIRING

NOTE: The chassis can be made to set more level by placing one or two books under the rear corner nearest switch D. This will make the chassis easier to wire.

( ) Prepare the following lengths of hookup wire:

COLOR	LENGTH
Brown	7-1/4"
Brown	3-1/4"
Brown	3-3/4"
Brown	4"
Red	6-3/4"
Yellow	6-1/2"
Brown	6"
Black	6"

( ) Connect a 7-1/4" brown wire between holes D(S-1) and O (S-1) on the RF circuit board.

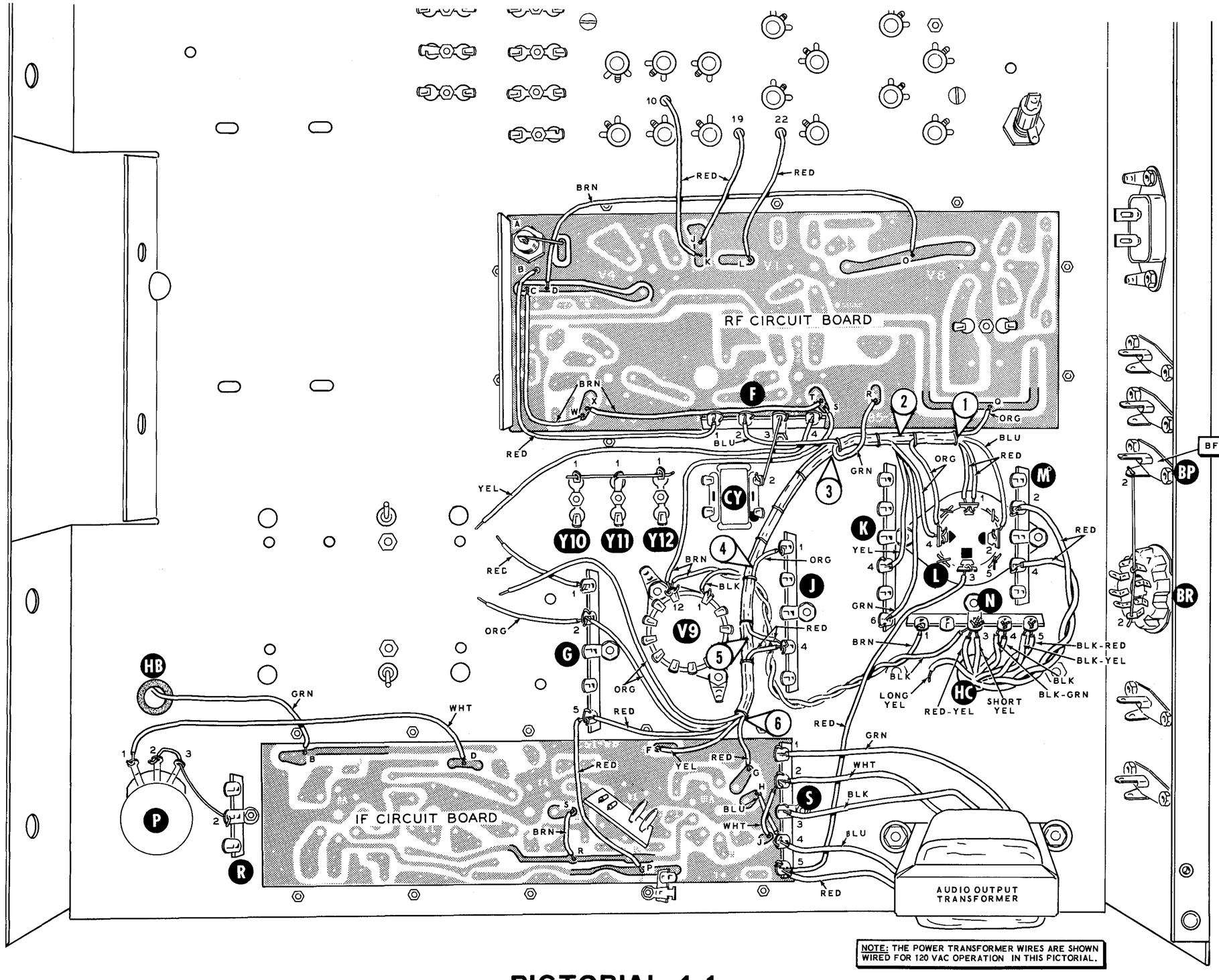

PICTORIAL 4-1

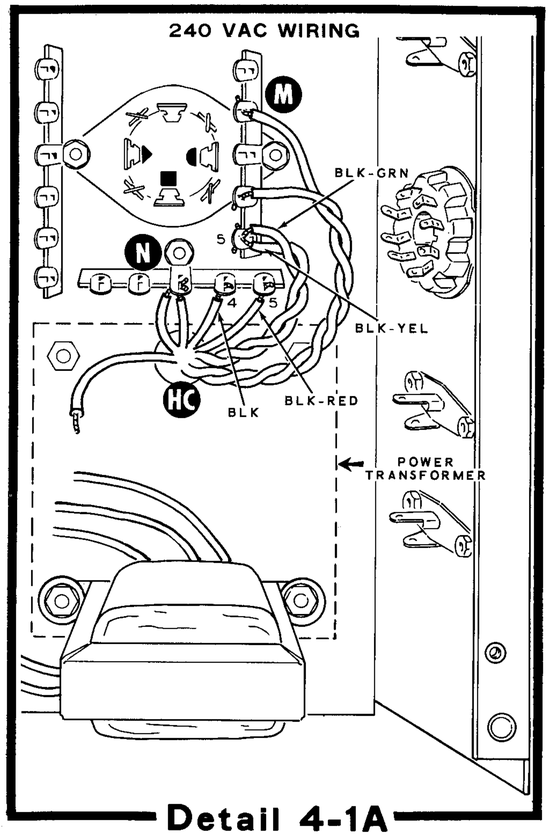

Detail 4-1A

( ) Connect the free end of the bare wire extending from the RF circuit board to banana jack A (S-1).

( ) Connect the free end of the red wire extending from hole 10 of the chassis to hole K in the RF circuit board (S-1).

( ) Connect the free end of the red wire extending from hole 19 of the chassis to hole J in the RF circuit board (S-1).

( ) Connect the free end of the red wire extending from hole 22 of the chassis to hole L in the RF circuit board (S-1).

( ) Connect a 3-1/4" brown wire between holes C (S-1) and W (S-1) of the RF circuit board.

( ) Connect a 3-3/4" brown wire between holes X (S-1) and T (S-1) of the RF circuit board.

( ) Connect a 4" brown wire from hole S in the RF circuit board (S-1) to lug 12 of tube socket V9 (NS).

( ) Connect one end of a 6-3/4" red wire to lug 1 of terminal strip F (NS). Pass the other end of this wire through hole B of the RF circuit board for connection later.

( ) Connect one end of a 6-1/2" yellow wire to lug 4 of terminal strip F (NS). Position the other end of the wire as shown, to be connected later.

( ) Twist together a 6" brown and a 6" black wire to form a twisted pair having approximately 3-turns per inch.

( ) At one end of this twisted pair, connect the brown wire to lug 12 (S-2) and the black wire to lug 1 (S-1) of tube socket V9.

( ) At the other end of the twisted pair, connect the brown wire to lug 1 (NS) and the black wire to lug 3 (NS) of terminal strip N.

( ) Pass a 1-1/2" bare wire through lug 1 of the crystal socket Y10 (S-1), and through lug 1 of crystal socket Y11 (S-3), to lug 1 of crystal socket Y12 (NS). Twist the lugs as shown. Be sure the solder lug is soldered to lug 1 of crystal socket Y11.

( ) Connect a 1-1/4" bare wire from lug 3 of terminal strip F (NS) to lug 2 of coil CY (NS).

( ) Pass one end of a 2" bare wire through lug 7 (S-2) to lug 2 (S-1) of octal socket BR. Connect the other end of this wire to lug 2 of phono socket BP (NS).

( ) Prepare the following lengths of hookup wire:

COLOR	LENGTH
Red	5"
Blue	1-1/4"
White	1-1/4"
Brown	1-1/2"
Red	3"
Red	3"
Orange	2-1/2"
Green	3-1/2"
White	5-1/2"

( ) Connect a 5" red wire from lug 3 of capacitor L (NS) to lug 5 of terminal strip S (NS).

( ) Solder lug 5 of capacitor L to the capacitor mounting wafer (S-1).

( ) Connect a 1-1/4" blue wire from hole H in the IF circuit board (S-1) to lug 4 of terminal strip S (NS).

( ) Connect a 1-1/4" white wire from hole J in the IF circuit board (S-1) to lug 2 of terminal strip S (NS).

( ) Connect a 1-1/2" brown wire between holes R (S-1) and S (S-1) in the IF circuit board.

( ) Connect a 3" red wire from lug 5 of terminal strip G (NS) to hole P in the IF circuit board (S-1).

( ) Connect one end of a 3" red wire to lug 1 of terminal strip G (NS). The other end will be connected later.

( ) Connect one end of a 2-1/2" orange wire to lug 2 of terminal strip G (NS). The other end will be connected later.

( ) Connect one end of a 3-1/2" green wire to hole B in the IF circuit board (S-1). Pass the other end of this wire through hole HB to be connected later.

( ) Pass one end of a 1-3/4" bare wire through lug 3 (NS) to lug 2 (S-1) of control P. Connect the other end of this wire to lug 2 of terminal strip R (S-1).

( ) Connect a 5-1/2" white wire from lug 1 of control P (S-1) to hole D in the IF circuit board (S-1).

TRANSFORMER WIRING

( ) Connect the leads of the power transformer, extending from hole HC, as follows:

( ) Short yellow to lug 3 of terminal strip N (NS).

( ) Red-yellow to lug 3 of terminal strip N (NS).

( ) Twist the two red leads together as shown. Connect either lead to lug 2 (NS) and the other lead to lug 4 (NS) of terminal strip M.

The long yellow lead will be connected later.

Alternate Line Voltage Wiring

Two sets of line voltage wiring instructions are given below, one for 120 VAC line voltage and the other for 240 VAC line voltage. In the U.S.A., 120 VAC is most often used, while in foreign countries 240 VAC is more common. USE ONLY THE INSTRUCTIONS THAT AGREE WITH THE LINE VOLTAGE IN YOUR AREA.

120 VAC WIRING

( ) Twist together the black and black-green leads. Then connect both to lug 4 of terminal strip N (NS).

( ) Twist together the black-red and black-yellow leads. Then connect both to lug 5 of terminal strip N (NS).

Now proceed to the Harness And Component Wiring.

240 VAC WIRING

Refer to Detail 4-1A (fold-out from Page 36) for the following steps.

( ) Connect the black lead to lug 4 of terminal strip N (NS).

( ) Connect the black-red lead to lug 5 of terminal strip N (NS).

( ) Twist together the black-yellow and black-green leads. Then connect both to lug 5 of terminal strip N (S-2).

HARNESS AND COMPONENT WIRING

Connect the leads of the audio output transformer to terminal strip S as follows:

( ) Green to lug 1 (NS).

( ) White to lug 2 (NS).

( ) Black to lug 3 (NS).

( ) Blue to lug 4 (NS).

( ) Red to lug 5 (NS).

Position the small wire harness (#134-143) on the chassis as shown in the Pictorial, and connect the wires from BO#1 as follows:

( ) Both red to lug 1 of capacitor L (NS).

( ) Blue to lug 2 of capacitor L (NS).

( ) Orange to hole Q in the RF circuit board (S-1).

Connect the wires from BO#2 of the wire assembly as follows:

( ) Both orange to lug 4 of capacitor L (NS).

( ) Yellow to lug 4 of terminal strip K (NS).

( ) Green to lug 6 of terminal strip K (NS).

Connect the wires from BO#3 of the cable ssembly as follows:

( ) Green to hole R in the RF circuit board (S-1).

( ) Blue to lug 2 of terminal strip F (NS). Position this wire under the bare wire going to lug 3 of terminal strip F.

( ) Connect the orange wire from BO#4 of the wire assembly to lug 1 of terminal strip J (NS).

( ) Connect both red wires from BO#5 of the wire assembly to lug 4 of terminal strip J (NS).

Connect the wires from BO#6 of the wire assembly as follows:

( ) Short red to hole G in the IF circuit board (S-1).

( ) Yellow to hole F in the IF circuit board (S-1).

( ) Long red to lug 5 of terminal strip G (NS).

( ) Short orange to lug 2 of terminal strip G (NS).

( ) Position the long orange as shown, to be connected later.

Refer to Pictorial 4-2 for the following steps.

( ) Locate the large cable harness (#134-137) and unfold it.

( ) Melt a small amount of solder on the exposed end of the inner lead of each coaxial cable in the cable harness.

NOTE: Do not shorten any of the wires in the harness. If a wire is too long, bend the extra length back along the main trunk of the cable harness.

( ) Position the cable harness on the bottom of the chassis, shaping it as shown. Then pass the brown wire, yellow wire, white wire, two blue wires, and the two-wire shielded cable from BO#2 through hole HB for connection later. Refer to Detail 4-7F (on Page 51) for the position of the harness along the end of the chassis.

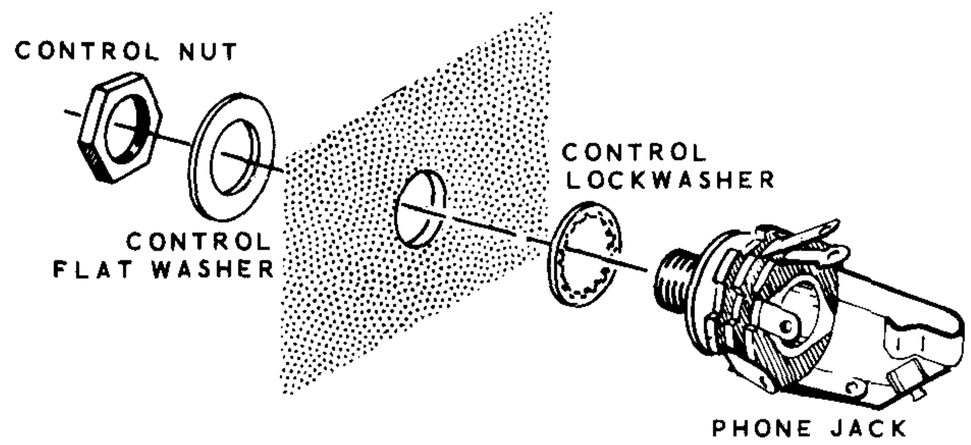

Detail 4-2A

( ) Refer to Detail 4-2A, and mount the phone jack at FG. Use a control lockwasher, control flat washer, and a control nut.

( ) Connect a 1-3/4" white wire from lug 1 of phone jack FG (S-1) to lug 3 of terminal strip R (NS).

NOTE: The coaxial cables may be marked with a color band, color stripe, or color tape.

Connect the wires from BO#2 as follows:

( ) White-yellow to hole A in the IF circuit board (S-1).

CAUTION: The inner insulation of the coaxial cables can be melted easily. It is suggested that when a shield is soldered, it should be gripped with a pair of long nose pliers between the connection and the cable. This will serve as a heat sink to prevent a short circuit in the cable. A rubber band can be placed around the handle of the pliers to hold them in place, to leave both hands free to perform the soldering.

( ) Red coaxial cable: inner lead to lug 1 of terminal strip R (NS), and the shield to lug 3 of control P (S-3).

( ) Orange coaxial cable: inner lead to lug 4 (S-1) and the shield to lug 2 (NS) of phone jack FG.

( ) Gray coaxial cable: inner lead to lug 3 (S-1) and the shield to lug 2 (S-2) of phone jack FG.

The white coaxial cable from BO#2 will be connected later.

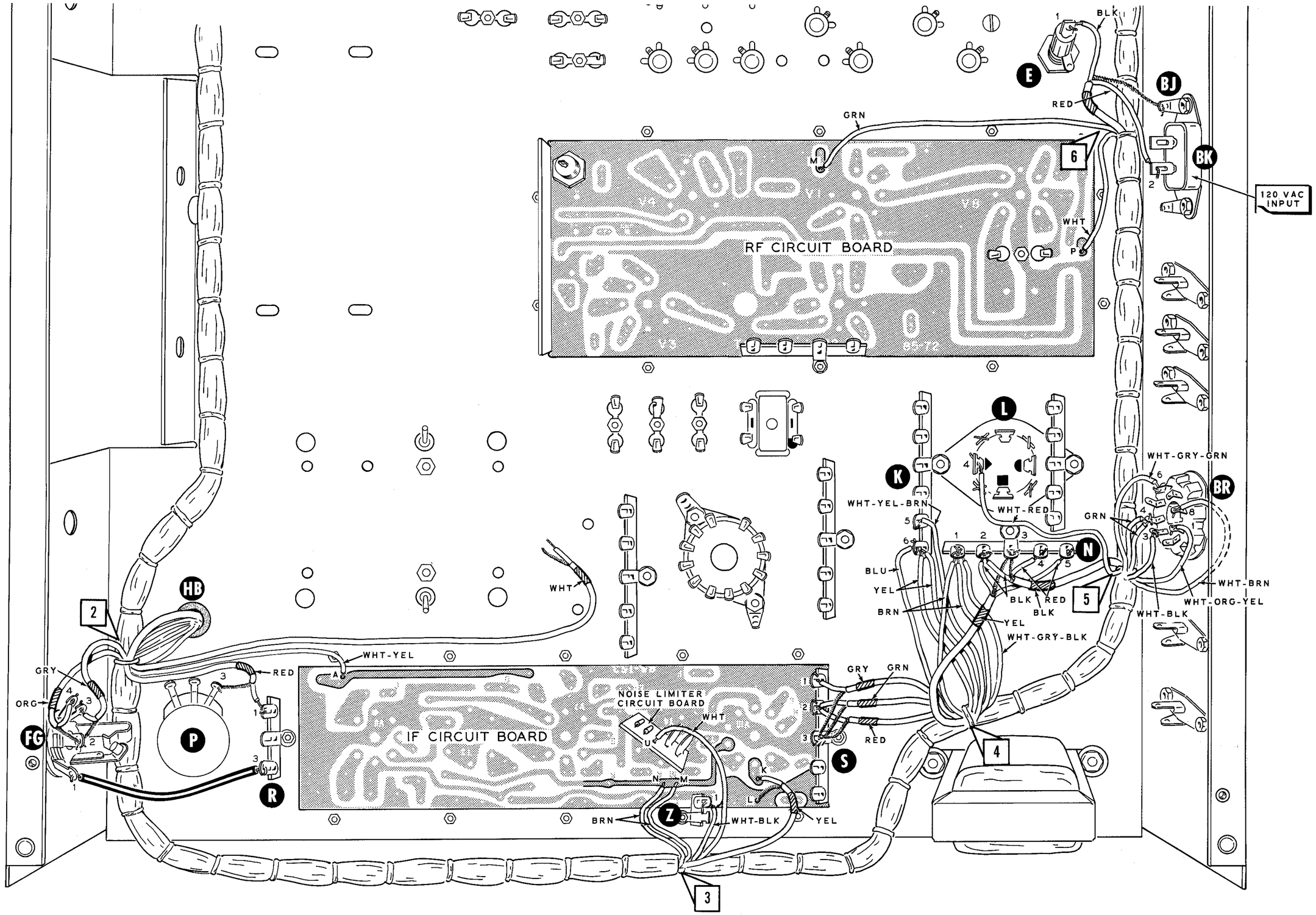

PICTORIAL 4-2

Connect the wires from BO#3 as follows:

( ) White-black to lug 1 of terminal strip Z (NS).

( ) White to hole U in the noise limiter circuit board (S-1).

( ) Either brown to hole N in the IF circuit board (S-1).

( ) Other brown to hole M in the IF circuit board (S-1).

( ) Yellow coaxial cable: inner lead to hole K (S-1) and the shield to hole L (S-1) in the IF circuit board.

Connect the wires from BO#4 as follows:

( ) Red coaxial cable: inner lead to lug 2 (NS) and the shield to lug 3 (NS) of terminal strip S.

( ) Green coaxial cable: inner lead to lug 2 (S-4) and the shield to lug 3 (NS) of terminal strip S.

( ) Gray coaxial cable: inner lead to lug 1 (S-2) and the shield to lug 3 (S-4) of terminal strip S.

( ) Blue to lug 6 of terminal strip K (NS).

( ) Both yellow to lug 6 of terminal strip K (NS).

( ) White-yellow-brown to lug 5 of terminal strip K (NS).

( ) Both brown to lug 1 of terminal strip N (NS).

( ) White-gray-black to lug 1 of terminal strip N (NS).

( ) Yellow two-wire shielded cable: black to lug 2 (NS) and the shield to lug 3 (NS) of terminal strip N; red to lug 5 of terminal strip N (S-3) (S-2 for 240 VAC operation).

Connect the wires from BO#5 as follows:

( ) Black two-wire shielded cable: black to lug 2 (S-2) and the shield to lug 3 (S-5), and the red to lug 4 (S-2) of terminal strip N.

( ) White-gray-green to lug 6 of socket BR (S-1).

( ) White-red to lug 4 of capacitor L (NS).

( ) Both green to lug 4 of octal socket BR (S-2).

( ) White-black to lug 3 of octal socket BR (S-1).

( ) White-orange-yellow to lug 1 of socket BR (S-1).

( ) White-brown to lug 8 of socket BR (S-1).

Connect the wires from BO#6 as follows:

( ) White to hole P in the RF circuit board (S-1).

( ) Green to hole M in the RF circuit board (S-1).

( ) Two-wire shielded cable: shield to solder lug BJ (NS), black to lug 1 of fuseholder E (S-1), and red to lug 2 of AC socket BK (NS).

Refer to Pictorial 4-3 (fold-out from Page 43) for the following steps.

( ) At BO#1 of the cable harness, pass the white coaxial cable, the brown wire, the white wire, and the white-black wire through hole HA for connection later.

Connect the wires from BO#1 as follows:

( ) White-yellow-brown to lug 1 of control FK (S-1).

( ) Green to lug 1 of terminal strip A (NS).

( ) White-yellow to lug 1 of terminal strip A (NS).

( ) Blue to lug 2 of terminal strip A (NS).

( ) Yellow coaxial cable: inner lead to lug 4 (NS) and the shield to lug 3 (NS) of terminal strip A.

NOTE: Use the small coaxial cable in all steps unless the large coaxial cable is specifically called for.

( ) Refer to Detail 4-3A, and prepare the ends of a 5-1/2" coaxial cable.

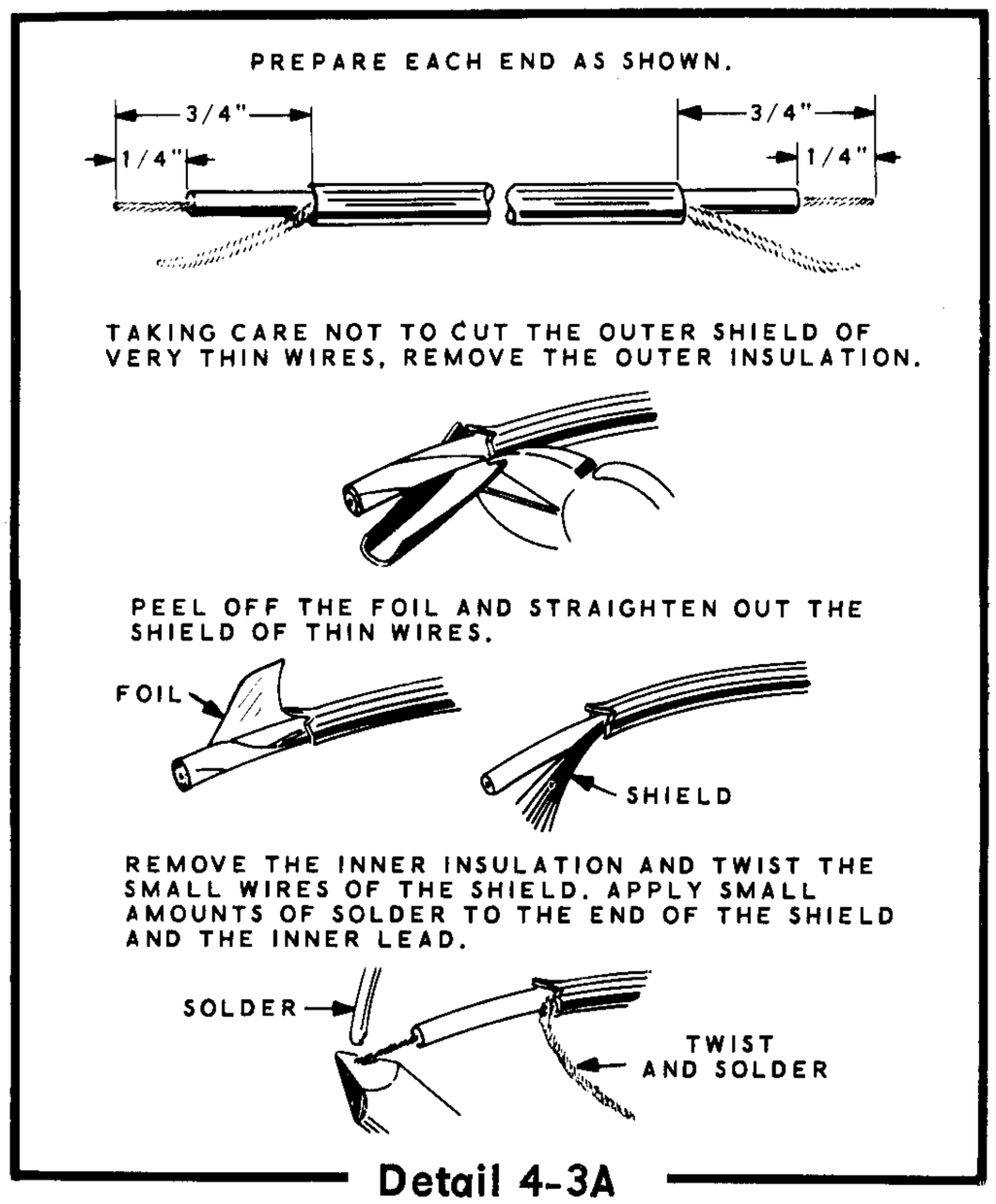

Detail 4-3A

( ) At one end of the prepared cable, connect the inner lead to lug 5 (NS) and the shield to lug 3 (NS) of terminal strip A. Pass the other end of the cable through hole HA to be connected later.

( ) Connect a 5.6 megohm (green-blue-green) resistor from lug 2 of control FK (S-1) to lug 1 of terminal strip A (S-3).

( ) Connect a 47 Ω (yellow-violet-black) resistor from lug 3 of control FK (S-1) to lug 2 of terminal strip A (NS).

( ) Connect a 20 KΩ (red-black-orange) resistor between lugs 2 (NS) and 3 (NS) of terminal strip A.

( ) Connect a .2 μfd Mylar capacitor between lugs 2 (S-4) and 3 (S-4) of terminal strip A. Note the position of the banded end.

( ) Connect a .001 μfd disc capacitor between lugs 4 (S-2) and 5 (S-2) of terminal strip A.

( ) Twist the number 1 lugs of crystal sockets Y6 through Y9 as shown.

( ) Pass a 2" bare wire through lug 1 of crystal socket Y6 (S-1), through lug 1 of crystal socket Y7 (S-2), and through lug 1 of crystal socket Y8 (S-3) to lug 1 of crystal socket Y9 (S-1). Be sure the solder lug at crystal socket Y8 is soldered to lug 1 of the socket.

( ) Twist the number 2 lugs of crystal sockets Y1 through Y5 as shown.

( ) Pass a 2-1/2" bare wire through lug 2 of crystal socket Y5 (S-2), through lug 2 of crystal socket Y4 (S-2), through lug 2 of crystal socket Y3 (S-2), and through lug 2 of crystal socket Y2 (S-2) to lug 2 of crystal socket Y1 (NS). Be sure the solder lug at crystal socket Y5 is soldered to lug 2 of the socket.

Connect the wires from BO#7 of the cable harness as follows:

( ) Green coaxial cable: inner lead to lug 1 of phono socket BG (S-1), and the shield to lug 2 of phono socket BE (S-1).

( ) Orange coaxial cable: inner lead to lug 1 of phono socket BH (S-1), and the shield to lug 2 of phono socket BF (S-1).

( ) Yellow to lug 1 of phono socket BE (S-1).

( ) White-gray-green to lug 12 of switch D (S-1).

( ) White-red to lug 11 of switch D (S-1).

( ) White-orange-yellow to lug 5 of switch D (S-1).

( ) White-brown to lug 4 of switch D (S-1).

( ) White-gray-black to lug 3 of switch D (S-1).

( ) White-black to lug 1 of switch D (S-1).

( ) Connect a 1-1/4" bare wire from lug 10 of switch D (S-1) to lug 1 of phono socket BA (S-1).

( ) Connect a 1-3/4" bare wire from lug 9 of switch D (S-1) to lug 1 of phono socket BD (S-1).

( ) Connect a 1-1/4" bare wire from lug 8 of switch D (S-1) to lug 1 of phono socket BC (S-1).

Refer to Detail 4-3B for the following steps.

Make the following connections on the front of wafer #4 on the 9-position 6-wafer rotary switch (#63-422, to be mounted at FJ).

( ) Connect a 3/4" bare wire between lugs 11 (S-1) and 12 (NS).

( ) Pass a 1-1/2" bare wire through lug 5 (S-1), lug 4 (S-2), and lug 3 (S-2) to lug 2 (NS).

Make the following connections on the front of wafer #5.

( ) Connect a 3/4" bare wire between lugs 11 (S-1) and 12 (NS).

( ) Pass a 1-1/2" bare wire through lug 5 (S-1), lug 4 (S-2), and lug 3 (S-2) to lug 2 (NS).

Make the following connections to the rear of wafer #6.

( ) Connect a 3/4" bare wire between lugs 11 (NS) and 12 (S-1).

( ) Pass a 1-1/2" bare wire through lug 5 (S-1), lug 4 (S-2), and lug 3 (S-2) to lug 2 (NS).

( ) Install the 9-position 6-wafer rotary switch at FJ. Use a contro lockwasher on the switch bushing, with a 6-32 x 1/4" screw and #6 lockwasher at HD.

CAUTION: Be sure the wires in the following steps do not touch any of the eyelets or any other switch lugs.

Make the following connections to the rear of wafer #1 on switch FJ as follows:

( ) Connect a 1/2" bare wire from lug 1 of the switch (S-1) to lug 1 of crystal socket Y3 (S-1).

( ) Connect a 3/4" bare wire from lug 2 of the switch (S-1) to lug 1 of crystal socket Y4 (S-1).

( ) Connect a 1-1/4" bare wire from lug 3 of the switch (S-1) to lug 1 of crystal socket Y5 (S-1).

( ) Connect a 1-1/2" bare wire from lug 4 of the switch (S-1) to lug 2 of crystal socket Y6 (S-1).

( ) Connect a 1-3/4" bare wire from lug 5 of the switch (S-1) to lug 2 of crystal socket Y7 (S-1).

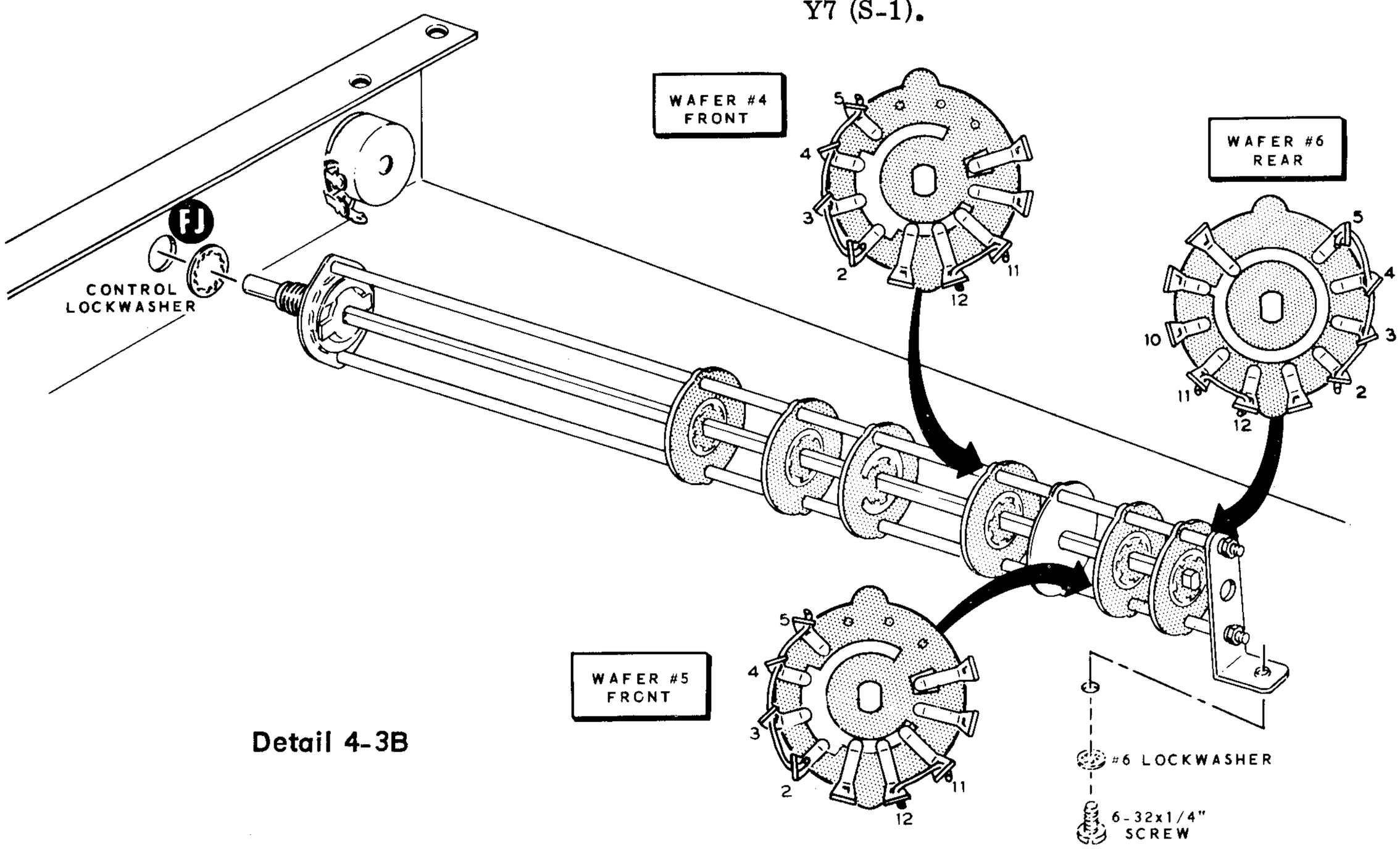

Detail 4-3B

( ) Connect a 2" bare wire from lug 6 of the switch to lug 2 of crystal socket Y8 (S-1).

( ) Connect a 2" bare wire from lug 7 of the switch (S-1) to lug 2 of crystal socket Y9 (S-1).

( ) Connect a 1/2" bare wire from lug 12 of the switch (S-1) to lug 1 of crystal socket Y2 (S-1).

( ) Connect a 3/4" bare wire from lug 11 of the switch (S-1) to lug 1 of crystal socket Y1 (S-1).

( ) Connect a 3300 Ω (orange-orange-red) resistor from lug 10 of the switch (NS) to the solder lug at crystal socket Y1 (NS).

( ) Connect a 2-1/2" bare wire from lug 10 of the switch (S-2) to hole G in the RF circuit board (S-1).

Connect the wires extending from the chassis to the rear of wafer #3 on switch FJ as follows:

( ) Orange from slot 9 to lug 1 (S-1).

( ) Yellow from slot 16 to lug 2 (S-1).

( ) Blue from slot 14 to lug 3 (S-1).

( ) Brown from slot 7 to lug 4 (S-1).

( ) Green from slot 2 to lug 5 (S-1).

( ) White from slot 3 to lug 12 (S-1).

( ) Black from slot 4 to lug 11 (S-1).

( ) Violet from slot 11 to lug 10 (S-1).

( ) White from slot 17 to lug 9 (S-1).

( ) Refer to Detail 4-3C, and prepare the following lengths of coaxial cable:

3"	3-1/4"
3"	2-1/2"

( ) At the end of a 3" coaxial cable with no shield, connect the inner lead to lug 2 on the rear of wafer #4 on switch FJ (S-1).

( ) At the other end of this cable, connect the inner lead to lug 1 of capacitor TG (S-1), and the shield to solder lug B (S-1).

( ) At the end of a 3" coaxial cable with no shield, connect the inner lead to lug 10 on the rear of wafer #4 on switch FJ (S-1).

( ) At the other end of this cable, connect the inner lead to hole V (S-1) and the shield to hole GND (S-1) of the RF circuit board.

( ) At the end of a 3-1/4" coaxial cable with no shield, connect the inner lead to lug 2 on the rear of wafer #5 on switch FJ (S-1).

( ) At the other end of this cable, connect the inner lead to lug 3 of capacitor TG (S-1), and the shield to solder lug C (NS).

( ) At the end of a 2-1/2" coaxial cable with no shield, connect the iner lead to lug 10 on the rear of wafer #5 on switch FJ (S-1).

( ) At the other end of this cable, connect the inner lead to hole N (S-1) and the shield to hole GND (S-1) of the RF circuit board.

Connect the wires extending from the chassis to the rear of wafer #6 on switch FJ as follows:

( ) Green from slot 27 to lug 1 (S-1).

( ) Brown from slot 30 to lug 2 (S-2).

( ) Orange from slot 33 to lug 11 (S-2).

( ) Black from slot 29 to lug 10 (NS).

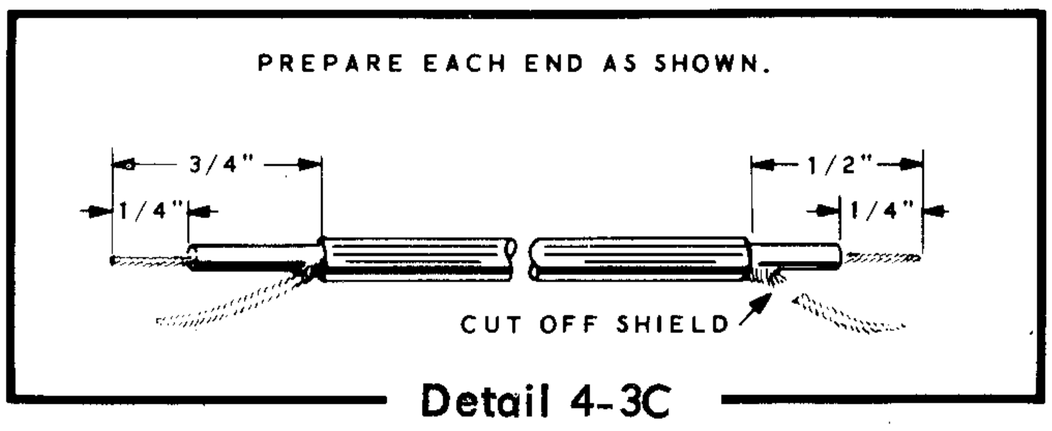

Detail 4-3C

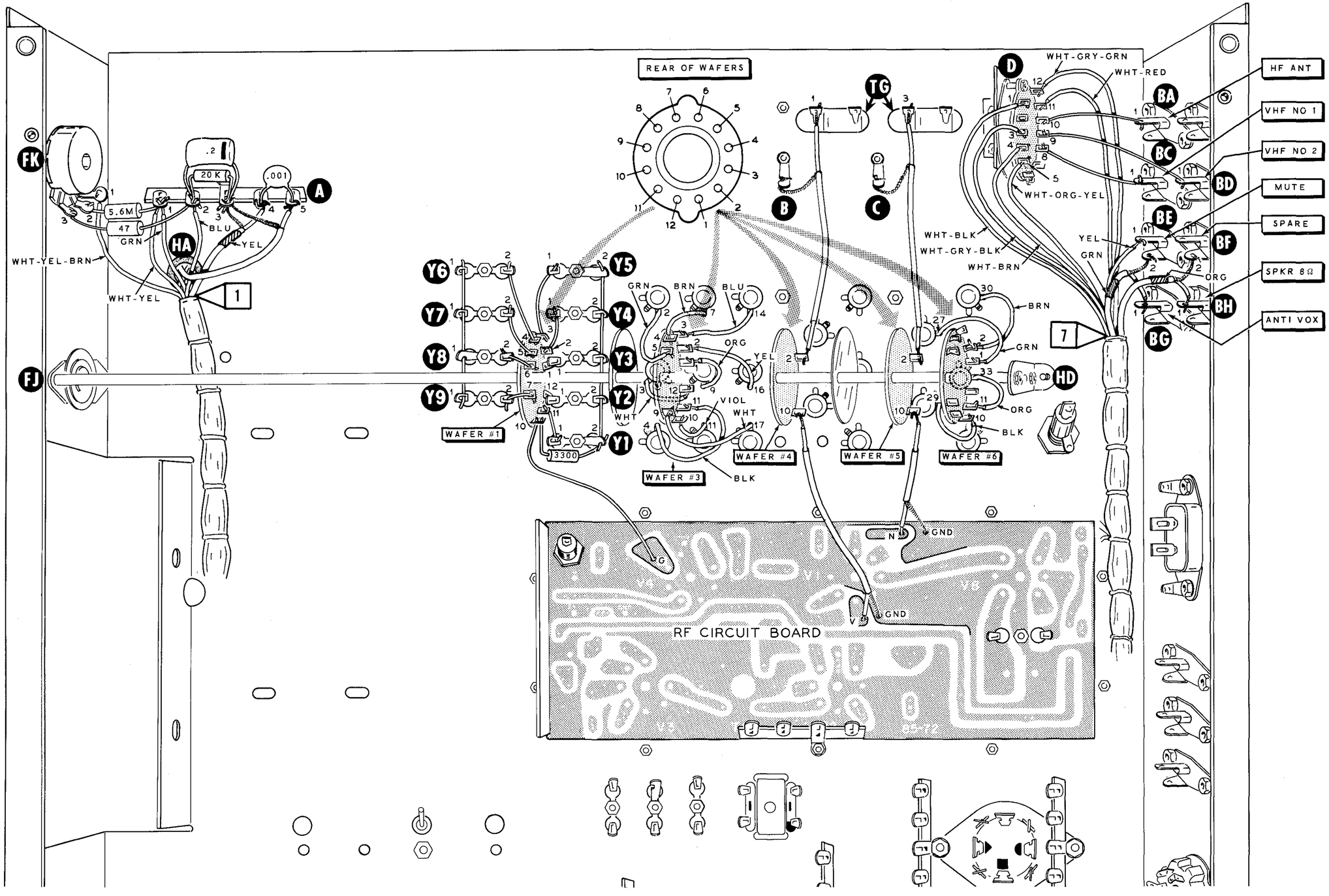

PICTORIAL 4-3

Refer to Pictorial 4-4 for the following steps.

Connect the wires extending from the chassis to the rear of wafer #2 on switch FJ as follows:

( ) Orange from slot 8 to lug 1 (S-1).

( ) Yellow from slot 15 to lug 2 (S-1).

( ) Blue from slot 13 to lug 3 (S-1).

( ) Brown from slot 7 to lug 4 (S-1).

( ) Green from slot 1 to lug 5 (S-1).

( ) Black from slot 5 to lug 11 (S-1).

( ) Violet from slot 12 to lug 10 (S-1).

( ) White from slot 18 to lug 9 (S-1).

( ) Refer to Detail 4-4A, and prepare the ends of an 8" coaxial cable.

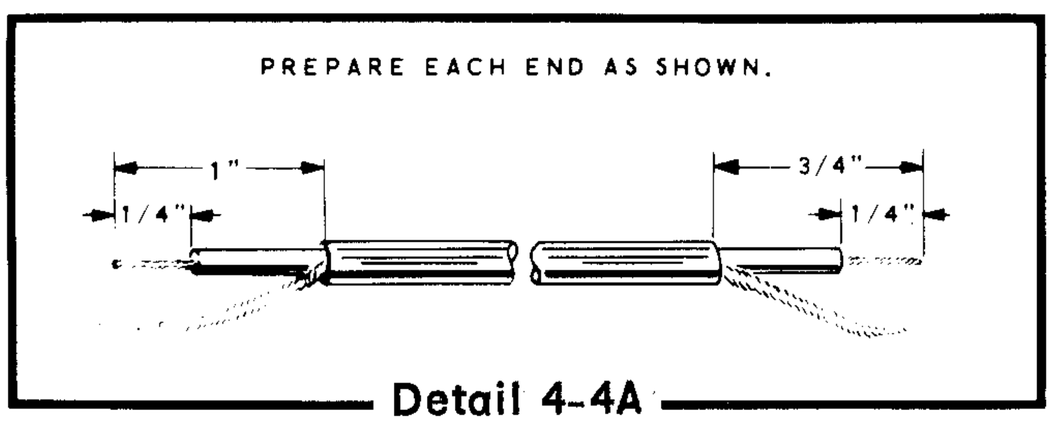

Detail 4-4A

( ) At the end of this cable with the longer shield, connect the inner lead to lug 8 on the rear of wafer #2 on switch FJ (S-1), and connect the shield to the solder lug at crystal socket Y1 (S-4). Be sure the solder lug is soldered to lug 2 of the crystal socket.

( ) At the other end of this cable, connect the inner lead to lug 1 (S-1) and the shield to lug 2 (S-1) of phono socket BM.

( ) Place a 1/2" length of sleeving on the lead extending from the end of the 8.5 MHz trap coil (#40-546) that has a disc capacitor. Connect this lead of the coil to lug 10 on the rear of wafer #6 on switch FJ (S-2). Connect the other lead of the coil to lug 2 of phono socket BH (S-1).

( ) Connect the violet wire that extends from slot 35 in the chassis to lug 9 on the rear of wafer #6 on switch FJ (S-1).

( ) Place a 2-1/2" length of sleeving on a 3" bare wire. Connect this wire from lug 7 of switch D (S-1) to lug 8 on the rear of wafer #6 on switch FJ (NS).

( ) Connect a 3" green wire from lug 8 on wafer #6 of switch FJ (S-2) to hole Z in the RF circuit board (S-1).

( ) Place a 3/4" length of sleeving on a 1-1/4" bare wire. Connect this wire from lug 2 of fuseholder E (S-1) to lug 1 of AC socket BK (NS).

( ) Connect a .005 μfd 1.4 KV disc capacitor from solder lug BJ (S-2) to lug 1 of AC socket BK (S-2). Be careful not to melt the wires of the cable harness.

( ) Connect another .005 μfd 1.4 KV disc capacitor from lug 2 of AC socket BK (S-2) to solder lug BL (S-1).

Refer to Pictorial 4-5 (fold-out from Page 45) for the following steps.

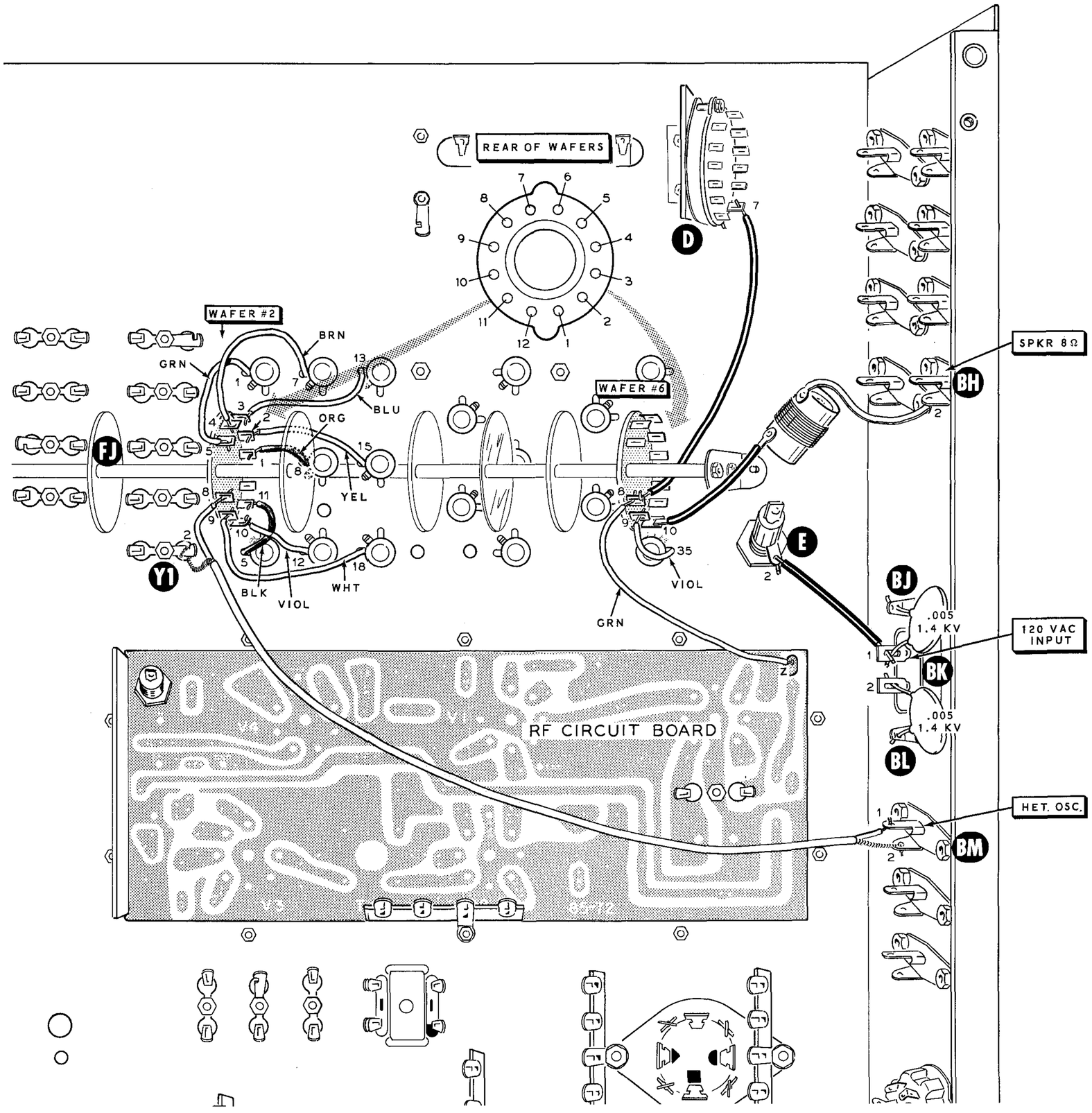

PICTORIAL 4-4

Connect the wires extending from the chassis to the front of wafer #4 on switch FJ as follows:

( ) Green from slot 20 to lug 1 (S-1).

( ) Brown from slot 23 to lug 2 (S-2).

( ) Orange from slot 24 to lug 12 (S-2).

( ) Black from slot 21 to lug 10 (S-1).

( ) Violet from slot 25 to lug 9 (NS).

Connect the wires extending from the chassis to the front of wafer #5 on switch FJ as follows:

( ) Green from slot 26 to lug 1 (S-1).

( ) Brown from slot 31 to lug 2 (S-2).

( ) Orange from slot 32 to lug 12 (S-2).

( ) Choke lead from slot 28 to lug 10 (S-1).

( ) Choke lead from slot 34 to lug 9 (NS).

( ) Refer to Detail 4-5A, and prepare the ends of the following lengths of coaxial cable:

2-1/2"	4-1/2"
4-3/4"	4-1/4"

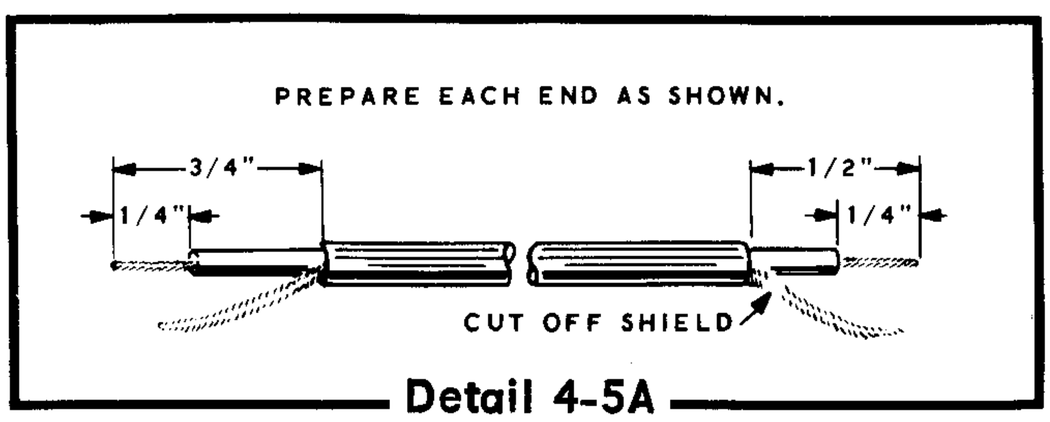

Detail 4-5A

( ) At the end of a 2-1/2" coaxial cable with no shield, connect the inner lead to lug 9 on the front of wafer #3 on switch FJ (NS).

( ) At the other end of this cable, connect the inner lead to hole H (S-1) and the shield to hole GND (S-1) in the RF circuit board.

( ) At the end of a 4-3/4" coaxial cable with no shield, connect the inner lead to lug 8 on the front of wafer #3 on switch FJ (NS).

( ) At the other end of this cable, connect the inner lead to hole U (S-1) and the shield to hole GND (S-1) in the RF circuit board.

( ) At the end of a 4-1/2" coaxial cable with no shield, connect the inner lead to lug 9 on the front of wafer #4 on switch FJ (S-2).

( ) Pass the other end of this cable between the switch shaft and spacer. Connect the inner lead to lug 2 of capacitor TG (S-1), and the shield to solder lug C (NS).

( ) At the end of a 4-1/4" coaxial cable with no shield, connect the inner lead to lug 9 on the front of wafer #5 on switch FJ (S-2).

( ) Pass the other end of this cable between the switch shaft and spacer. Connect the inner lead to lug 4 of capacitor TG (S-1), and the shield to solder lug C (S-3).

( ) Connect a 7.5 pf mica capacitor between lugs 8 (S-2) and 9 (S-2) on the front of wafer #3 on switch FJ.

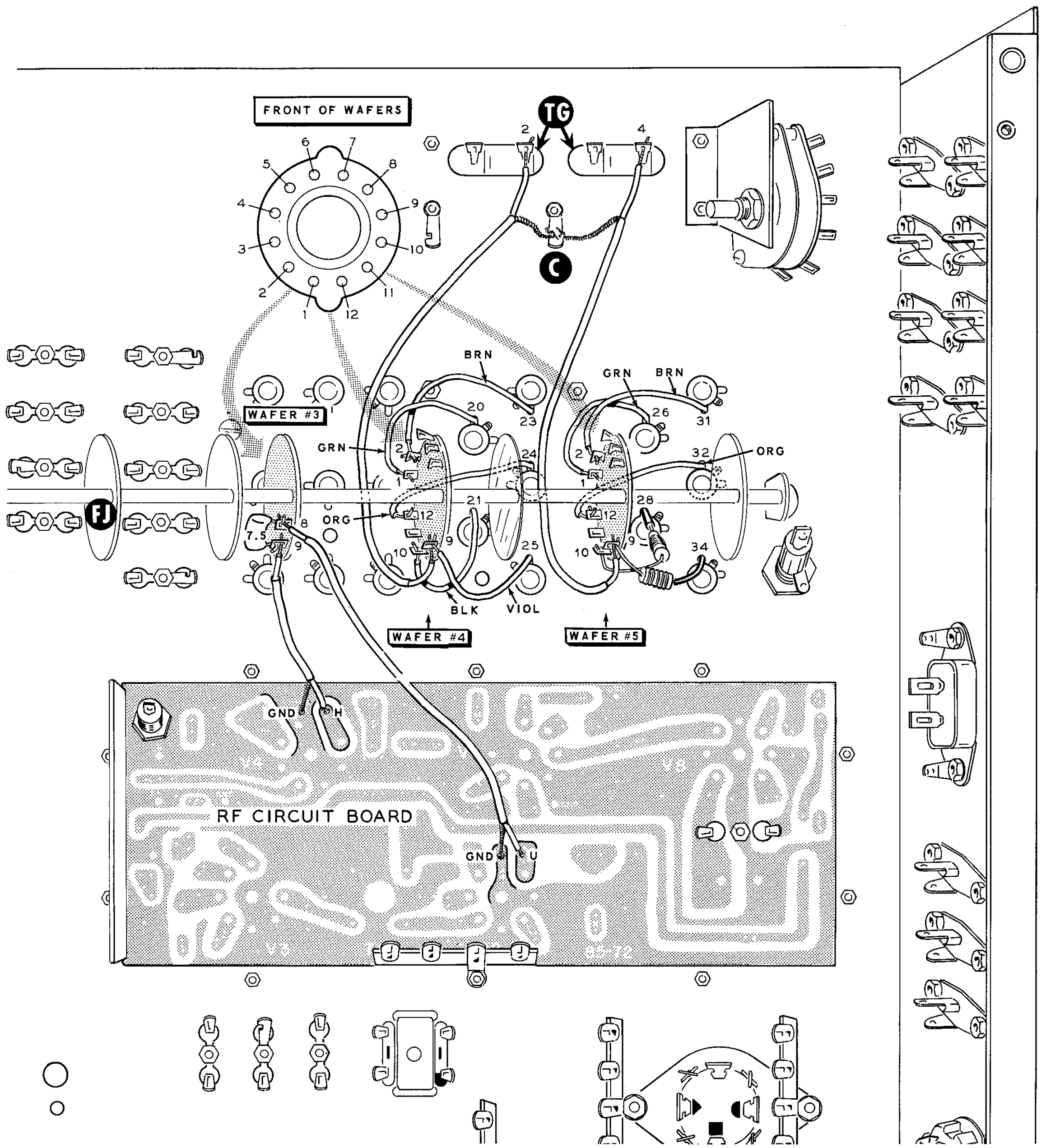

PICTORIAL 4-5

Refer to Pictorial 4-6 for the following steps.

NOTE: When installing electrolytic capacitors, be sure to position the positive (+) end as shown. Also be careful not to bend the leads too tightly around the end of these capacitors, as the leads may break.

( ) Connect a 10 μfd 150 V electrolytic capacitor between lugs 1 (NS) and 3 (S-2) of terminal strip F. Note the position of the positive (+) end.

( ) Connect a 1000 Ω (brown-black-red) resistor from lug 4 of coil CY (NS) to lug 1 of terminal strip J (NS).

( ) Connect a 10 μfd 150 V electrolytic capacitor from lug 1 of terminal strip K (NS) to lug 2 of terminal strip J (NS). Note the position of the positive (+) end.

( ) Connect another 10 μfd 150 V electrolytic capacitor from lug 2 of terminal strip K (NS) to lug 3 of terminal strip J (NS). Note the position of the positive (+) end.

( ) Connect a 12 KΩ (brown-red-orange) resistor between lugs 1 (NS) and 2 (NS) of terminal strip K.

( ) Connect a 20 KΩ (red-black-orange) resistor between lugs 2 (NS) and 5 (S-2) of terminal strip K.

( ) Connect a 10 KΩ (brown-black-orange) 2 watt resistor from lug 6 of capacitor L (S-1) to lug 1 of terminal strip M (NS).

( ) Connect a 3300 Ω (orange-orange-red) 1 watt resistor between lugs 1 (NS) and 2 (NS) of terminal strip M.

( ) Place a 7/8" length of sleeving on one lead of a 100 Ω (brown-black-brown) 2 watt resistor. Connect this lead to lug 3 (NS) and the other lead to lug 2 (NS) of capacitor L.

( ) Place another 7/8" length of sleeving on one lead of a 330 Ω (orange-orange-brown) 2 watt resistor. Connect this lead to lug 3 (S-3) and the other lead to lug 4 (NS) of capacitor L.

( ) Connect a 10 μfd 15 volt electrolytic capacitor between lugs 3 (NS) and 5 (NS) of terminal strip J. Note the position of the positive (+) end.

( ) Connect a 47 KΩ (yellow-violet-orange) resistor from lug 3 of tube socket V9 (NS) to lug 2 of terminal strip J (NS).

( ) Connect a 68 KΩ (blue-gray-orange) resistor from lug 4 of tube socket V9 (NS) to lug 4 of terminal strip J (NS).

( ) Connect a 15 μh choke (#45-51) from lug 5 of tube socket V9 (NS) to solder lug H (NS).

( ) Connect a 180 pf mica capacitor from lug 5 of tube socket V9 (NS) to solder lug H (NS).

( ) Connect a 2700 Ω (red-violet-red) resistor from lug 7 of tube socket V9 (NS) to solder lug H (NS).

( ) Connect a 50 pf mica capacitor from lug 7 of tube socket V9 (NS) to solder lug H (NS).

( ) Connect a 5 pf disc capacitor between lugs 7 (NS) and 11 (NS) of tube socket V9.

( ) Connect a .01 μfd disc capacitor from lug 1 of terminal strip G (NS) to solder lug X (NS).

( ) Connect a 10 KΩ (brown-black-orange) resistor from lug 11 of tube socket V9 (S-2) to solder lug X (NS).

( ) Connect a 470 pf disc capacitor between lugs 3 (NS) and 4 (NS) of terminal strip G. Push the body of the capacitor down against the chassis.

( ) Connect a 150 Ω (brown-green-brown) resistor from lug 9 of tube socket V9 (NS) to solder lug X (NS).

( ) Connect a 47 KΩ (yellow-violet-orange) resistor from lug 4 of terminal strip G (NS) to lug 8 of tube socket V9 (NS).

( ) Connect a 100 KΩ (brown-black-yellow) resistor from lug 5 of terminal strip G (S-3) to lug 8 of tube socket V9 (NS).

( ) Connect a .01 μfd disc capacitor between lugs 4 (S-3) and 5 (S-3) of terminal strip S.

( ) Place a 3/8" length of sleeving on one lead of a 20 KΩ (red-black-orange) resistor. Connect this lead to hole T in the noise limiter circuit board (S-1) and the other lead to lug 1 of terminal strip Z (S-2).

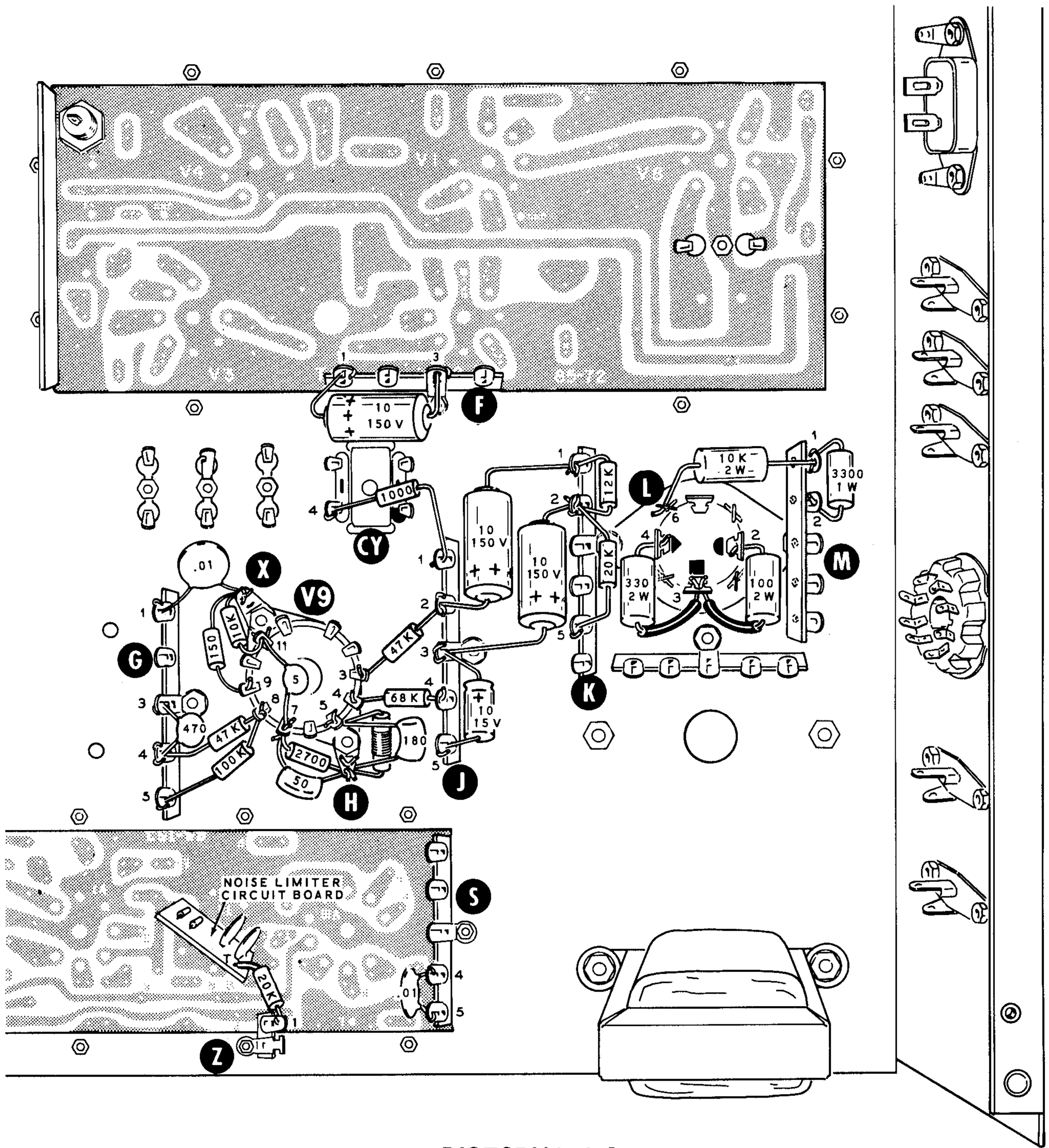

PICTORIAL 4-6

Refer to Pictorial 4-7 (fold-out from Page 51) for the following steps.

( ) Connect a 3300 Ω (orange-orange-red) resistor between lugs 1 (S-3) and 2(S-2) of terminal strip F.

( ) Connect a .01 μfd disc capacitor from lug 1 of crystal socket Y12 (S-2) to lug 4 of coil CY (S-2).

( ) Pass one lead of a .01 μfd disc capacitor through lug 1 of coil CY (S-2) to lug 2 of tube socket V9 (S-1). Connect the other lead of this capacitor to lug 3 of coil CY (NS).

( ) Connect a 470 KΩ (yellow-violet-yellow) resistor from lug 4 of terminal strip F (S-2) to lug 2 of terminal strip K (NS).

( ) Connect a 470 Ω (yellow-violet-brown) resistor between lugs 1 (S-3) and 4 (S-5) of capacitor L.

NOTE: When installing silicon diodes, be sure to position the marked end as shown. See Detail 4-7A for the end markings of silicon diodes.

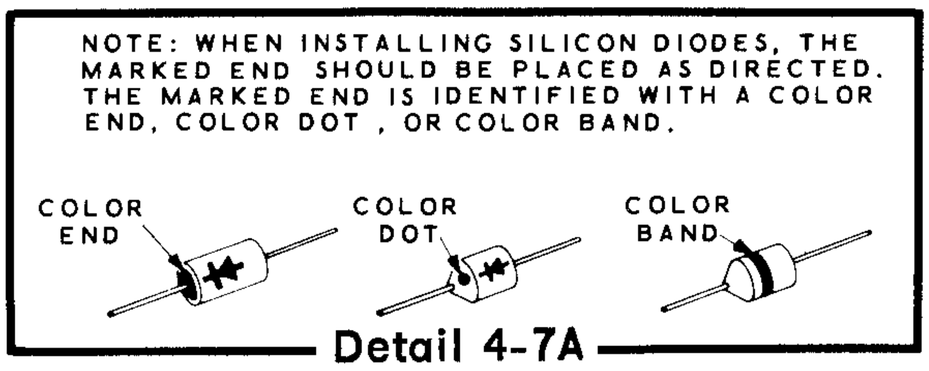

Detail 4-7A

( ) Connect a silicon diode from lug 1 of terminal strip K (S-3) to lug 1 of terminal strip M (S-3). Note the position of the marked end.

( ) Connect a silicon diode from lug 2 of terminal strip M (S-3) to lug 2 of capacitor L (NS). Note the position of the marked end.

( ) Connect a silicon diode from lug 2 of capacitor L (S-4) to lug 4 of terminal strip M (S-2). Note the position of the marked end.

( ) Connect a 470 KΩ (yellow-violet-yellow) resistor between lugs 2 (NS) and 4 (NS) of terminal strip K.

( ) Connect a 15 KΩ (brown-green-orange) resistor between lugs 4 (S-3) and 6 (S-5) of terminal strip K.

( ) Pass one lead of a 15 KΩ (brown-green-orange) resistor through lug 3 (NS), to lug 2 (NS) of terminal strip J. Connect the other lead of this resistor to lug 5 of terminal strip J (NS).

( ) Connect a .01 μfd disc capacitor between lugs 3 (S-5) and 4 (NS) of terminal strip J.

( ) Place a 1" length of sleeving on each lead of a 470 KΩ (yellow-violet-yellow) resistor. Connect this resistor from lug 2 of terminal strip K (S-6) to lug 5 of terminal strip J (NS).

( ) Connect a .01 μfd disc capacitor between lugs 1 (S-3) and 2 (S-4) of terminal strip J.

( ) Connect a .01 μfd disc capacitor from lug 4 of tube socket V9 (S-2) to lug 4 of terminal strip J (S-5).

( ) Connect a 1000 Ω (brown-black-red) resistor from lug 6 of tube socket V9 (NS) to lug 5 of terminal strip J (S-4).

( ) Connect a 100 pf mica capacitor between lugs 5 (S-3) and 7 (NS) of tube socket V9.

( ) Connect a 30 pf mica capacitor between lugs 3 (NS) and 7 (S-5) of tube socket V9.

( ) Connect a 15 KΩ (brown-green-orange) resistor between lugs 1 (S-3) and 2 (NS) of terminal strip G.

( ) Connect a 33 KΩ (orange-orange-orange) resistor from lug 2 of terminal strip G (S-4) to lug 10 of tube socket V9 (NS).

( ) Connect a .01 μfd disc capacitor from lug 10 of tube socket V9 (S-2) to solder lug X (S-4).

( ) Connect another .01 μfd disc capacitor from lug 3 of terminal strip G (NS) to lug 9 of tube socket V9 (S-2).

( ) Connect a 470 pf disc capacitor from lug 3 of terminal strip G (NS) to lug 8 of tube socket V9 (S-3).

( ) Connect a 15 KΩ (brown-green-orange) resistor between lugs 1 (S-2) and 3 (S-2) of terminal strip R.

( ) Refer to Detail 4-7B, and mount the 5-position 4-wafer rotary switch (#63-423) at FH. Use a control lockwasher on the bushing of the switch with a 6-32 x 1/4" screw and a #6 lockwasher at HE. Bend lug 12 of wafer #1 (if it is not already bent) as shown in the inset drawing. The control nut will be installed later.

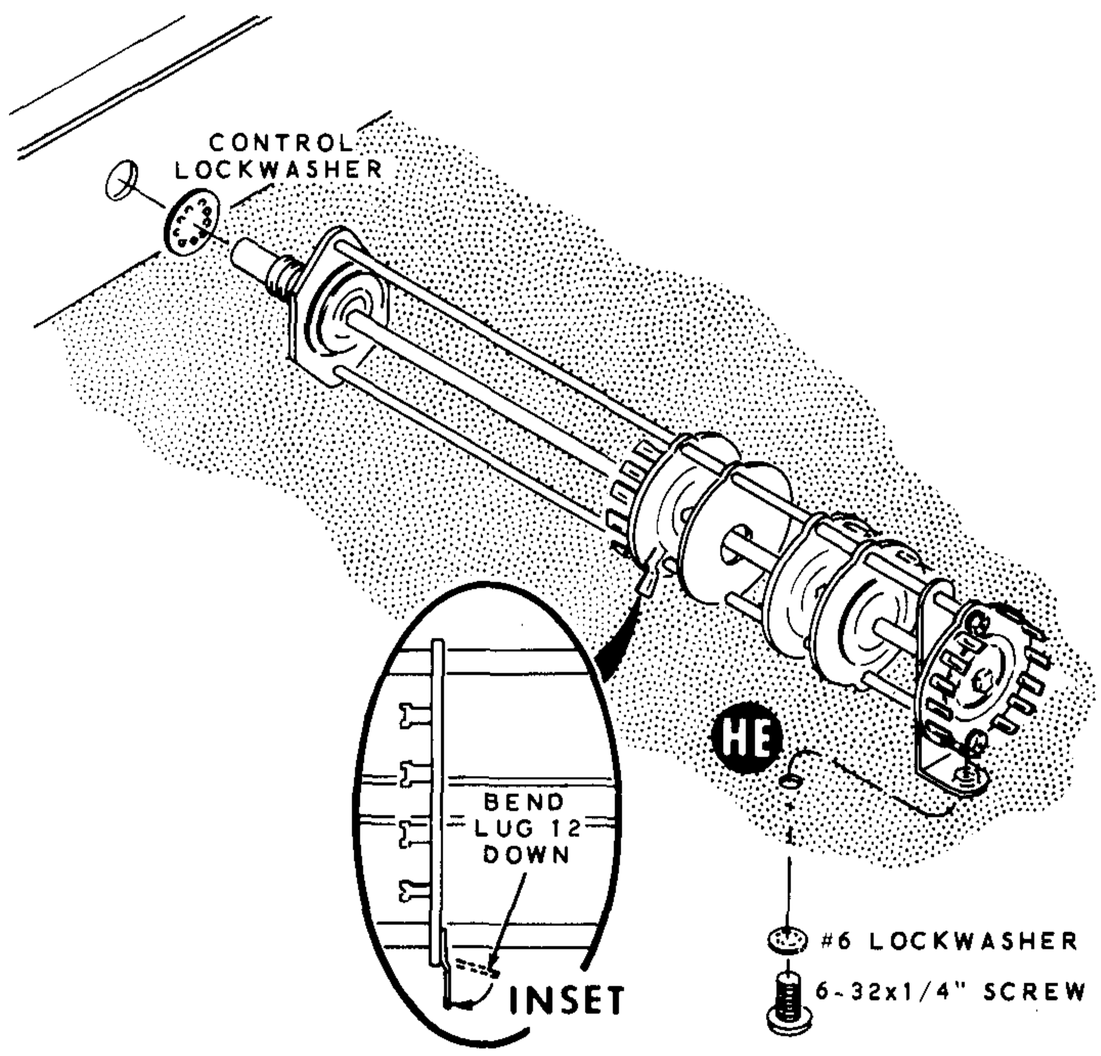

Detail 4-7B

( ) Pass one end of a 3-1/2" bare wire through lug 9 (S-2) and lug 8 (S-2) to lug 7 (S-1) on wafer #1 of switch FH. Connect the other end of this wire to lug 2 of crystal filter FL-1 (S-1).

( ) Pass one end of a 3" bare wire through lug 4 (S-2), and lug 3 (S-2) to lug 2 (S-1) on wafer #2 of switch FH. Connect the other end of this wire to lug 1 of crystal filter FL-1 (S-1).

( ) Connect the white coaxial cable from BO#2 of the cable harness as follows: inner lead to lug 12 on wafer #4 of switch FH (S-1). and the shield to lug 3 of terminal strip G (S-4).

( ) Place a 2-1/2" length of sleeving on a 3" bare wire. Connect this wire from lug 11 on wafer #4 of switch FH (S-1) to hole T in the IF circuit board (S-1).

( ) Pass one lead of a .001 μfd disc capacitor through lug 10 (S-2), lug 9 (S-2) and lug 8 (S-2) to lug 7 (S-1) on wafer #4 of switch FH. Connect the free lead of this capacitor to lug 4 of terminal strip G (S-3).

( ) Connect a 3/4" bare wire from lug 1 on wafer #4 of switch FH (S-1) to lug 2 of crystal socket Y10 (S-1).

( ) Connect a 1" bare wire from lug 2 on wafer #4 of switch FH (S-1) to lug 2 of crystal socket Y11 (S-1).

( ) Pass one end of a 2" bare wire through lug 3 (S-2) to lug 4 (S-1) on wafer #4 of switch FH. Connect the other end of this wire to lug 2 of crystal socket Y12 (S-1).

( ) Connect a 2-3/4" green wire from lug 6 on wafer #4 of switch FH (S-1) to lug 3 of tube socket V9 (S-3).

( ) Connect the free end of the orange wire that comes from BO#6 of the wire assembly to lug 12 on wafer #3 of switch FH (S-1).

( ) Connect the free end of the orange wire that comes from lug 2 of terminal strip G to lug 11 on wafer #3 of switch FH (S-1).

( ) Remove a total of 3/4" of insulation from the free end of the red wire coming from lug 1 of terminal strip G.

( ) Pass this end of the wire through lug 2 (S-2) to lug 1 (S-1) on wafer #3 of switch FH.

( ) Remove a total of 1-1/4" of insulation from the free end of the yellow wire coming from lug 4 of terminal strip F.

( ) Pass this end of the wire through lug 3 (S-2) and lug 4 (S-2) to lug 5 (S-1) of wafer #3 on switch FH.

( ) Place a 2" length of sleeving on a 2-1/2" bare wire. Connect this wire from lug 1 on wafer #2 of switch FH (S-1) to hole Y in the RF circuit board (S-1).

( ) Connect one end of a 5-1/2" yellow wire to lug 6 on wafer #3 of switch FH (S-1). Pass the other end of this wire through hole E in the RF circuit board for connection later.

( ) Place a 1-1/2" length of sleeving over a 2" bare wire. Connect this wire from lug 12 on wafer #1 of switch FH (S-1) to hole C in the IF circuit board (S-1).

If you have the 400 Hz CW crystal and/or the 3.75 kHz AM crystal filter installed in the receiver, perform the group of steps pertaining to the filter used. If neither of these filters are used, the following two groups of steps can be disregarded.

400 Hz CRYSTAL FILTER

( ) Place a 1-1/4" length of sleeving over a 1-3/4" bare wire. Connect this wire from lug 10 on wafer #1 of switch FH (S-1) to lug 2 of crystal filter FL-2 (S-1).

( ) Place a 3" length of sleeving over a 3-1/2" bare wire. Connect this wire from lug 5 on wafer #2 of switch FH (S-1) to lug 1 of crystal filter FL-2 (S-1).

3.75 kHz CRYSTAL FILTER

( ) Place a 1-1/4" length of sleeving on a 1-3/4" bare wire. Connect this wire from lug 11 on wafer #1 of switch FH (S-1) to lug 2 of crystal filter FL-3 (S-1).

( ) Place a 1-3/4" length of sleeving on a 2-1/4" bare wire. Connect this wire from lug 6 on wafer #2 of switch FH (S-1) to lug 1 of crystal filter FL-3 (S-1).

This completes the wiring of the crystal filters.

( ) Refer to Detail 4-7C, and prepare the ends of a 7-1/2" length and a 6" length of coaxial cable.

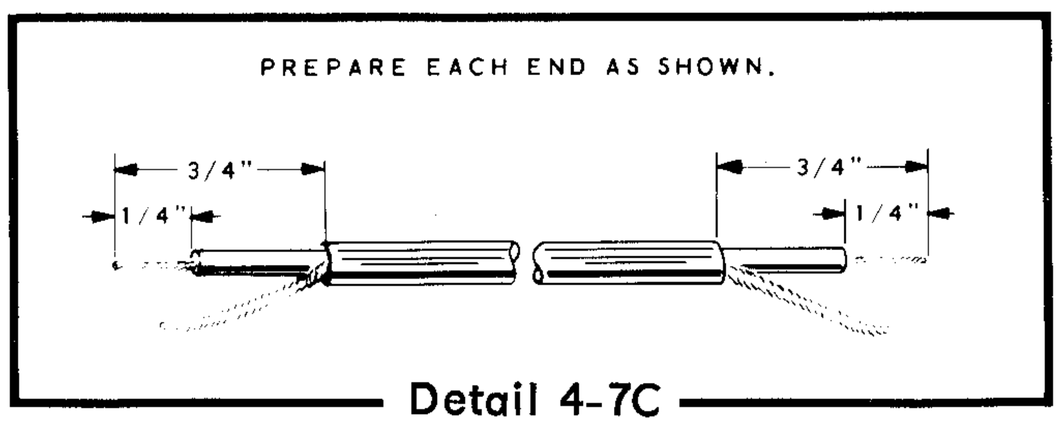

Detail 4-7C

( ) At one end of the 7-1/2" length of shielded cable, connect the inner lead to hole F (S-1) and the shield to hole GND (S-1) in the RF circuit board.

( ) At the other end of this cable, connect the inner lead to lug 1 (S-1) and the shield to lug 2 (S-1) of phono socket BN.

( ) At one end of a 6" length of coaxial cable, connect the inner lead to lug 3 (S-2) and the shield to lug 2 (S-2) of coil CY.

( ) At the other end of this cable, connect the inner lead to lug 1 (S-1) and the shield to lug 2 (S-2) of phono socket BP.

( ) Using the electrical tape, wrap 3/4" lengths of tape around these coaxial cables as shown.

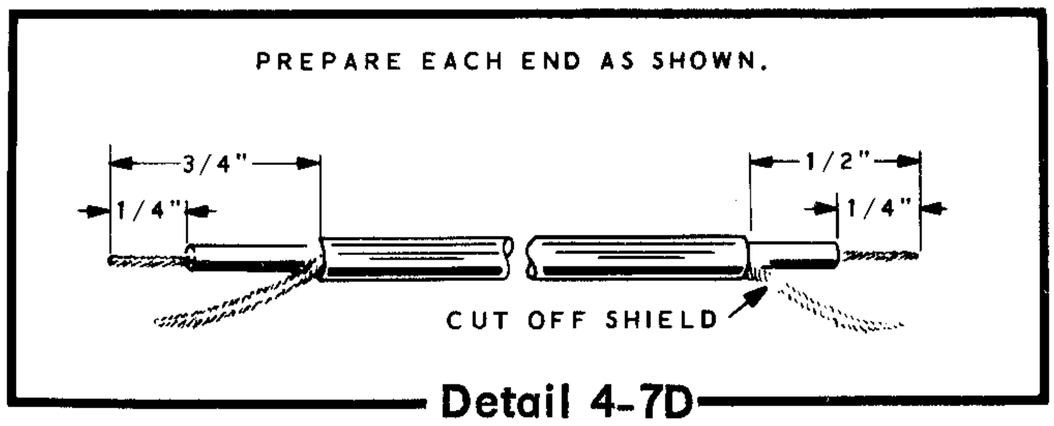

Detail 4-7D

( ) Refer to Detail 4-7D and prepare the ends of a 3" length of coaxial cable.

( ) At the end of this cable with no shield, connect the inner lead to hole E in the IF circuit board (S-1).

( ) At the other end of this cable, connect the inner lead to lug 6 of tube socket V9 (S-2), and the shield to solder lug H (S-5).

Refer to Detail 4-7E for the following steps.

( ) Mount a 6-32 spade bolt at T on the switch shield. Use a 6-32 x 1/4" screw, a large #6 solder lug, and a 6-32 nut.

( ) Mount a 6-32 spade bolt at U on the switch shield, using 6-32 x 1/4" hardware.

( ) Mount the switch shield on the chassis. Use #6 lockwashers and 6-32 nuts. Be sure not to pinch any wires between the switch shield and chassis.

( ) Connect a 1" bare wire from solder lug T (S-1) to lug 1 on wafer #1 of switch FH (S-1).

( ) Refer to Detail 4-7F, and install the two chassis rails. Use 6-32 x 3/8" flat head hardware.

( ) Position the wiring harness into the bend of the chassis rail. Be careful that the edges of the chassis rail do not cut any of the wires.

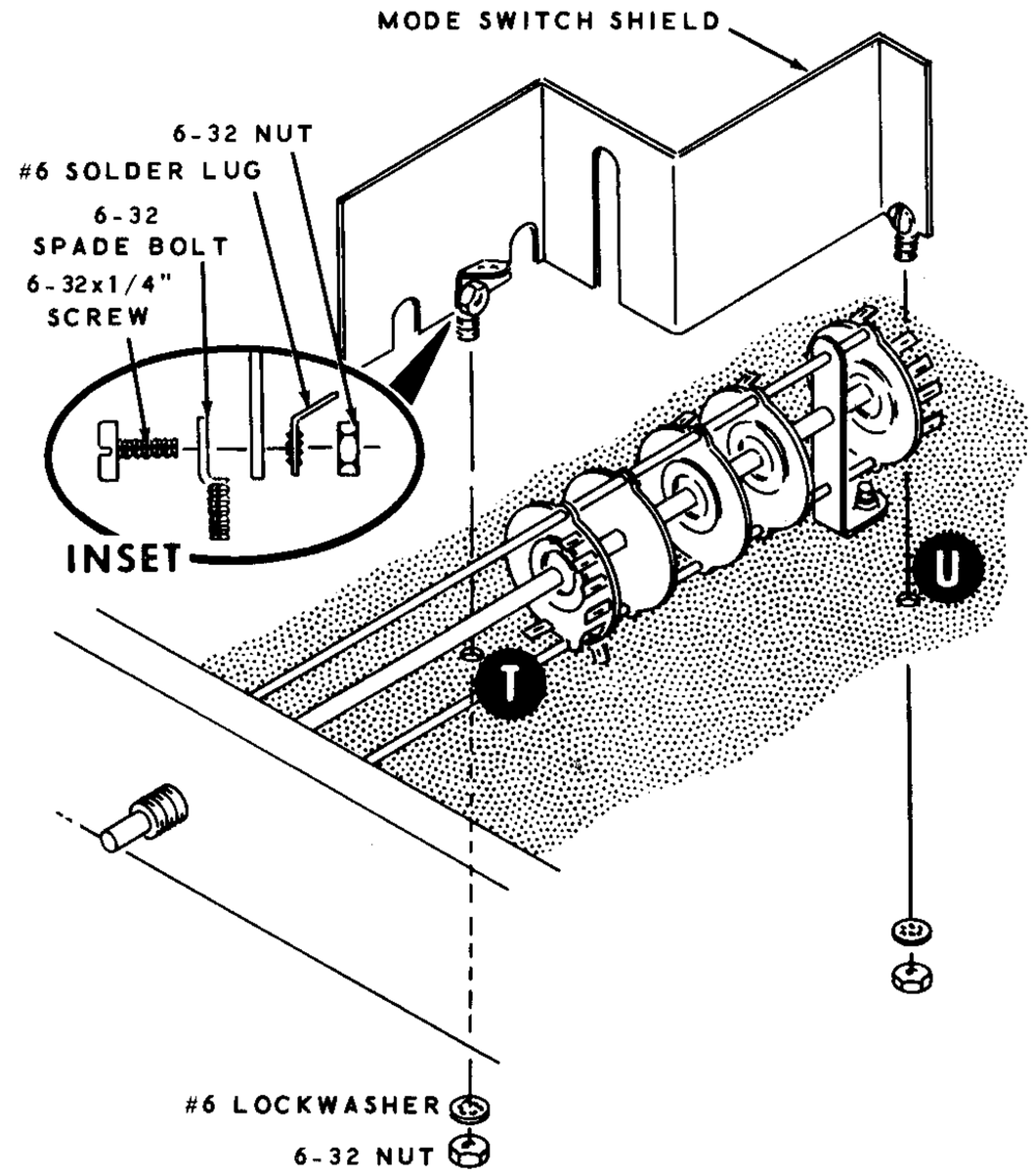

Detail 4-7E

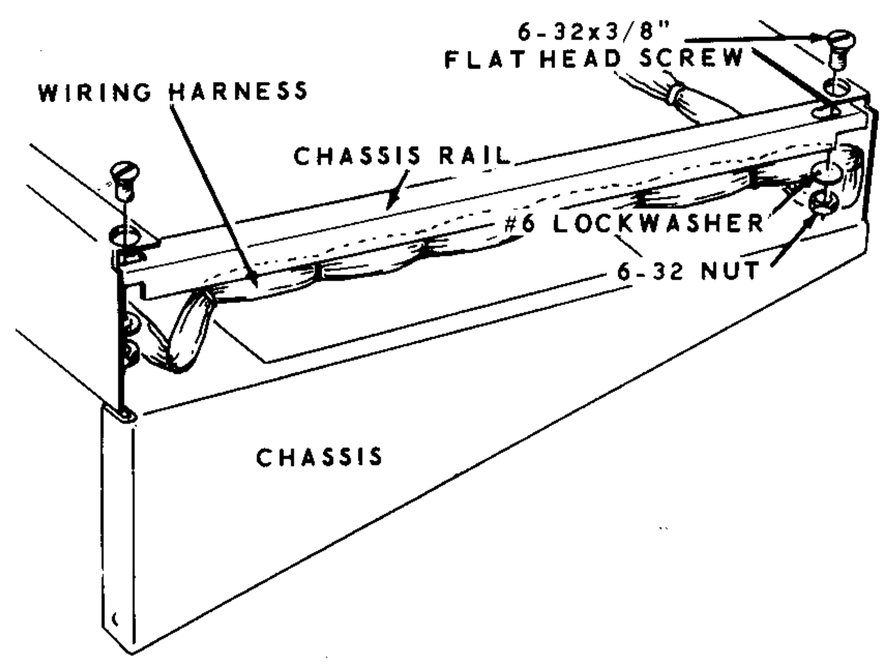

Detail 4-7F

This completes the wiring on the bottom of the chassis. Check to see that all connections, except lug 1 of terminal strip N, are soldered. Shake out any wire clippings and solder splashes.

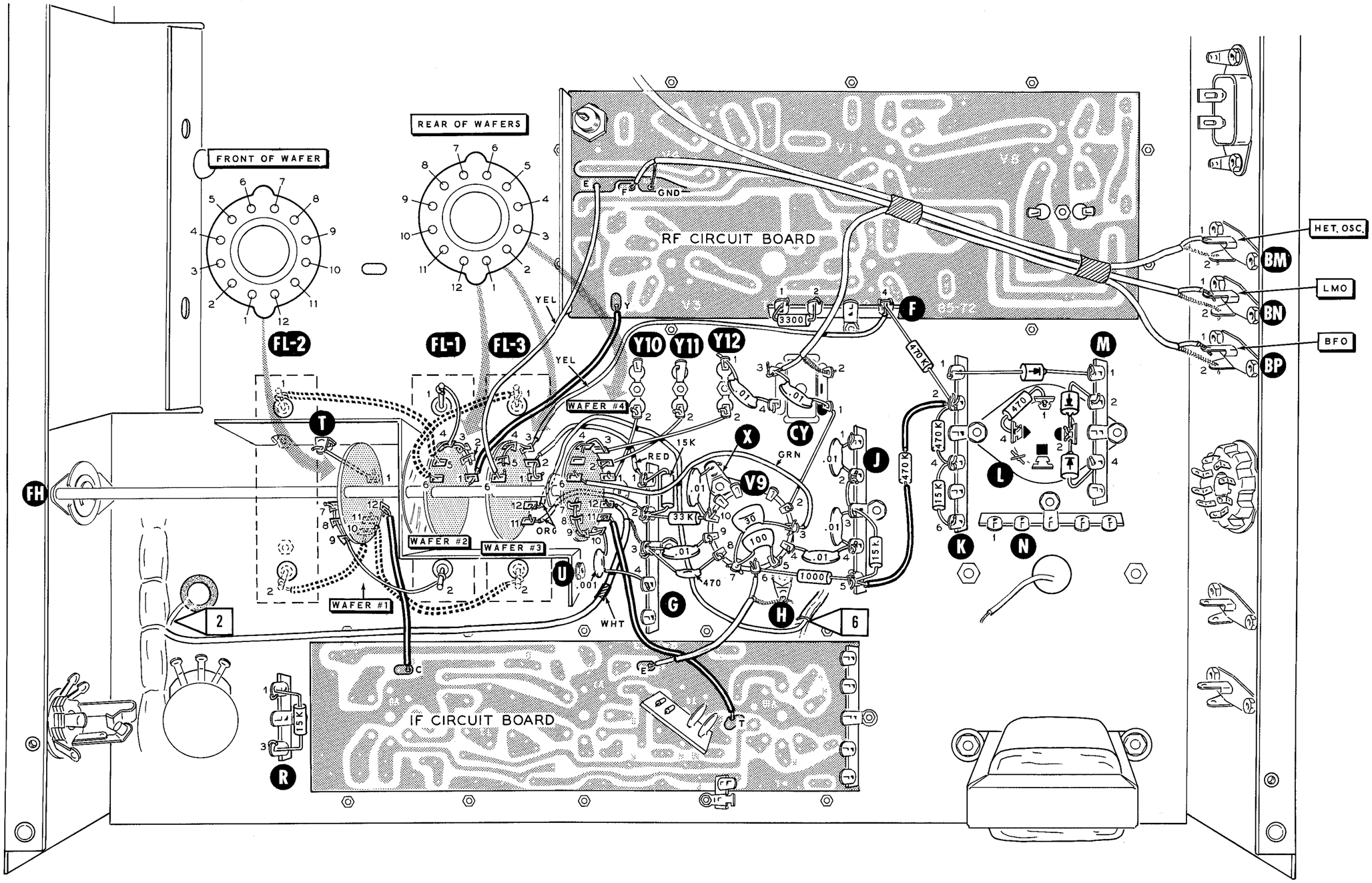

PICTORIAL 4-7

PARTS PICTORIAL

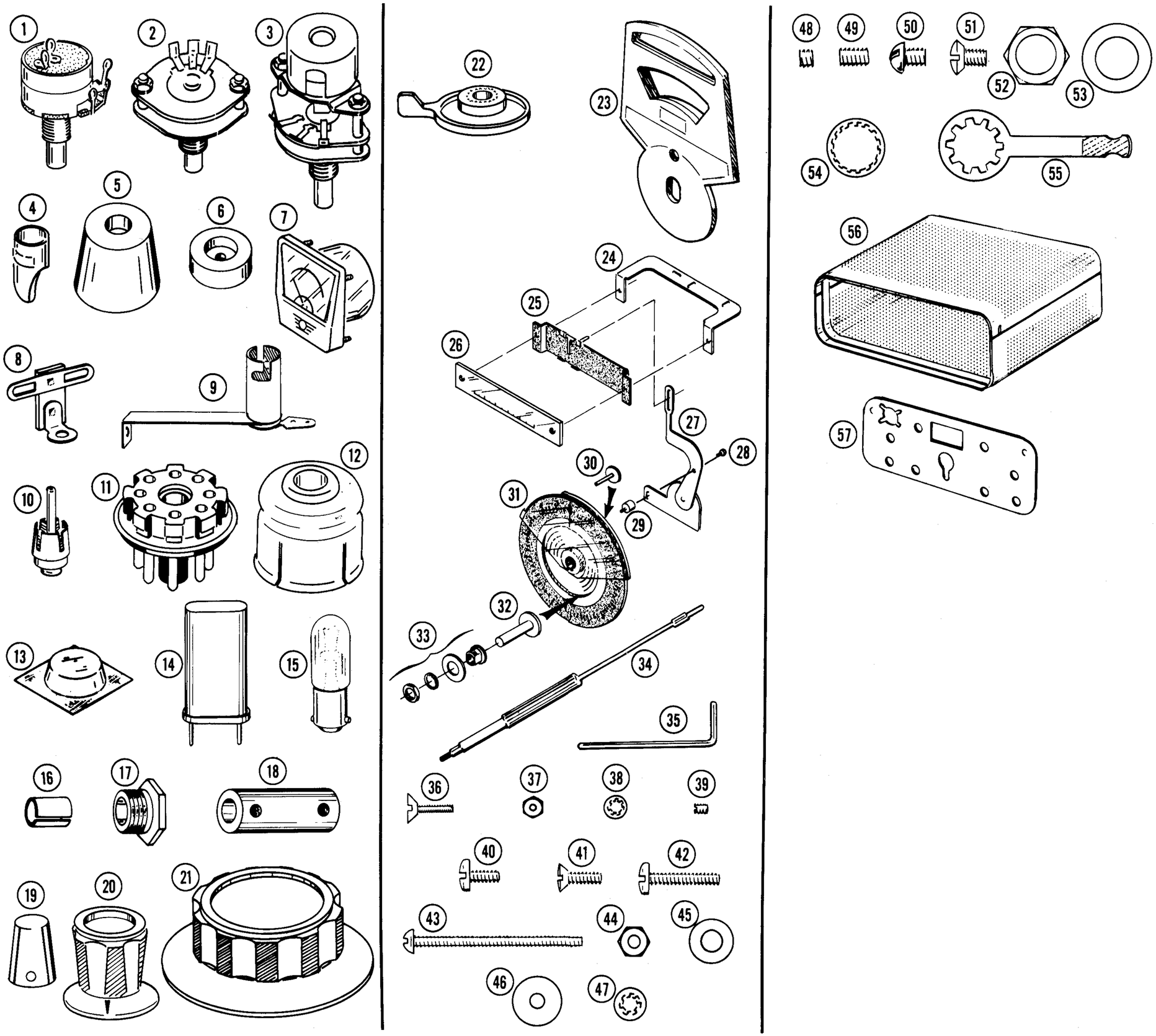

TOP CHASSIS WIRING

This section of the Manual contains a Parts List and Step-By-Step Assembly for the wiring of the top of the chassis and front panel.

Parts List #5

Check the remaining parts from pack #5 against the following Parts List. The numbers in parentheses are keyed to the numbers in the Parts Pictorial (fold-out from Page 52.)

PART No.	PARTS Per Kit	DESCRIPTION
GENERAL		
(1)19-66	1	500 KΩ control w/switch
27-34	1	.2 μfd Mylar capacitor
(2)63-335	1	3-position rotary switch
(3)63-421	1	4-position rotary with snap switch
89-3	1	Line cord
110-40	1	LMO (linear master oscillator)
(4)206-86	3	Pilot lamp shield
(5)255-59	2	Plastic foot spacer
(6)261-9	4	Rubber foot
391-45	1	SB-301 nameplate
391-34	1	Blue and white label
(7)407-99	1	Meter
(8)431-1	1	1-lug terminal strip
(9)434-90	3	Pilot lamp socket
(10)438-4	14	Phono plug
(11)438-6	1	Octal plug
(12)440-1	1	Octal plug cap
(13)352-13	1	Silicone grease

PART No.	PARTS Per Kit	DESCRIPTION
CRYSTALS		
(14)404-43	1	100 kHz
404-280	1	3392.110 kHz
404-205	1	3393.6 kHz
404-206	1	3396.4 kHz
404-207	1	12.395 MHz
404-208	1	15.895 MHz
404-209	1	22.895 MHz
404-279	1	23.895 MHz
404-210	1	29.895 MHz
404-211	1	36.895 MHz
404-212	1	37.395 MHz
404-213	1	37.895 MHz
404-214	1	38.395 MHz
TUBES-LAMPS-FUSE		
411-58	1	6AB4 tube
411-200	1	6AS11 tube
411-11	3	6AU6 tube
411-90	2	6BA6 tube
411-126	1	6BZ6 tube
411-171	1	6HF8 tube
(15)412-20	3	#47 pilot lamp
421-3	1	2 ampere slow-blow fuse

PART No.	PARTS Per Kit	DESCRIPTION
SHAFTS-BUSHINGS-COUPLINGS		
453-145	1	Small diameter shaft
453-123	1	Large diameter shaft
(16)455-11	2	Split shaft bushing
(17)455-13	1	Threaded bushing
(18)456-4	1	Insulated coupling
456-7	1	Metal coupling
KNOBS		
(19)462-175	1	7/16" diameter aluminum
(20)462-191	7	1-1/8" diameter
(21)462-193	1	2-1/2" diameter
(22)462-195	1	Lever
DIAL PARTS		
(23)446-40	1	Escutcheon
100-450		Dial drive assembly
Consisting of the following:		
(24) 204-553	1	Dial mounting bracket
(25) 100-443	1	Dial pointer assembly
(26) 464-30-1	1	Plastic dial window
(27) 100-447	1	Dial pointer drive arm
(28) 250-63	1	3-48 x 1/8" screw
(29) 266-74	1	Nylon spiral follower
(30) 100-445	1	Zero set drive pulley (small)
(31) 100-449	1	Circular dial
(32) 100-444	1	Dial drive pulley (large)
(33) 455-42	1	Drive shaft bushing assembly
TOOLS		
(34)490-1	1	Plastic alignment tool
(35)490-23	1	#4 allen wrench
490-85	1	#8 allen wrench

PART No.	PARTS Per Kit	DESCRIPTION
HARDWARE		
#3 Hardware		
(36)250-251	2	3-48 x 3/8" flat head screw
(37)252-1	2	3-48 nut
(38)254-7	2	#3 lockwasher
#4 Hardware		
(39)250-156	1	4-40 x 1/8" setscrew
#6 Hardware		
(40)250-56	7	6-32 x 1/4" screw
(41)250-218	2	6-32 x 3/8" oval head screw
(42)250-26	4	6-32 x 5/8" screw
(43)250-40	2	6-32 x 1-1/2" screw
(44)252-3	11	6-32 nut
(45)253-25	4	Small #6 flat washer
(46)253-40	4	Large #6 flat washer
(47)254-1	11	#6 lockwasher
#8 Hardware		
(48)250-105	1	8-32 x 1/8" setscrew
(49)250-93	9	8-32 x 1/4" setscrew
(50)250-87	2	8-32 x 3/16" screw
(51)250-260	2	8-32 x 1/4" oval head screw
3/8" Control Hardware		
(52)252-7	6	3/8" control nut
(53)253-10	6	Control flat washer
(54)254-5	2	Control lockwasher
(55)259-10	2	Control solder lug
METAL PARTS		
(56)90-341	1	Cabinet
(57)203-453-1	1	Front panel

STEP-BY-STEP ASSEMBLY

Extra care should be taken when mounting the LMO, dial parts, and front panel. Proper installation of these parts will provide smooth operation of the main tuning.

NOTE: Because of the complexity of the dial mechanism used in this kit, it is very important that the front edges of the chassis be in perfect alignment. This alignment is checked at the factory; however, if the kit receives rough handling in shipping, the alignment might be changed. Therefore, this alignment should be checked at this time as follows:

Refer to Pictorial 5-1 for the following step.

( ) Check to see that the front flange of the chassis is in perfect alignment with the front edge of the side aprons. This can be done by placing a ruler or other straight edge along this surface as shown. Straighten the front flange of the chassis as required by carefully bending the flange. It may be necessary to loosen the chassis rail mounting hardware.

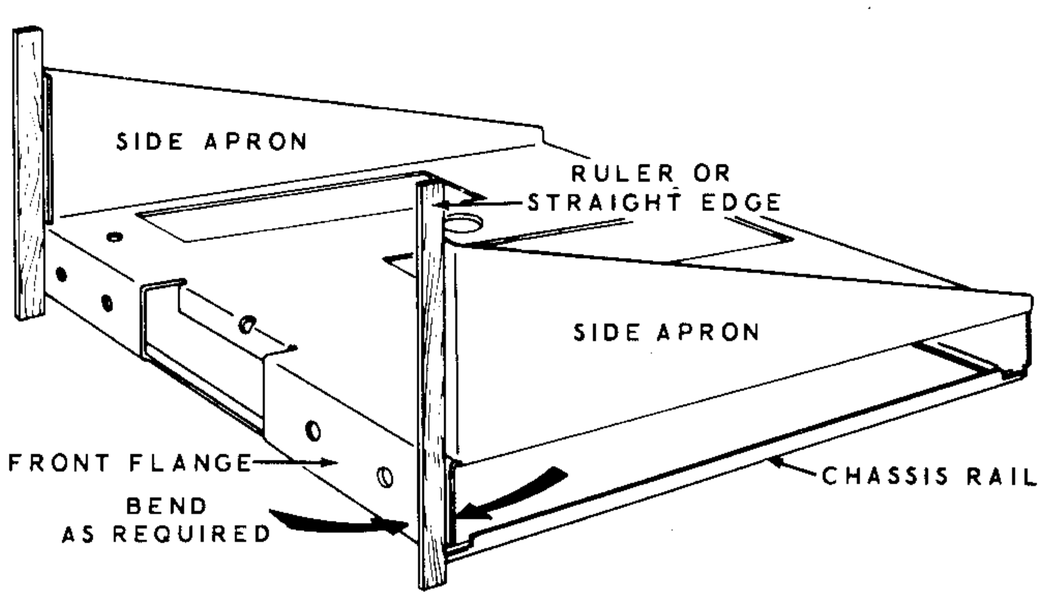

PICTORIAL 5-1

Refer to Pictorial 5-2 (fold-out from Page 59) for the following steps.

( ) Locate the LMO (linear master oscillator) and position it on top of the chassis so that the 6-32 spade bolts pass through the slots in the chassis as shown in Detail 5-2A. Temporarily secure the LMO with large #6 flat washers, #6 lockwashers, and 6-32 nuts. Position the spade bolts in the center of the slots. Tighten the nuts just enough to hold the LMO in place on the chassis.

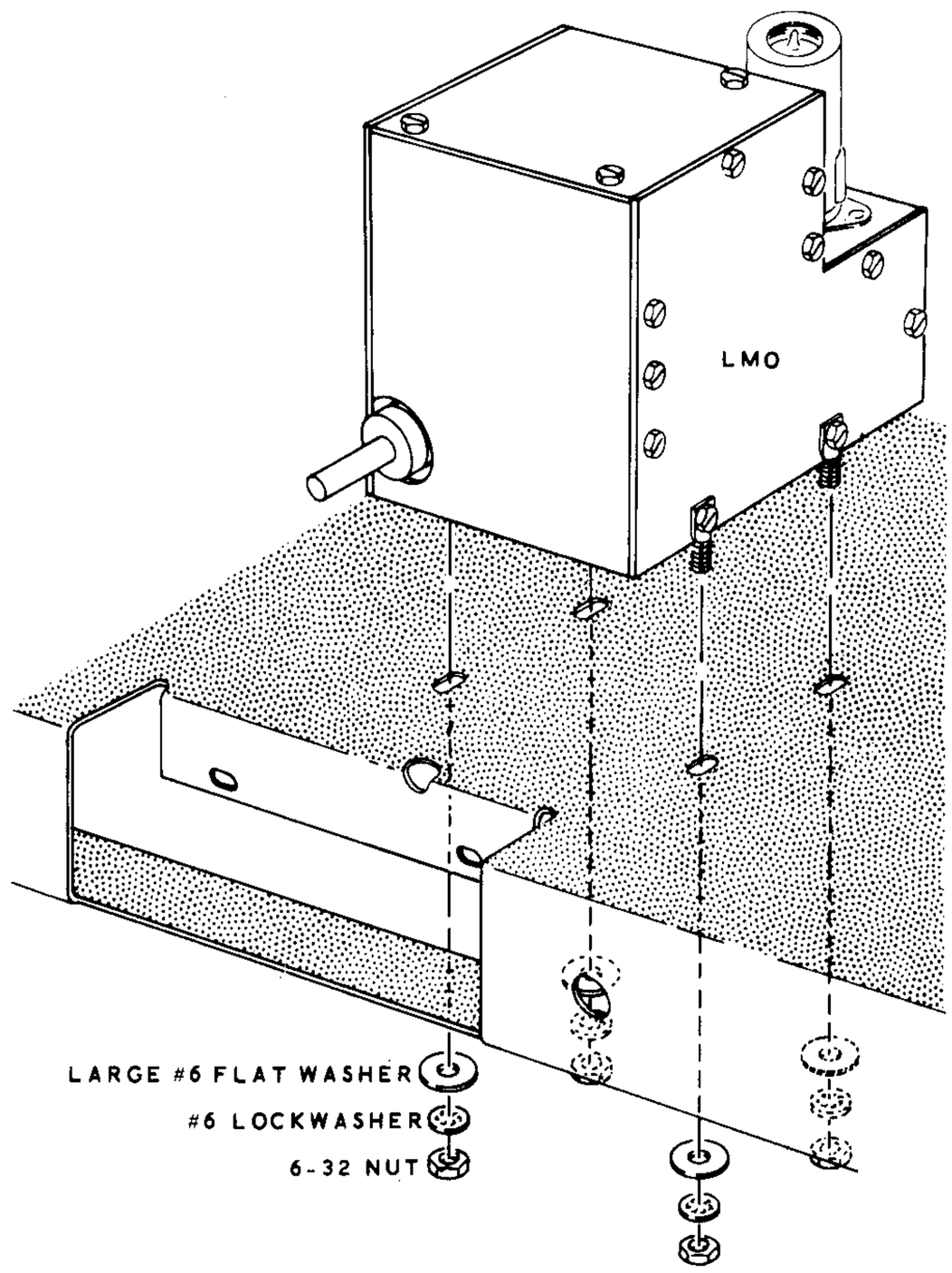

Detail 5-2A

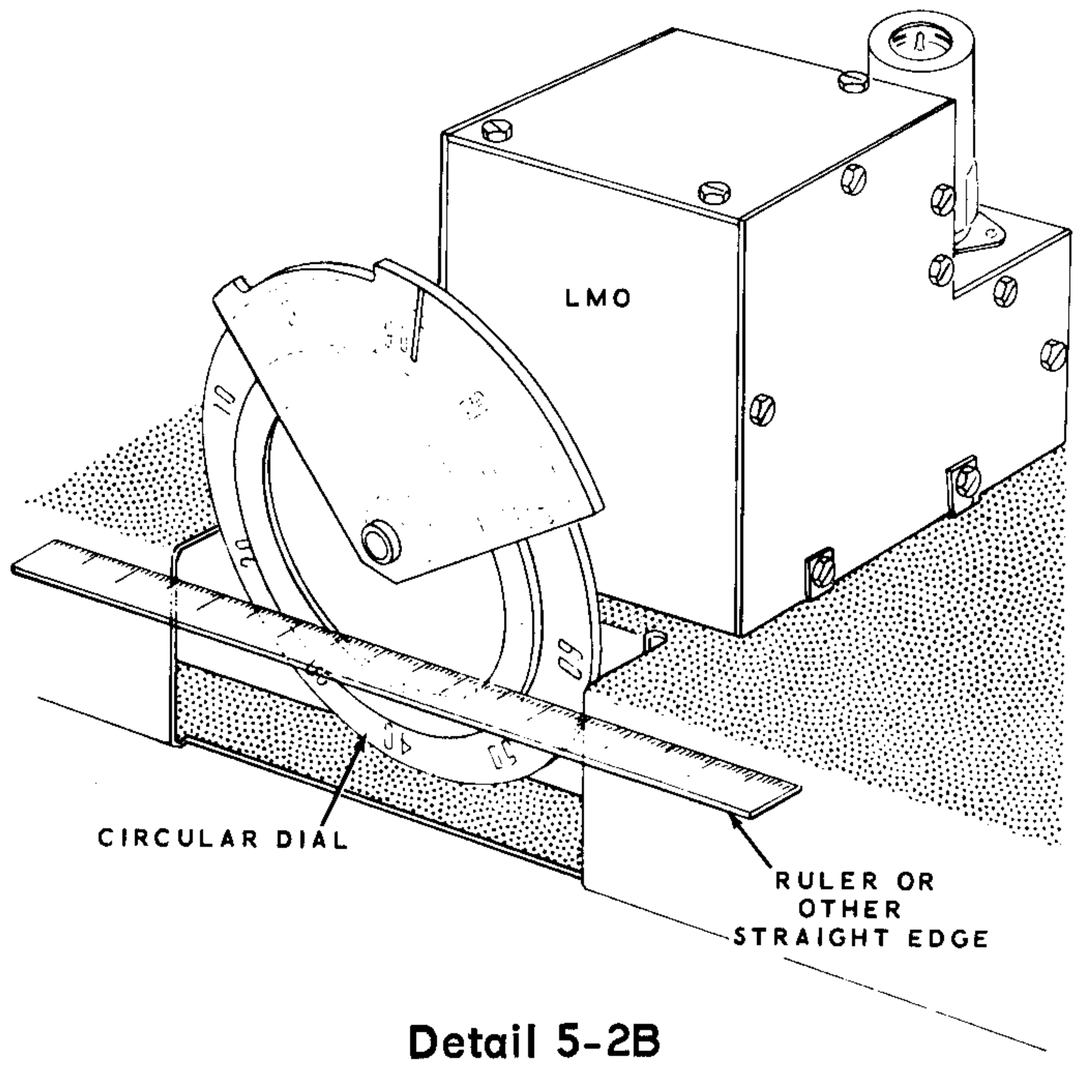

Detail 5-2B

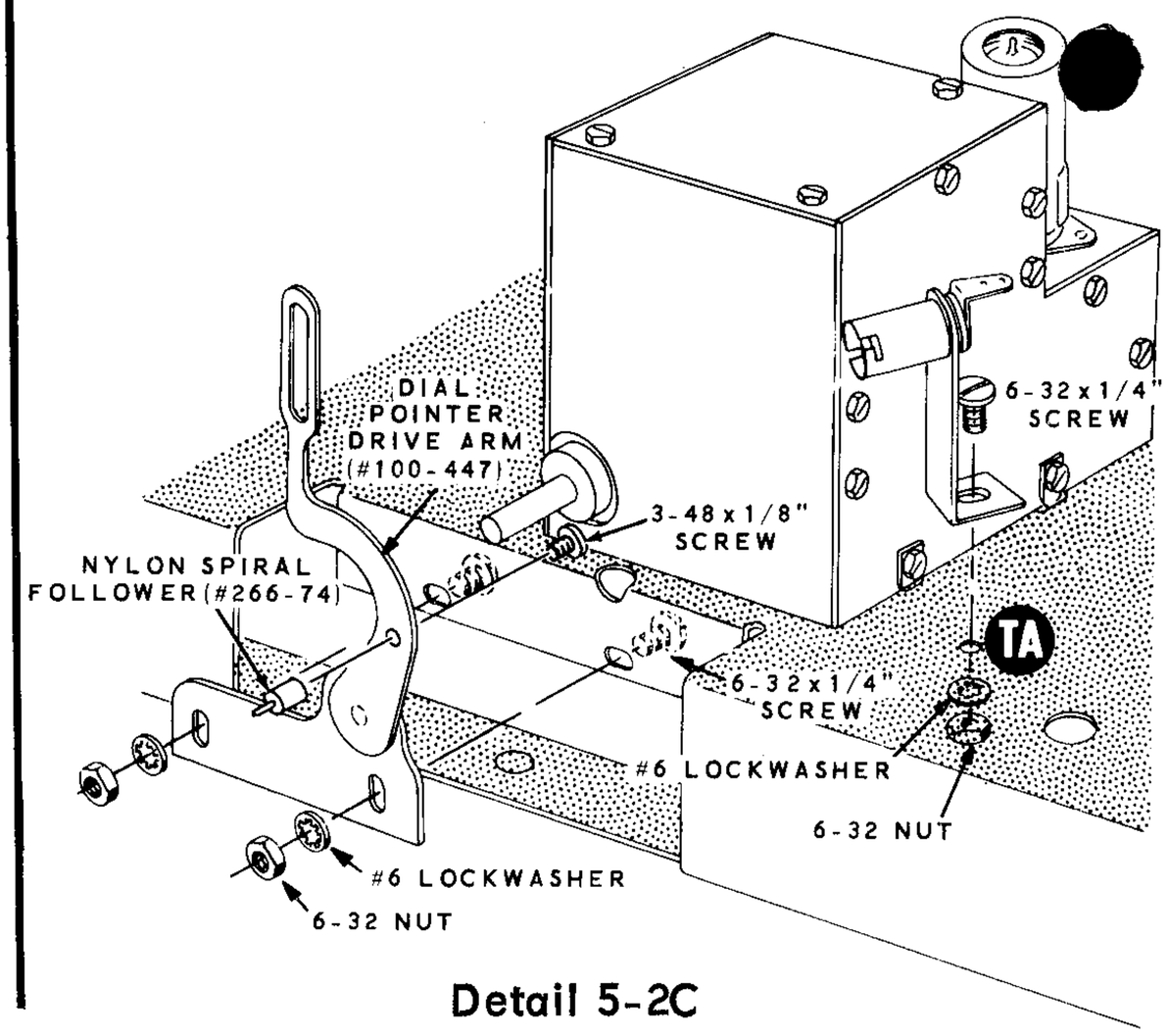

Detail 5-2C

( ) Slide the circular dial (located in the dial drive assembly package) on the shaft of the LMO. Place a ruler or other straight edge along the front of the chassis. Adjust the LMO so the circular dial is parallel to the front edge of the chassis. See Detail 5-2B. With the spade bolts centered in the slots, tighten the nuts that secure the LMO to the chassis.

( ) Remove the circular dial from the LMO shaft.

Refer to Detail 5-2C for the following steps.

( ) Mount a pilot lamp socket at TA using 6-32 x 1/4" hardware.

( ) Remove the parts from the dial drive assembly package.

( ) Mount the nylon spiral follower (#266-74) on the pointer drive arm (#100-447) using a 3-48 x 1/8" screw. Do not overtighten the screw as this would strip the threads in the spiral follower.

( ) Install the dial pointer drive arm on the chassis using 6-32 x 1/4" hardware. Position the hardware in the center of the chassis and dial pointer arm slots. Tighten the hardware just enough to hold the dial pointer drive arm in place.

( ) Turn the shaft of the LMO fully counterclockwise against its stop.

Refer to Detail 5-2D for the following steps.

( ) Start an 8-32 x 1/8" setscrew in the hub of the circular dial (#100-449).

( ) Position the circular dial on the LMO shaft with the 90 marking straight up, and the nylon spiral follower in the first groove (nearest the hub) of the circular dial.

NOTE: If the nylon spiral follower will not fit into the first groove of the circular dial, loosen the hardware that secures the dial pointer drive arm to the chassis. Then, move the dial pointer drive arm as required. Retighten the hardware.

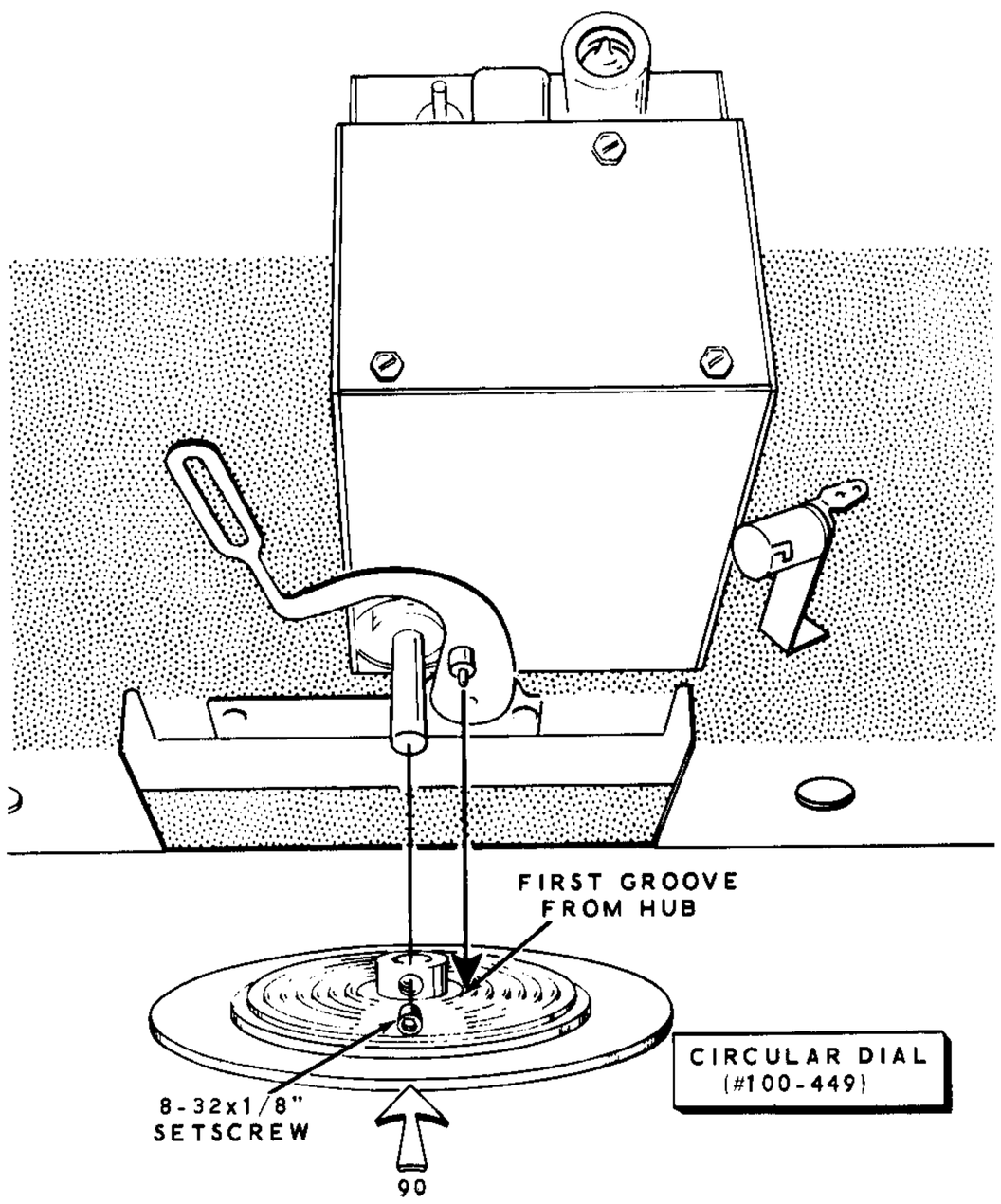

Detail 5-2D

( ) Push the circular dial onto the LMO shaft until the tip of the nylon spiral follower is to the bottom of the first groove in the circular dial, then tighten the setscrew.

( ) Refer to Detail 5-2E, and mount the plastic dial window (#464-30-1) and the dial pointer assembly (#100-443) to the dial mounting bracket (#204-553). Use 3-48 x 3/8" flat head hardware.

Refer to Pictorial 5-2 (fold-out from Page 59) for the following steps.

( ) Mount the dial mounting bracket on the LMO. Use the two top-front screws of the LMO. Position the stud from the rear of the dial pointer into the slot of the dial pointer drive arm.

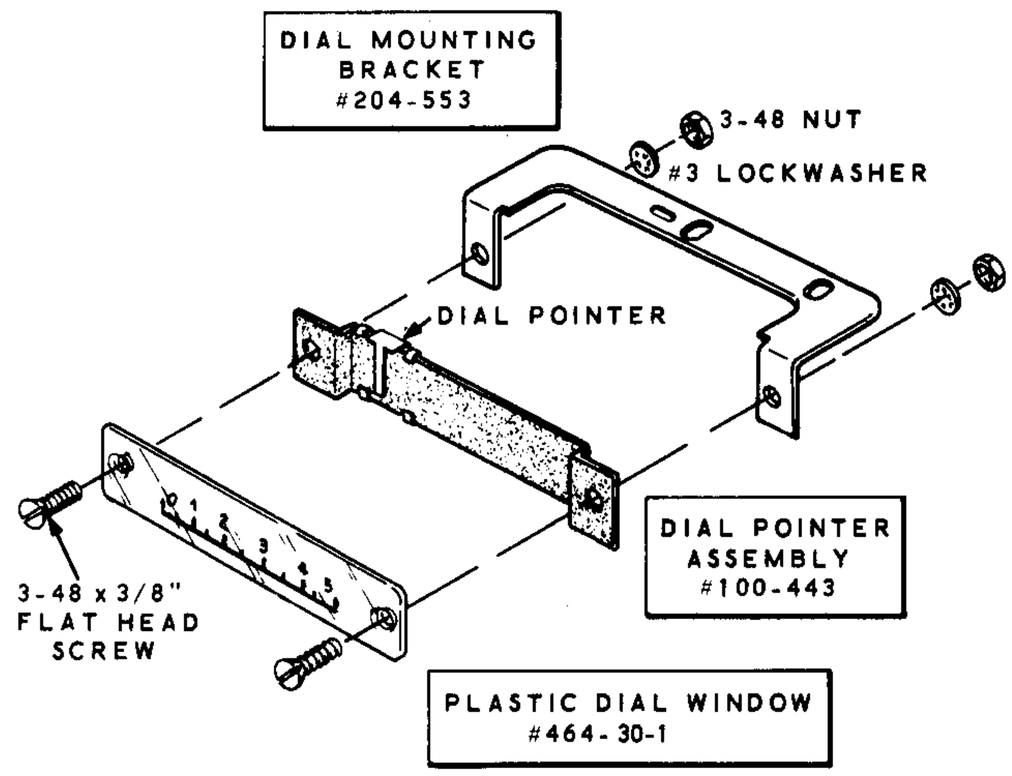

Detail 5-2E

NOTE: If the stud from the rear of the dial pointer will not fit into the slot in the dial pointer drive arm, loosen the mounting hardware of the dial pointer drive arm and move it as required.

( ) Check to see that the front of the plastic dial window is flush with the zero set dial on the circular dial as shown in the inset drawing on Pictorial 5-2. If not, loosen the two screws on the top of the LMO and adjust the dial mounting bracket as required. Retighten the screws.

NOTE: If the zero set dial does not rotate freely under the plastic dial window, bend the dial mounting bracket up to obtain sufficient clearance.

( ) Install a pilot lamp socket at TK on the dial mounting bracket with 6-32 x 1/4" hardware.

( ) Install #47 pilot lamps and pilot lamp shields at sockets TA and TK. Position the shields so their opening is toward the edge of the circular dial.

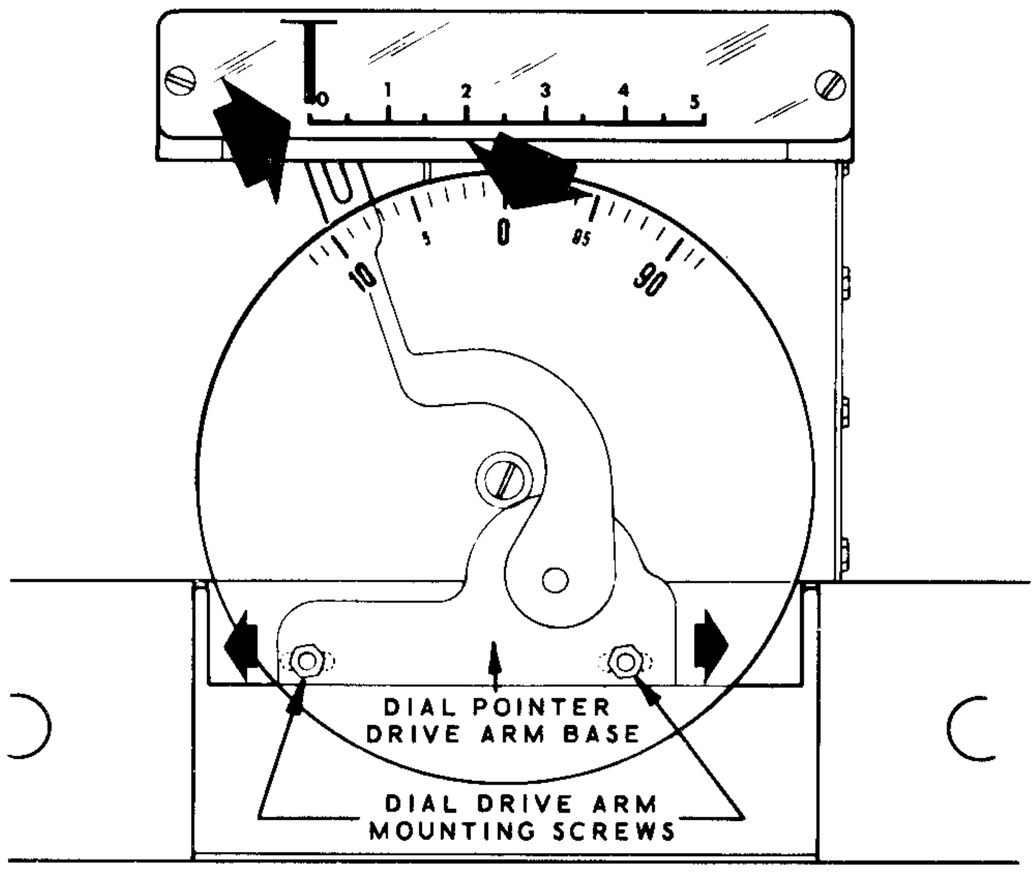

Detail 5-2F

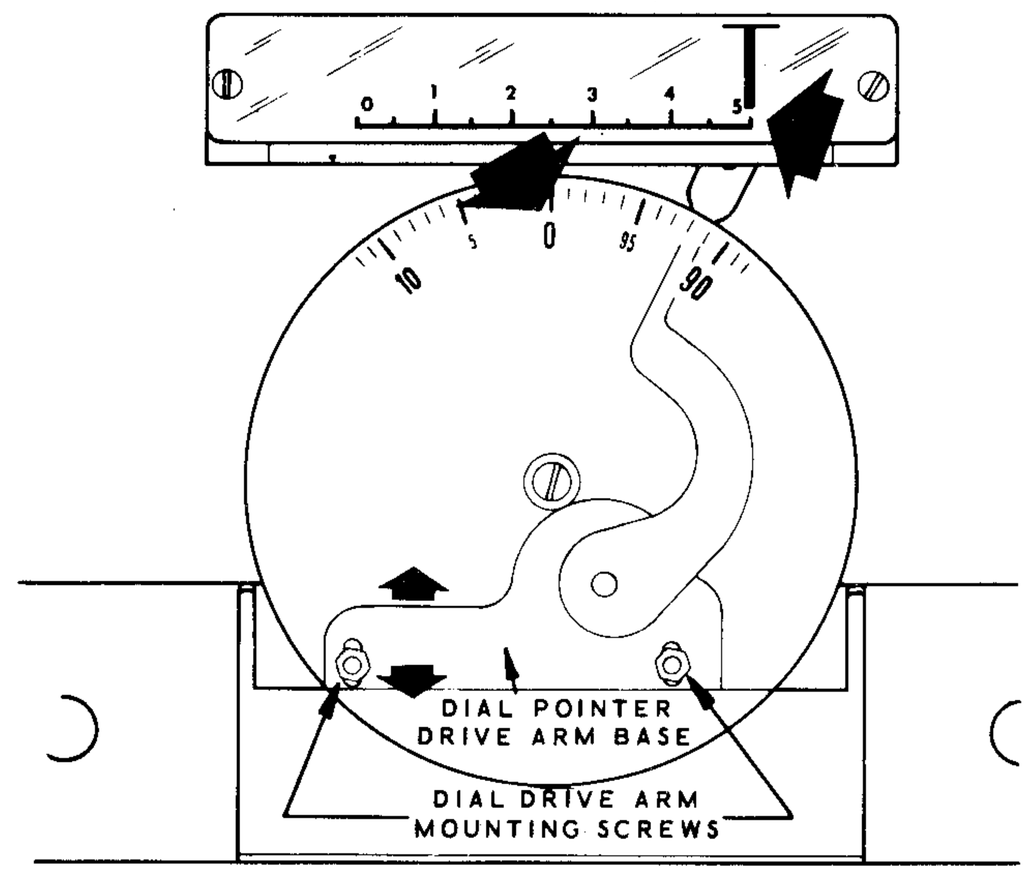

Detail 5-2G

Refer to Detail 5-2F for the following steps.

( ) Rotate the circular dial clockwise from the fully counterclockwise position (90 marking) to the first zero marking. The dial pointer should be at the zero marking on the plastic dial window. If not, perform one of the following two steps.

( ) 1. If the dial pointer is to the right of the zero marking, loosen the dial pointer drive arm mounting screws, and move the dial pointer drive arm base to the right until the dial pointer is at zero. Do not move the dial pointer drive arm base up or down. Retighten the screws.

( ) 2. If the dial pointer is to the left of the zero marking, loosen the dial pointer drive arm mounting screws, and move the dial pointer drive arm base to the left until the dial pointer is at zero. Do not move the dial pointer drive arm base up or down. Retighten the screws.

Refer to Detail 5-2G for the following steps.

( ) Rotating the circular dial in a clockwise direction one revolution (zero to zero) should move the dial pointer to the 1 marking on the plastic dial window. Each time the circular dial is rotated one revolution clockwise, the dial pointer should advance one more number on the plastic dial window. After five complete revolutions the dial pointer should be very close to the 5 marking on the plastic dial window. If not, perform one of the following two steps.

( ) 1. If the dial pointer is to the left of the 5 marking, loosen the dial pointer drive arm mounting screws, and move the dial pointer drive arm base up until the dial pointer is at the 5 marking. Do not move the dial pointer drive arm base to the left or right. Tighten the screws.

( ) 2. If the dial pointer is to the right of the 5 marking, loosen the dial pointer drive arm mounting screws, and move the dial pointer drive arm base down until the pointer is at the 5 marking. Do not move the dial pointer drive arm base to the left or right. Tighten the screws.

This adjustment may affect the dial pointer setting at the zero marking. Repeat the entire procedure as many times as necessary to obtain proper dial and pointer calibration. The dial pointer need not be exactly at a number when the circular dial is at one of its five possible zero settings; however, following the preceding steps should permit fairly close calibration. Rotating the circular dial from the fully counterclockwise position to the fully clockwise position will cause the dial pointer to go to the left of the zero marking and to the right of the 5 marking on the plastic dial window.

( ) Check the mechanical operation of the drive assembly by rotating the circular dial plate until the LMO shaft hits its fully clockwise stop. At this position the dial plate should have rotated five full turns plus enough to have the dial read approximately 10. The operation should be smooth with no binding or rubbing of the drive pawl in the circular dial groove. If there is any binding, loosen the setscrew in the hub of the circular dial plate and move it out toward the end of the LMO shaft a very small amount to relieve any binding and retighten the setscrew.

Refer to Pictorial 5-3 for the following steps.

( ) Place a soft cloth over your work area to protect the finish on the front panel in the following steps.

( ) Position the front panel lettered side down as shown.

NOTE: In the following step, it may be necessary to sand or file off any excess paint or material from the top inside edge of the front panel to allow the excutcheon to be installed.

( ) Install the dial escutcheon (#446-40). Be sure that the tabs at the top of the escutcheon fit behind the front panel. Push the escutcheon as far as possible to the top of the front panel. Use the drive shaft bushing (#455-42) as shown in the inset drawing. Be sure the bushing is inserted from the inside of the front panel. Do not tighten the nut at this time.

( ) Mount the 3-position rotary switch (#63-335) at FD using a control lockwasher, control flat washer, and a control nut.

( ) Mount the 4-position rotary with snap switch (#63-421) at FB using a control solder lug, a control flat washer, and a control nut.

( ) Mount the 500 KΩ control with switch (#19-66) at FC using a control solder lug, control flat washer, and a control nut.

( ) Install a threaded bushing at FF using a control lockwasher, a control flat washer, and a control nut. Do not tighten the nut at this time.

( ) Remove the shorting clip from between the lugs of the meter (#407-99).

( ) Mount the meter at FA using the lockwashers and nuts furnished with the meter. Do not overtighten the nuts, as the plastic meter case can be broken.

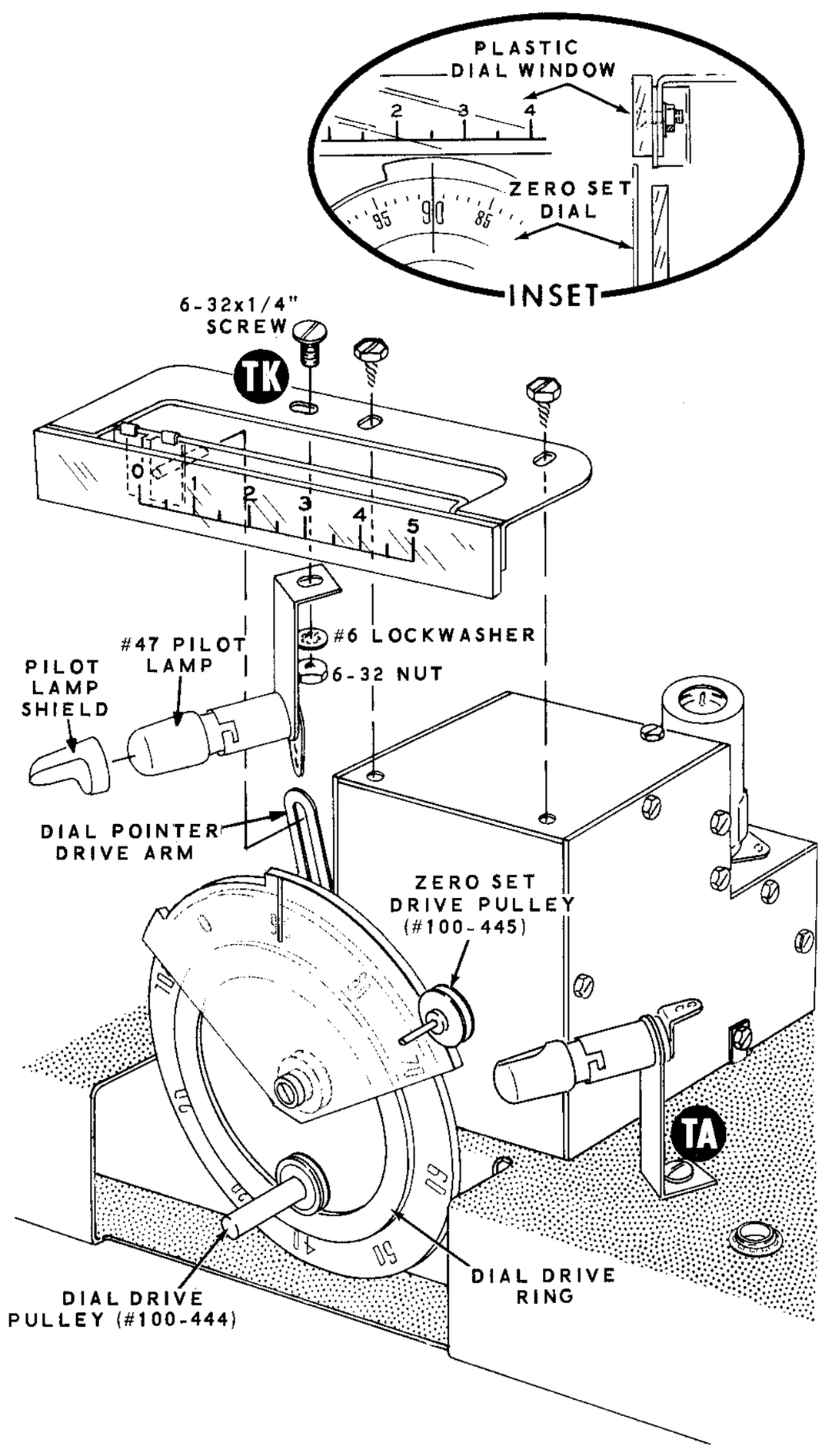

PICTORIAL 5-2

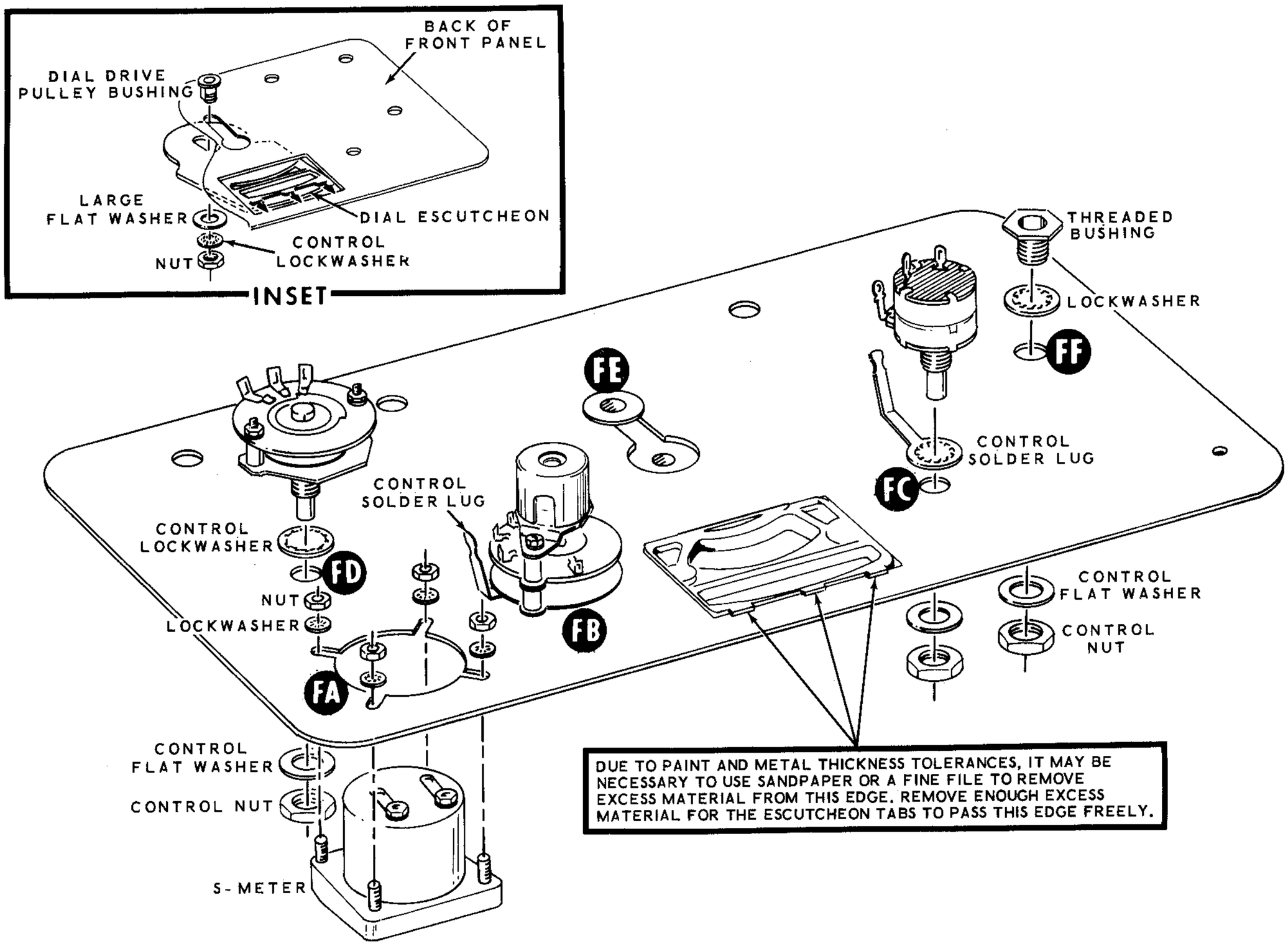

PICTORIAL 5-3

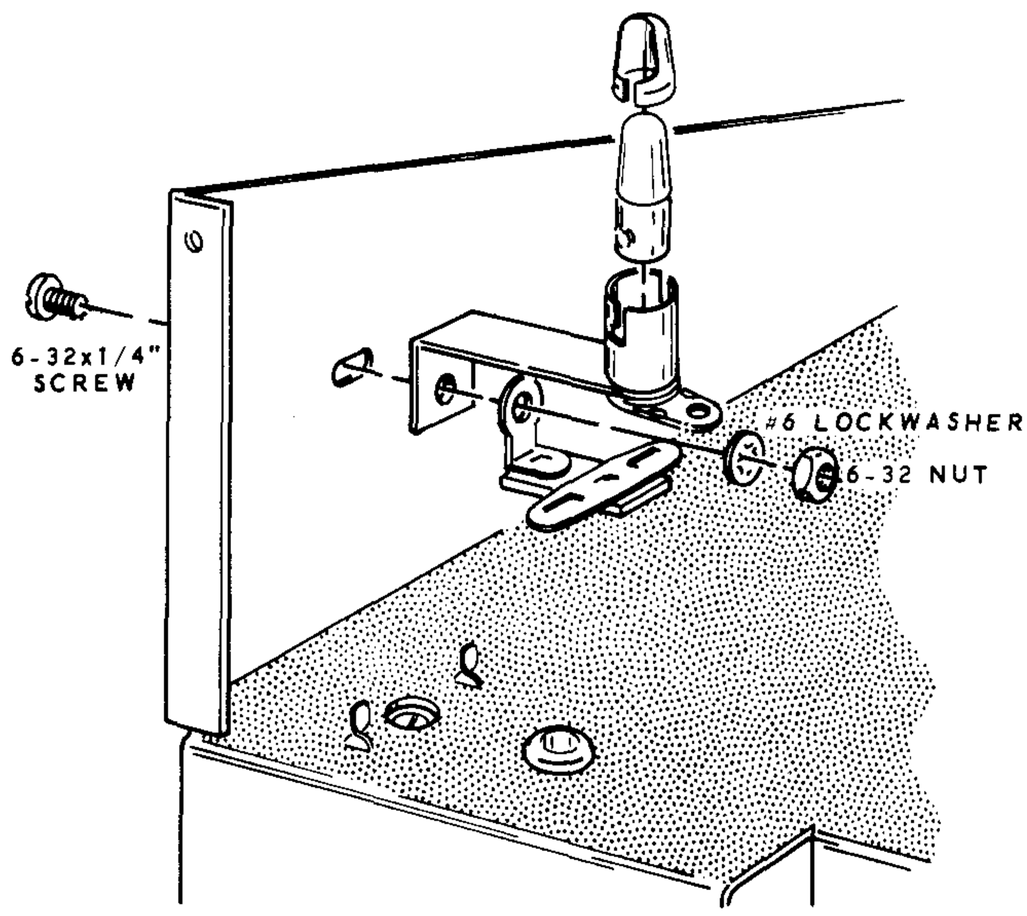

Detail 5-4A

Refer to Pictorial 5-4 (fold-out from this page) for the following steps.

( ) Referring to Detail 5-4A, mount a pilot lamp socket and a 1-lug terminal strip on the side apron of the chassis. Use 6-32 x 1/4" hardware.

( ) Install a #47 pilot lamp and pilot lamp shield at TH. Position the shield so its opening is to the front of the chassis.

Refer to Detail 5-4B for the following steps.

( ) Remove the control nuts and control flat washers at FG and FK on the front of the chassis.

( ) Apply a very thin layer of silicone grease on the shaft of the dial drive pulley (large shaft). Be very careful not to get grease on the pulley or any other part of the kit.

( ) Slide the shaft of the dial drive pulley into the dial drive bushing. Push the bushing up as far as possible.

( ) Push the zero set drive pulley (small shaft) onto the zero set dial. Position the pulley and dial as shown.

( ) Carefully position the front panel on the chassis. Place the zero set drive shaft through the small hole in the upper right-hand corner of the escutcheon. Be sure no wires are pinched between the front panel and the chassis.

( ) Replace the control flat washers and control nuts at FH and FJ. Do not tighten the control nuts at this time.

NOTE: The following adjustment of the front panel is critical and must be done carefully to obtain smooth operation of the dial mechanism.

( ) Carefully move the front panel so the hole in the center of the escutcheon is aligned with the end of the LMO shaft. See the inset drawing on Detail 5-4B. With the bottom of the front panel parallel to the bottom edge of the chassis tighten the control nuts at FH and FJ.

( ) Install control flat washers and control nuts at FG and FK.

( ) Install 6-32 x 3/8" oval head hardware at the top corners of the front panel.

( ) Push the dial drive bushing at FE down so the dial pulley engages with the circular dial drive ring; there should be just enough pressure to rotate the circular dial without slippage. Tighten the dial drive bushing. The amount of torque required to turn the circular dial can be adjusted by moving the dial drive bushing up or down.

( ) Push the zero set drive pulley flush with the inside of the dial escutcheon, then install the 7/16" diameter knob on the zero set drive pulley shaft. Use a 4-40 x 1/8" setscrew. Be sure the zero set dial does not rub against the circular dial plate. They should be separated by at least 1/64".

Refer to Pictorial 5-4 for the following steps.

NOTE: It may be easier to perform the next two steps if the control is rotated slightly. Be sure to return the control to its original position after the steps are completed.

( ) Connect a 1" bare wire from lug 1 (S-1) to the solder lug (NS) of control FC.

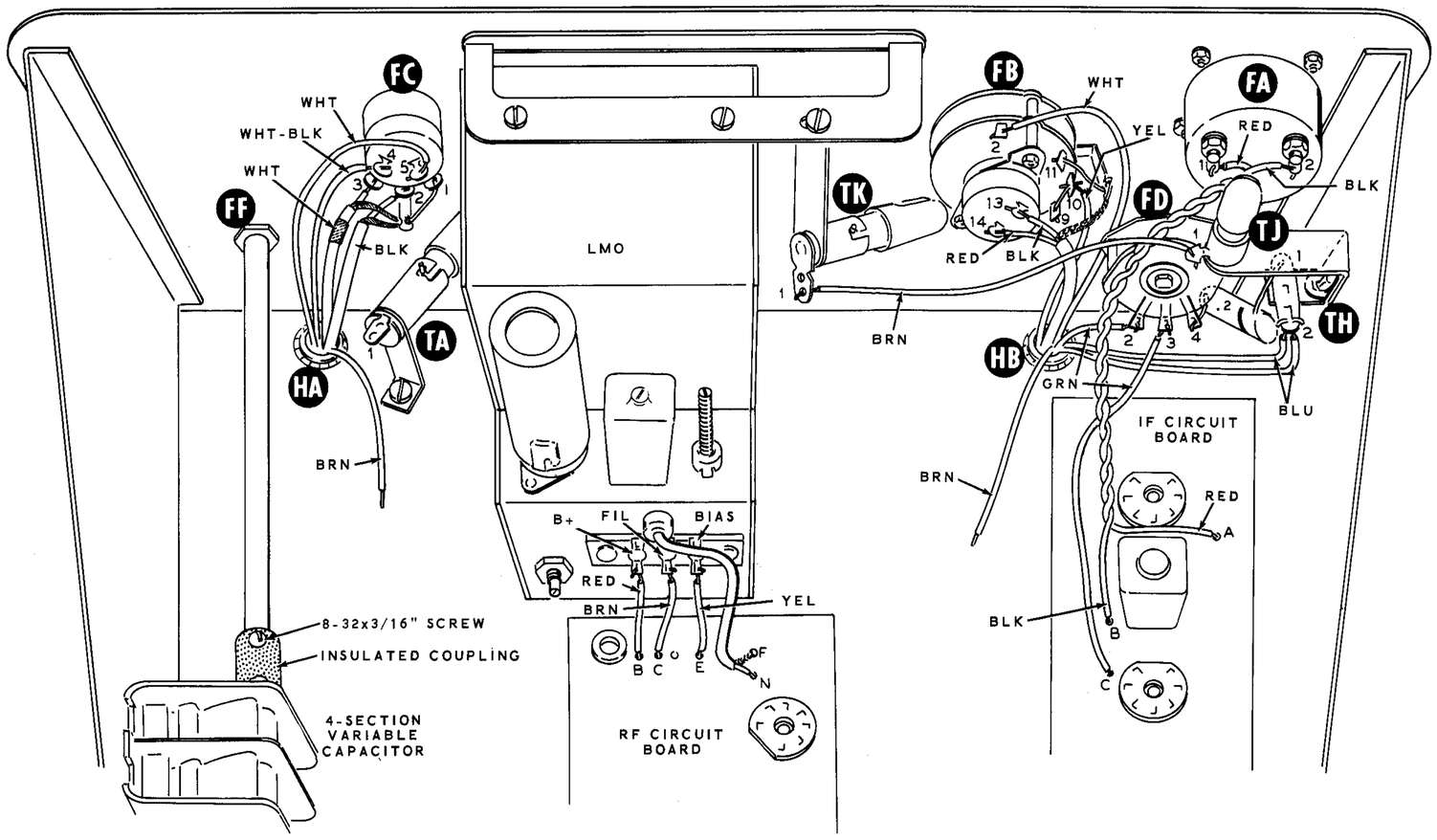

PICTORIAL 5-4

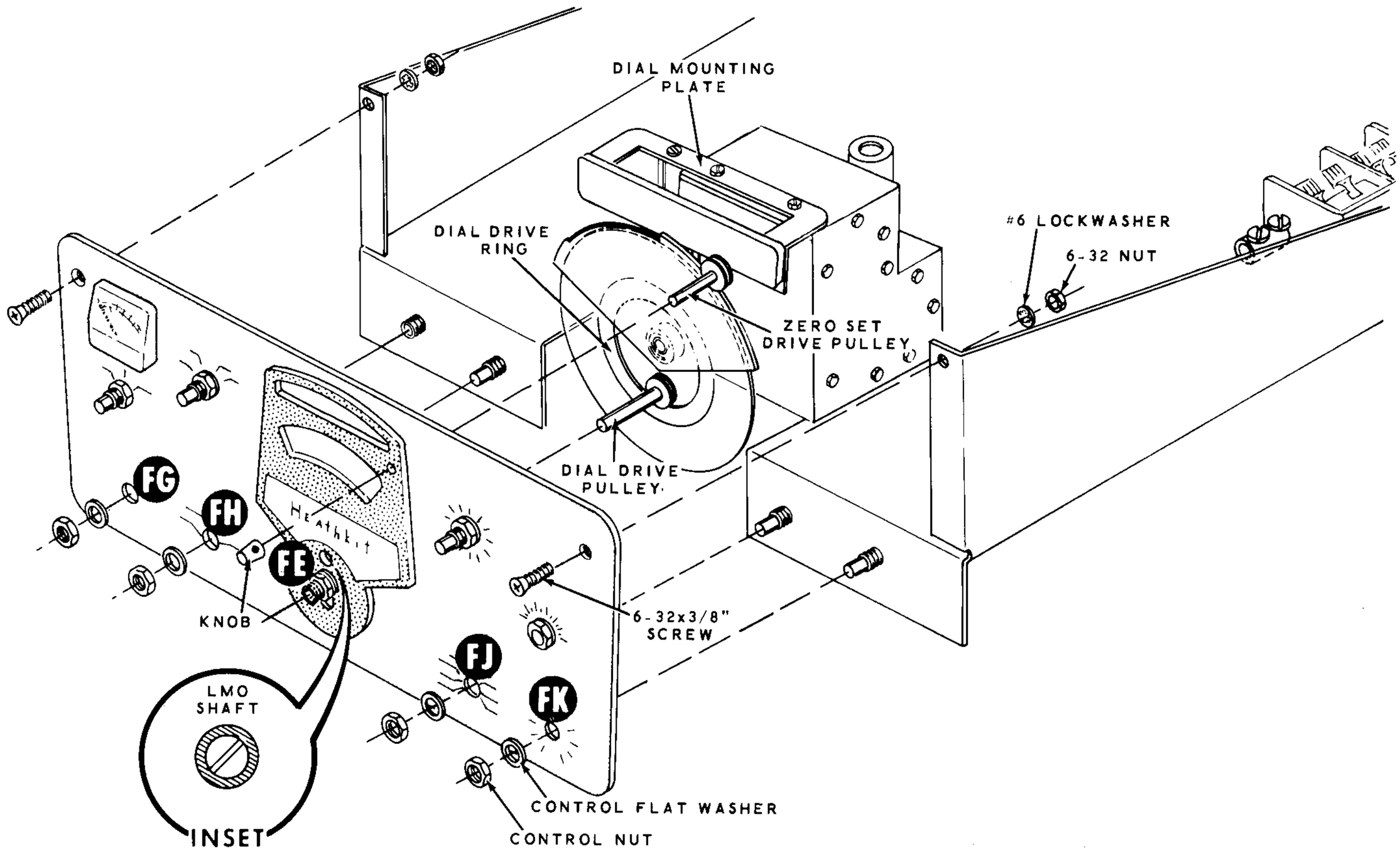

Detail 5-4B

Connect the wires from hole HA as follows:

( ) Black coaxial cable: inner lead to lug 2 (S-1) of control FC and the shield to the solder lug (NS).

( ) White coaxial cable: inner lead to lug 3 (S-1) and the shield to the solder lug (S-3) of control FC.

( ) White-black to lug 4 of control FC (S-1).

( ) White to lug 5 of control FC (S-1).

( ) The brown wire will be connected later.

( ) Connect a 3/4" bare wire between lugs 9 (S-1) and 10 (NS) of switch FB.

( ) Connect a 1" bare wire between lug 11 (S-1) and the solder lug (NS) of switch FB.

( ) Carefully pry the switch cover from switch FB with a screwdriver. Set the cover aside temporarily.

Connect the wires extending from hole HB as follows:

( ) Green to lug 2 of switch FD (S-1).

( ) White to lug 2 of switch FB (S-1).

( ) Yellow to lug 10 of switch FB (S-2).

( ) Two-wire shielded cable: red inner lead to lug 14 (S-1), black inner lead to lug 13 (S-1), and the shield to the solder lug (S-2) of switch FB.

( ) Replace the switch cover on switch FB.

( ) Both blue to lug 2 of terminal strip TH (S-2).

The brown wire will be connected later.

( ) Prepare the following lengths of hookup wire:

COLOR	LENGTH
Green	5-1/2"
Red	7-1/2"
Black	7-1/2"
Brown	4"
Brown	1-1/2"

( ) Connect a 5-1/2" green wire from lug 3 of switch FD (S-1) to hole C in the IF circuit board (S-1).

( ) Twist together a 7-1/2" red wire and a 7-1/2" black wire to form a twisted pair of approximately three turns per inch.

( ) At one end of this twisted pair, connect the red wire to lug 1 (S-1) and the black wire to lug 2 (S-1) of meter FA.

( ) At the other end of this twisted pair, connect the red wire to hole A (S-1) and the black wire to hole B (S-1) in the IF circuit board.

( ) Connect a 4" brown wire from lug 1 of pilot lamp socket TK (S-1) to lug 1 of pilot lamp socket TJ (NS).

( ) Connect a .2 μfd Mylar capacitor from lug 4 of switch FD (S-1) to lug 1 of terminal strip TH (S-1). Note the position of the marked end.

( ) Connect a 1-1/2" brown wire from the FIL lug of the LMO (S-1) to hole C in the RF circuit board (S-1).

( ) Connect the free end of the red wire extending from hole B in the RF circuit board to the B+ lug of the LMO (S-1).

( ) Connect the free end of the yellow wire extending from hole E in the RF circuit board to the BIAS lug of the LMO (S-1).

( ) Refer to Detail 5-4C, and prepare the ends of a 4" length of coaxial cable. Connect a phono plug to the end of this cable with the longer inner lead.

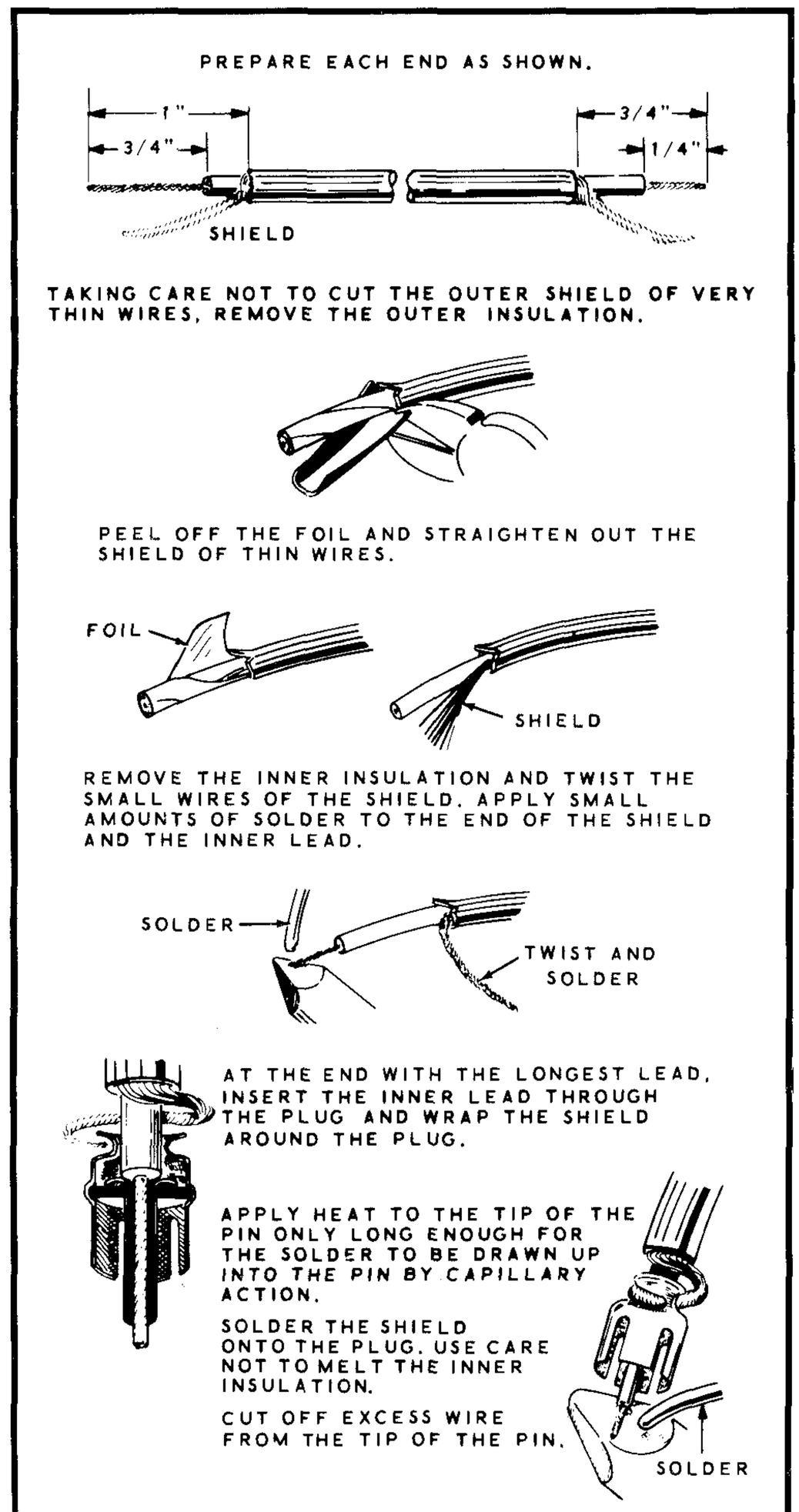

Detail 5-4C

( ) Plug the phono plug on this cable into the phono socket of the LMO. At the free end of this cable, connect the inner lead in hole N (S-1) and the shield in hole F (S-1) of the RF circuit board.

( ) Start 8-32 x 3/16" screws in the two tapped holes of the insulated coupling.

( ) Push one end of this insulated coupling onto the shaft of the 4-section variable capacitor. Push the coupling on as far as possible.

( ) Pass the large diameter shaft through bushing FF of the front panel and into the insulated bushing on the 4-section variable capacitor. Push the shaft into the coupling as far as possible, and tighten the screws. Now, tighten the bushing at FF.

This completes the top chassis wiring of the Receiver. Check to see that all connections (except lugs 1 of pilot lamp sockets TA and TJ) are soldered, and shake out any wire clippings or solder splashes.

Refer to Pictorial 5-5 and Detail 5-5A for the following steps.

( ) Install a metal coupling on the shaft of switch D. Use a 6-32 x 1/4" screw.

( ) Place a split bushing in the open end of this coupling.

( ) Pass the small diameter shaft through the hole in the center of control FK, and into the coupling on switch D. Secure the shaft in the coupling with a 6-32 x 1/4" screw.

( ) Turn all switch and control shafts fully counterclockwise.

( ) Install the lever knob on the large diameter shaft at the Converter-RF Gain position. Position the lever as shown.

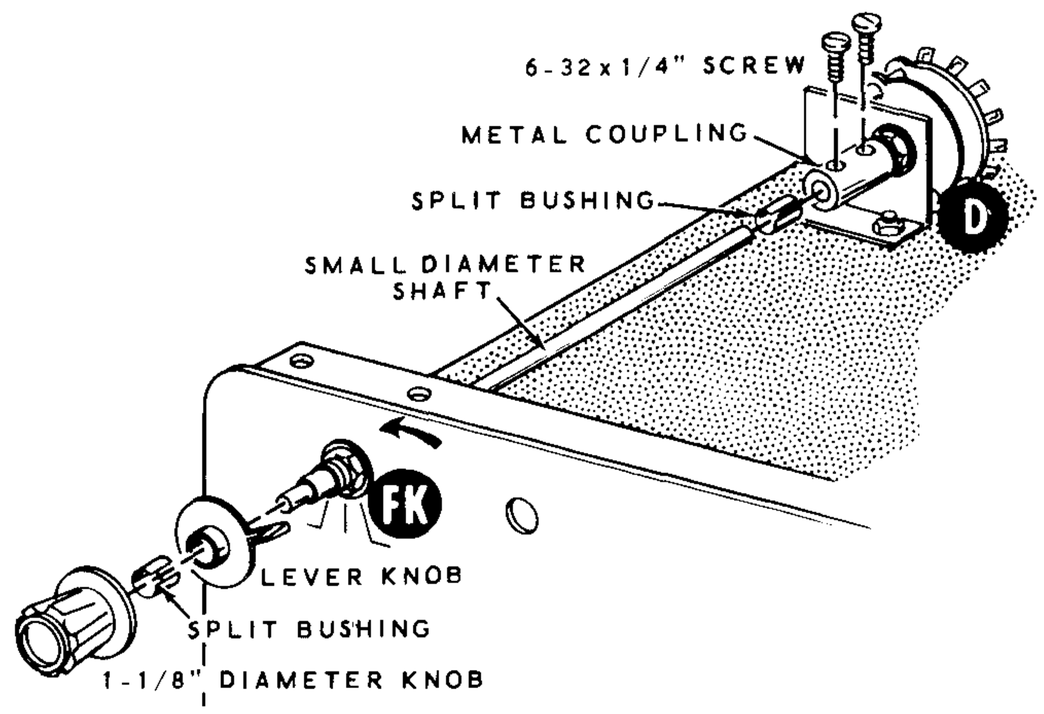

Detail 5-5A

( ) Install a 1-1/8" diameter knob with a split bushing on the small diameter shaft at the converter-RF Gain position (location FK). Use an 8-32 x 1/8" setscrew. Position the knob pointer as indicated by the arrow.

( ) Install the 2-1/2" diameter knob on the main tuning (LMO) shaft. Use two 8-32 x 1/4" setscrews.

( ) Install 1-1/8" knobs on the remaining switch and control shafts. Use 8-32 x 1/4" setscrews. Position the knob pointers as indicated by the arrows.

( ) Remove the protective backing from the SB-301 nameplate, and press it firmly in place in the indentation of the escutcheon.

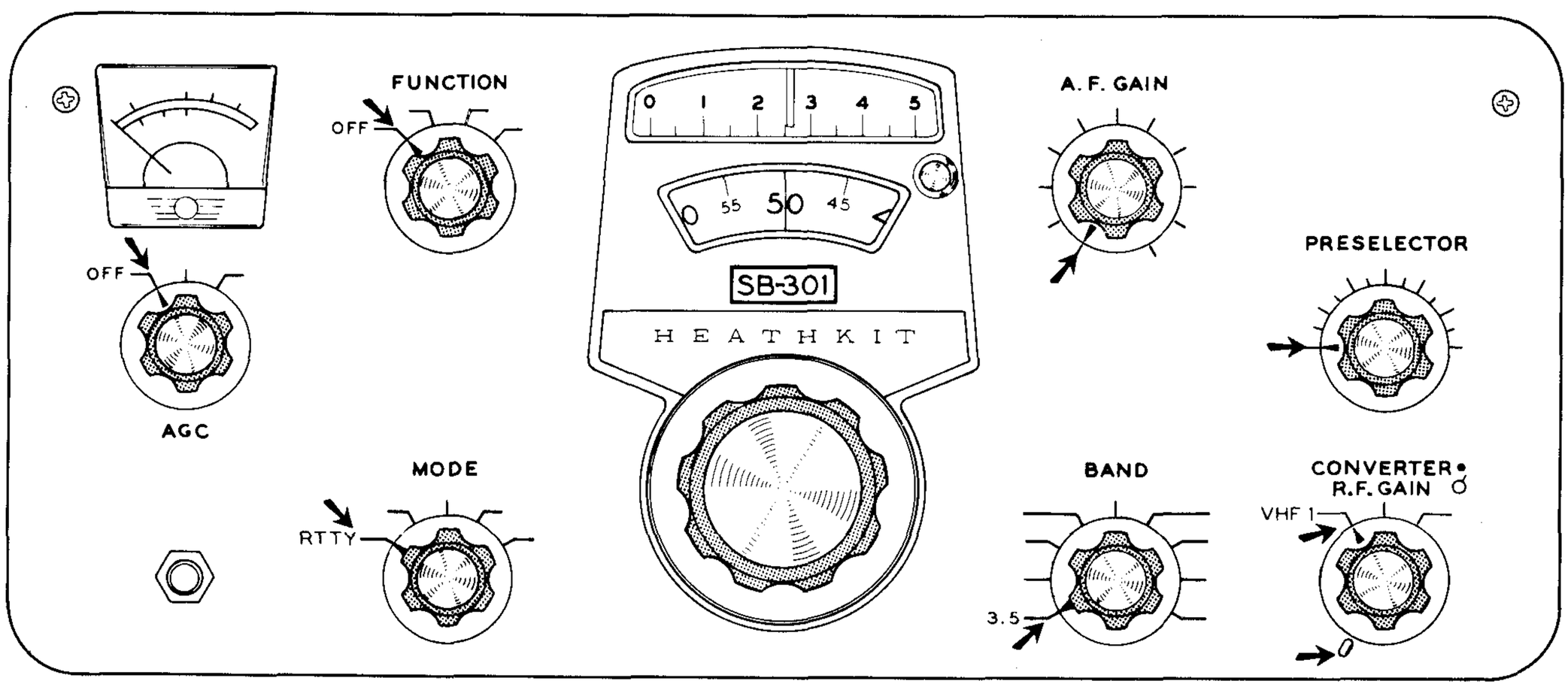

PICTORIAL 5-5

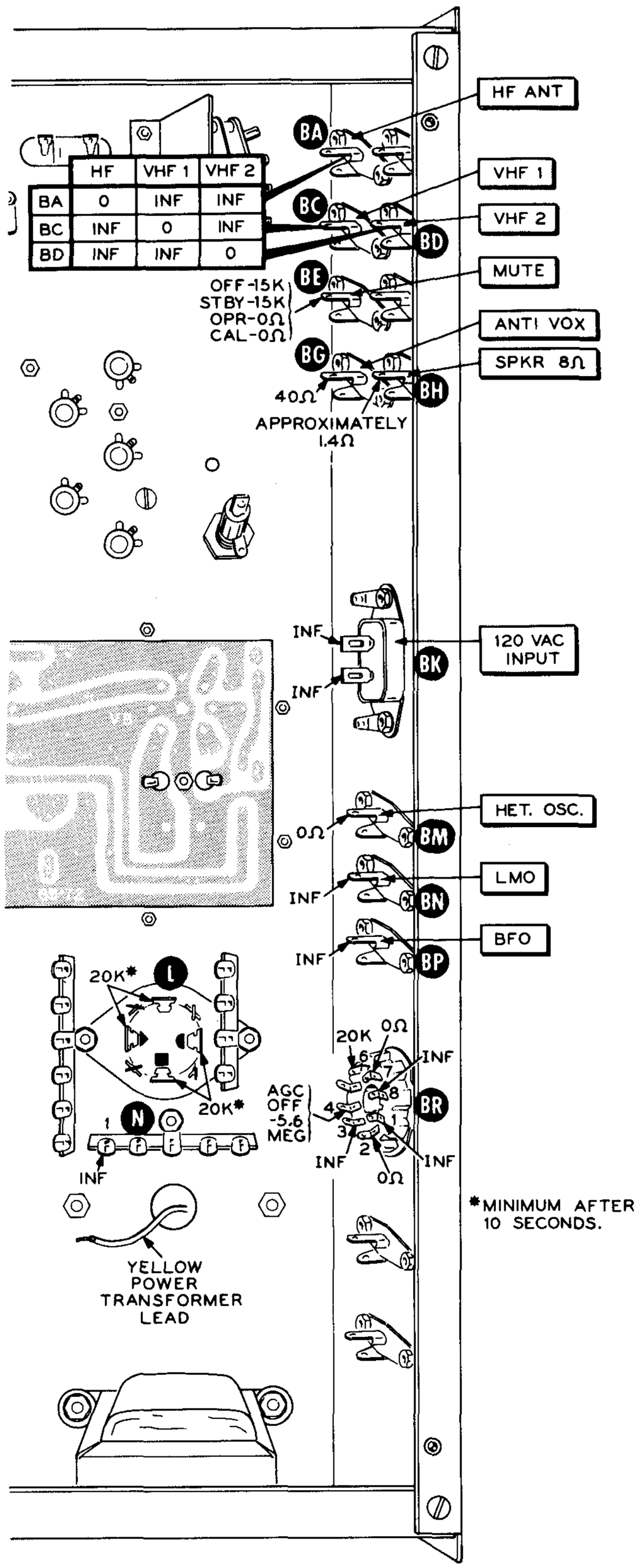
HF ANT
VHF 1
VHF 2
MUTE
ANTI VOX
SPKR 8Ω
120 VAC INPUT
HET. OSC.
LMO
BFO
BA
BC
BD
BE
BG
BH
BK
BM
BN
BP
BR
L
N
HF VHF 1 VHF 2
BA 0 INF INF
BC INF 0 INF
BD INF INF 0
OFF-15K
STBY-15K
OPR-0Ω
CAL-0Ω
40Ω
APPROXIMATELY 1.4Ω
INF
0Ω
20K*
20K
AGC OFF -5.6 MEG
YELLOW POWER TRANSFORMER LEAD
*MINIMUM AFTER 10 SECONDS.

Figure 1-1

INITIAL TEST

Carefully examine the wiring for possible short circuits. Be sure that all wire clippings and solder splashes are removed from the Receiver. The following resistance checks should be made before you apply power to the Receiver. The purpose of these checks is to make sure there are no direct short circuits or leakage paths present, since these could seriously damage the Receiver. If your resistance readings vary more than ±20% from those listed, carefully recheck your work.

( ) Check the mechanical zero of the front panel meter. If necessary, adjust the screw in the front of the meter until the pointer is on zero.

CONTROL SETTINGS

Set the front panel controls as follows:

FUNCTION - OFF.
AGC - OFF.
MODE - LSB.
AF GAIN - Fully counterclockwise.
PRESELECTOR - Fully counterclockwise.
BAND - 3.5.
CONVERTER - VHF 1.
RF GAIN - Fully counterclockwise.

( ) Remove the tube shield and tube from the LMO.

( ) Be sure the yellow power transformer lead (near terminal strip N) and the two brown wires extending from the top of the chassis (near pilot lamp sockets TA and TJ) are not touching any part of the Receiver.

( ) Using an ohmmeter, measure the DC resistance from the points indicated on Figure 1-1 to chassis ground. Be sure to measure the four resistances at phono socket BE with the FUNCTION switch in the indicated positions. The readings at capacitor L will take a few seconds to reach the indicated resistance because of the slow charging rate of the capacitor.

( ) Connect the yellow power transformer lead to lug 1 of terminal strip N (S-5).

This completes the resistance checks of the Receiver.

ALIGNMENT

Refer to Figure 2-1 (fold-out from Page 71) for the following steps.

( ) Connect the free end of the brown wire extending from hole HA to lug 1 of pilot lamp socket TA (S-1).

( ) Connect the free end of the brown wire extending from hole HB to lug 1 of pilot lamp socket TJ (S-2).

( ) Replace the tube and tube shield in the LMO.

( ) Install the crystals in their respective sockets. The crystal frequencies are stamped on top of the crystals and lettered on the chassis and RF circuit board.

( ) Install the tubes in their appropriate sockets.

NOTE: Perform only one of the next two steps.

( ) If the Receiver was wired for 120 VAC, install the 2-ampere slow-blow fuse in the fuseholder.

( ) If the Receiver was wired for 240 VAC, install a 1-ampere slow-blow fuse in the fuseholder. NOTE: This fuse is not furnished with the kit.

( ) Refer to Figure 1-1, on Page 64, and recheck the resistance readings at the two indicated lugs of capacitor L to be sure they have not changed.

READING RECEIVER FREQUENCY

To read frequency, add to the BAND switch setting in megahertz, the slide rule pointer setting in hundreds of kilohertz, and the circular dial setting in kilohertz.

For example: If the BAND switch is set to 3.5, the slide rule pointer is between 2 and 3, and the circular dial is set to 53, the frequency is 3.753 MHz. If the BAND switch is set to 14.0, the slide rule pointer between 0 and 1, and the circular dial is set to 12, the frequency is 14.012 MHz.

NOTE: A speaker should be connected to the Receiver whenever it is turned on.

CRYSTAL CALIBRATOR ALIGNMENT

( ) Set the front panel controls as follows:

PRESELECTOR - Any place.
RF GAIN - Full clockwise
BAND - 3.5 MHz.
AF GAIN - 3 o'clock.
AGC - FAST.
FUNCTION - OFF.
MODE - LSB.
Main Tuning - 3.5 MHz.
CONVERTER - HF.

( ) Insert the line cord into the rear of the Receiver.

( ) Plug the line cord into an electrical outlet supplying the voltage for which the Receiver was wired (120 or 240 VAC, 50/60 Hz). CAUTION: Connecting the Receiver to the wrong voltage could result in severe damage to the Receiver.

( ) Turn the FUNCTION switch to the OPR position and adjust the S-METER ADJ control (on top of the chassis) for a zero reading on the S-Meter. NOTE: The meter pointer will go to full scale until tubes are warmed up.

( ) Turn the FUNCTION switch to OFF.

( ) Couple the antenna connector of the SB-301 Receiver to the antenna connector of another receiver capable of receiving WWV at 2.5 MHz, 5 MHz, 10 MHz, or 15 MHz. If this is not possible, a receiver tuned to a standard broadcast station, operating at an even multiple of 100 kHz, can be used. Refer to Figure 2-1, on Page 71, for all alignment points.

NOTE: At no time should the slug of coil L21 be adjusted; it was prealigned at the factory.

( ) Turn ON the SB-301 and the other receiver. Set the FUNCTION switch of the SB-301 to the CAL position. Turn the SB-301 AUDIO GAIN control fully counterclockwise.

( ) Tune the other receiver to WWV or a standard broadcast station as described above. Adjust ceramic trimmer capacitor C, on the RF circuit board, with an insulated screwdriver for a "zero beat" in the other receiver. When WWV is used, the period when no tone modulation is present allows easier identification of the zero beat. Zero beat is the point at which a harmonic of 100 kHz corresponds to the frequency of the station tuned in on the receiver. As zero beat is approached, a tone that decreases in frequency until it finally stops, will be heard from the receiver. Set the FUNCTION switch to OPR and then back to CAL to be sure you have a true zero beat.

HETERODYNE OSCILLATOR ADJUSTMENT

( ) Turn the FUNCTION switch to OPR.

( ) Connect a vacuum tube voltmeter with an 11 megohm input impedance between the chassis and test point A on the RF circuit board. Use the voltmeter 5 volt scale to read -DC.

Refer to the following chart and complete each step by adjusting the indicated coil for the indicated voltage. On one side of the voltage peak, the voltage will rise and drop in a slow linear fashion. Use this side of the slope. On the wrong side of the peak, the voltage will drop rapidly. The frequency of each coil is marked on the coil cover in the area designated HET OSC.

SWITCH POSITION	ADJUST COIL	DC VOLTS AT TEST POINT A
( ) 3.5 MHz	3.5	2.8 volts
( ) 7.0 MHz	7.0	2.7 volts
( ) 14.0 MHz	14.0	2.8 volts
( ) 15.0 MHz	15.0	2.9 volts
( ) 21.0 MHz	21.0	2.8 volts
( ) 28.0 MHz	28.0	2.4 volts
( ) 28.5 MHz	28.5	2.5 volts
( ) 29.0 MHz	29.0	2.4 volts
( ) 29.5 MHz	29.5	2.7 volts

Recheck the adjustment of each coil for proper voltage.

( ) Disconnect the vacuum tube voltmeter from the Receiver.

NOTE: There are two methods of alignment that can be used to align the IF, antenna, and RF amplifier sections of the Receiver. One is with the Crystal Calibrator and the other is with an RF signal generator. Select the alignment method desired, and perform the steps in that section.

ALIGNMENT WITH 100 kHz CRYSTAL CALIBRATOR

IF ALIGNMENT

The output of the crystal calibrator will be used as the signal source in this alignment procedure. In order to obtain this signal, place the FUNCTION switch in the CAL position; then tune the Main Tuning knob to one side of the zero beat, placing the signal in the center of the crystal filter passband as indicated by a maximum S-Meter reading.

( ) Set the Front Panel controls as follows:

PRESELECTOR - To the proper setting for the band being aligned. See Figure 2-2.
RF GAIN - Full clockwise.

BAND - 3.5 MHz.
AF GAIN - 3 o'clock.
AGC - FAST.
FUNCTION - CAL.
MODE - LSB.
Main Tuning - 3.5 MHz.
CONVERTER - HF.

( ) With the SB-301 set on one side of zero beat at 3.5 MHz, adjust IF transformers T3 and T4 for a maximum audio output or S-Meter reading.

( ) The Antenna and RF Amplifier Alignment can now be performed. Tune the Main Tuning to the side of zero beat that gives a maximum S-Meter indication at the frequencies noted in the SB-301 Receiver and Preselector or Generator Frequency column of the Chart.

ANTENNA AND RF AMPLIFIER ALIGNMENT

NOTE: It is very important that the PRESELECTOR be adjusted properly during the rest of the Alignment procedure. The proper PRESELECTOR knob settings for the various bands are shown in Figure 2-2 on Page 70.

( ) All front panel controls should be set as described for the previous adjustments. Be sure to turn the PRESELECTOR to the position indicated in Figure 2-2 for the band being aligned.

Complete each step as indicated in the following chart. Be sure to keep the signal generator level as low as possible while still obtaining a usable reading on the S-Meter.

NOTE: The Main Tuning knob must be tuned carefully to keep the signal in the center of the crystal filter's narrow passband. The center of the filter passband is indicated by a maximum S-Meter reading.

BAND SWITCH	RECEIVER AND PRESELECTOR OR GENERATOR FREQUENCY	ADJUST FOR MAXIMUM	SECTION BEING ADJUSTED
( ) 3.5 MHz	3.5 MHz	3.5	Antenna Coil
( ) *3.5 MHz	3.5 MHz	3.5	RF Amp Plate Coil
( ) 7.0 MHz	7.0 MHz	7.0	Antenna Coil
( ) 7.0 MHz	7.0 MHz	7.0	RF Amp Plate Coil
( ) 14.0 MHz	14.0 MHz	14.0	Antenna Coil
( ) 14.0 MHz	14.0 MHz	14.0	RF Amp Plate Coil
( ) 15.0 MHz	No Adjustment	No Adjustment	
( ) 21.0 MHz	21.0 MHz	21.0	Antenna Coil
( ) 21.0 MHz	21.0 MHz	21.0	RF Amp Plate Coil
( ) 29.0 MHz	29.0 MHz	28.0	Antenna Coil
( ) 29.0 MHz	29.0 MHz	28.0	RF Amp Plate Coil

No adjustments are made for the 28.0, 28.5, and 29.5 BAND switch positions.

*Upon completion of this step repeak transformers T3 and T4 to compensate for any error in the preceding IF Alignment.

This completes the IF, antenna, and RF alignment of the Receiver. Now perform the steps under LMO Shifter Adjustment and Dial Calibration.

LMO SHIFTER ADJUSTMENT

( ) Set the Main Tuning for 3.8 MHz.

( ) Turn the FUNCTION switch to CAL, and the MODE switch to USB. Carefully zero beat the calibrator signal, using the Main Tuning knob, and peak the PRESELECTOR.

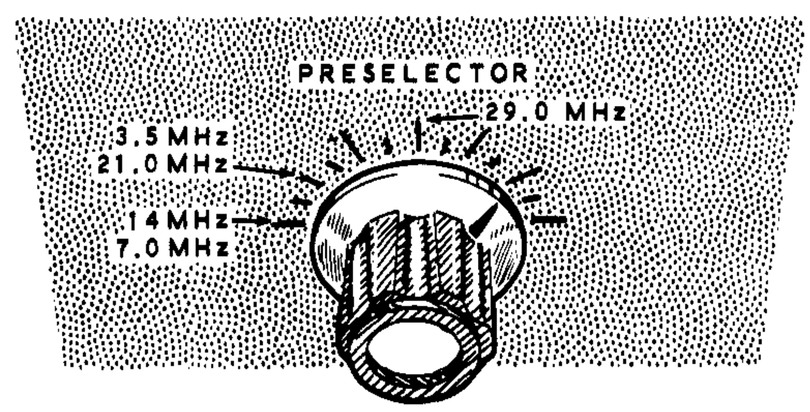

Figure 2-2

( ) Turn the MODE switch to the LSB position. Be careful not to touch the Main Tuning dial. Now note that the calibrate signal may or may not be exactly at zero beat in the LSB position. Turn the FREQUENCY SHIFT adjustment (on the LMO) for an exact zero beat in the LSB mode. Recheck the zero beat in the USB mode to be certain of the adjustment. Repeat the procedure if necessary.

DIAL CALIBRATION

( ) Zero beat the crystal calibrator at 3.8 MHz.

( ) Set the zero set marking in the center of the circular dial window.

( ) Remove the knob from the Main Tuning shaft without disturbing the zero beat.

( ) Place a screwdriver through the hole in the dial escutcheon directly above the Main Tuning shaft and into the LMO dial drive shaft.

( ) Hold the LMO drive shaft on zero beat and loosen the setscrew in the circular dial bushing. Turn the circular dial until the 0 is directly under the marking on the zero set dial. Now tighten the setscrew.

( ) Make sure that the circular dial turns freely and that the spiral drive pawl is properly engaged in the spiral before proceeding.

( ) Replace the knob on the Main Tuning shaft.

( ) Readjust the Heterodyne Oscillator coils for a maximum S-Meter reading. Be sure to adjust the coil on the side of the peak with the slow rise and fall of voltage.

( ) Change the BAND switch and Main Tuning to 15 MHz.

( ) Zero beat the calibrator with WWV by adjusting the crystal calibrator trimmer (capacitor C).

This completes the Alignment of your Heathkit SSB Receiver.

OPTIONAL ALIGNMENT USING A SIGNAL GENERATOR

IF TRANSFORMER ALIGNMENT

( ) Set the front panel controls as follows:

PRESELECTOR - Any place.
RF GAIN - Full clockwise.
BAND - 3.5 MHz.
AF GAIN - 3 o'clock.
AGC - FAST.
FUNCTION - OFF.
MODE - LSB.
Main Tuning - 4.0 MHz.
CONVERTER - HF.

( ) Turn the FUNCTION switch to the OPR position and allow the tubes to warm up.

( ) Connect the RF output of the signal generator through a .01 μfd or .001 μfd disc capacitor to lug 1 of tube socket V6. Use a 1 millivolt signal level. Set the generator for a 3.395 MHz unmodulated signal.

( ) Adjust IF transformers T3 and T4 for maximum S-Meter reading. Alternate from T3 to T4 until no further increase can be noticed in the S-Meter reading.

( ) Turn the Receiver off and disconnect the signal generator.

ANTENNA AND RF AMPLIFIER ALIGNMENT

( ) Connect the RF output of the signal generator to the HF ANTENNA jack on the rear of the Receiver.

( ) Complete the steps for Antenna and RF Amplifier Alignment starting on Page 69.

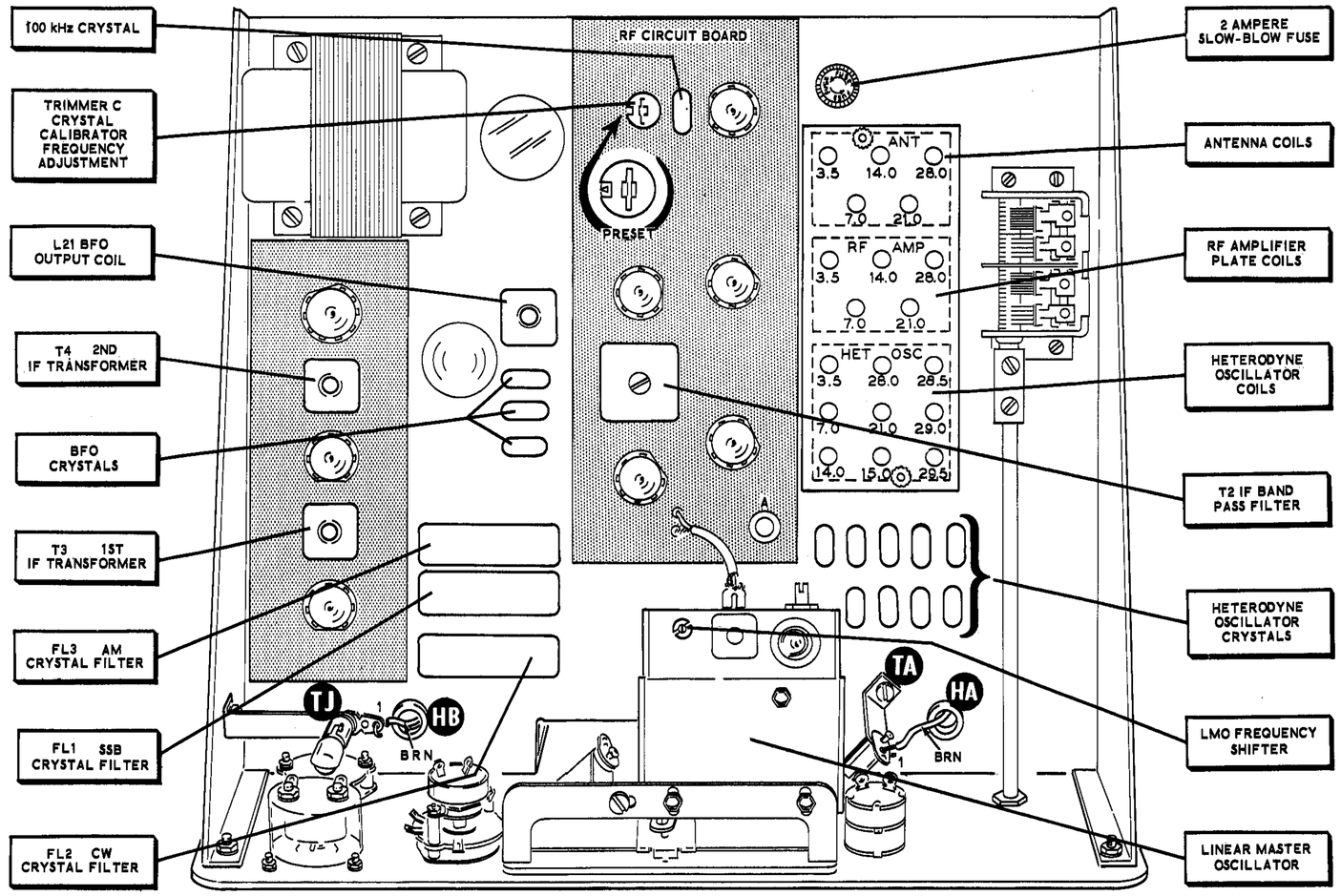
100 kHz CRYSTAL
TRIMMER C CRYSTAL CALIBRATOR FREQUENCY ADJUSTMENT
L21 BFO OUTPUT COIL
T4 2ND IF TRANSFORMER
BFO CRYSTALS
T3 1ST IF TRANSFORMER
FL3 AM CRYSTAL FILTER
FL1 SSB CRYSTAL FILTER
FL2 CW CRYSTAL FILTER
RF CIRCUIT BOARD
PRESET
2 AMPERE SLOW-BLOW FUSE
ANTENNA COILS
RF AMPLIFIER PLATE COILS
HETERODYNE OSCILLATOR COILS
T2 IF BAND PASS FILTER
HETERODYNE OSCILLATOR CRYSTALS
LMO FREQUENCY SHIFTER
LINEAR MASTER OSCILLATOR
ANT
3.5 14.0 28.0
7.0 21.0
RF AMP
3.5 14.0 28.0
7.0 21.0
HET OSC
3.5 28.0 28.5
7.0 21.0 29.0
14.0 15.0 29.5
TJ
HB
TA
HA
BRN
BRN

FIGURE 2-1

FINAL ASSEMBLY

Refer to Figure 3-1 for the following steps.

( ) Slide the Receiver into the cabinet from the front. Be sure the cabinet is right-side up.

( ) Turn the Receiver and cabinet over and mount a rubber foot on each rear corner. Use 6-32 x 5/8" screws, with #6 flat washers. Fasten the screws into the tapped holes on the bottom of the chassis. If you do not wish to have the Receiver set at an angle, mount two rubber feet on the front of the Receiver in the same manner. For angle positioning of the Receiver, see the next two steps.

( ) Place a #6 flat washer in one of the remaining rubber feet. Place a 6-32 x 1-1/2" screw through the foot. Now slip a foot spacer over the screw with the wide end up. Screw the 6-32 screw into the bottom of the cabinet at either front corner.

( ) Similarly, mount the other rubber foot and foot spacer at the other front corner of the cabinet.

( ) Peel the protective backing from the blue and white label. Press this label firmly on the chassis at the location shown.

( ) Install the 8-32 x 1/4" oval head screws in the cabinet as shown to secure the cabinet top cover. Then close the top and tighten the screws.

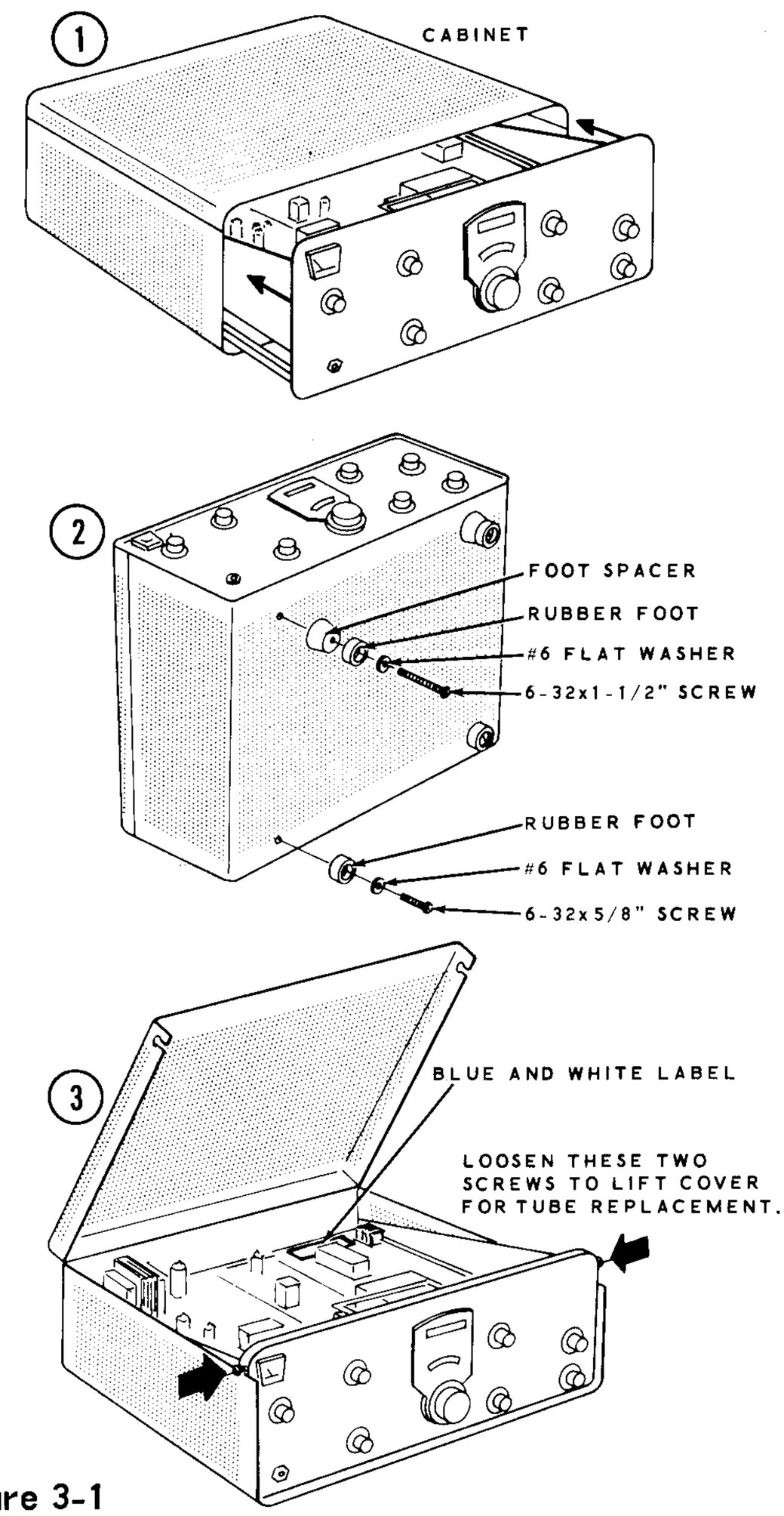

Figure 3-1

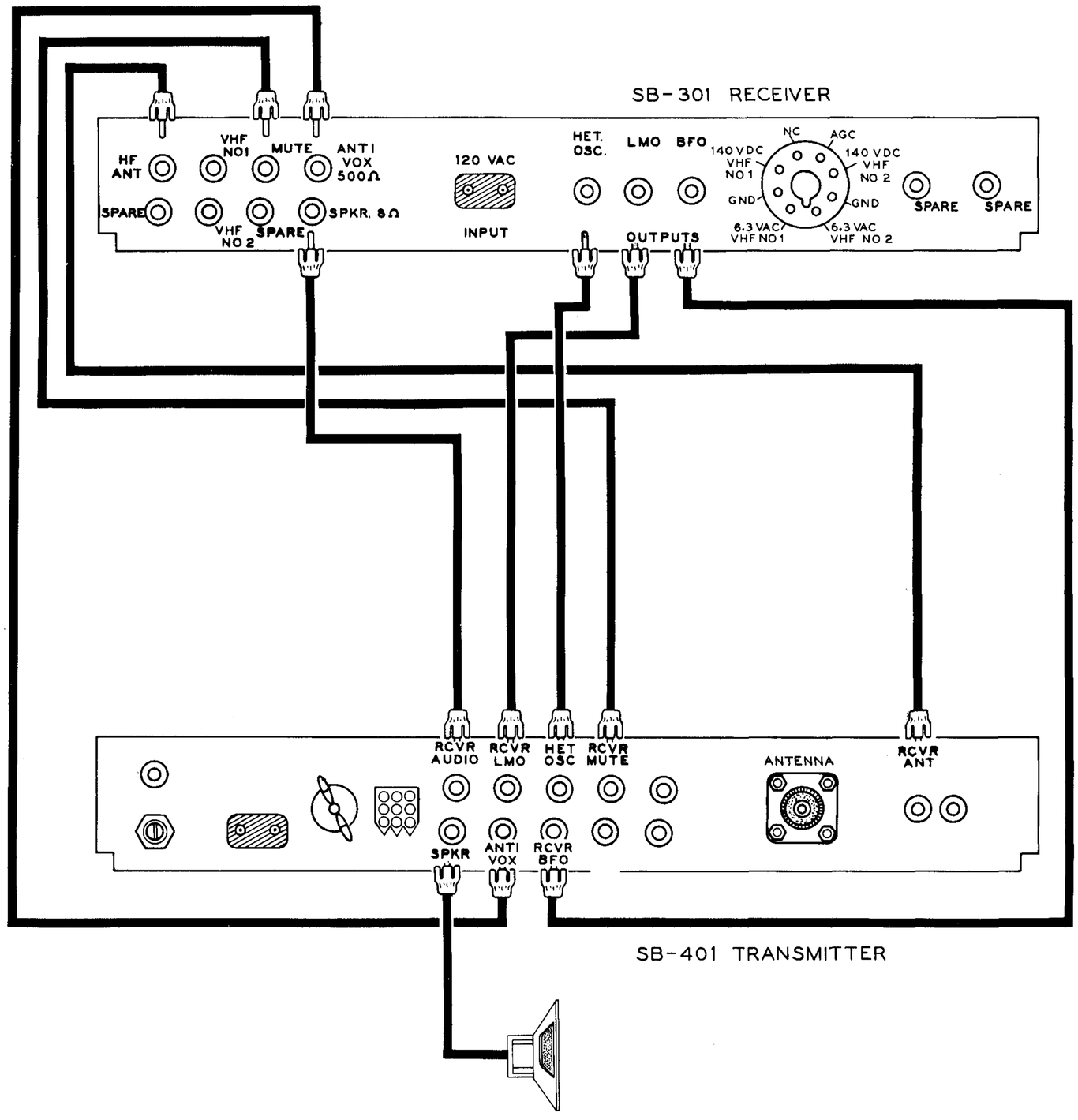
SB-301 RECEIVER
HF ANT
VHF NO1
MUTE
ANTI VOX 500Ω
SPARE
VHF NO2
SPARE
SPKR. 8Ω
120 VAC
INPUT
HET. OSC.
LMO
BFO
OUTPUTS
NC
AGC
140 VDC VHF NO 1
140 VDC VHF NO 2
GND
GND
6.3 VAC VHF NO1
6.3 VAC VHF NO 2
SPARE
SPARE
RCVR AUDIO
RCVR LMO
HET OSC
RCVR MUTE
ANTENNA
RCVR ANT
SPKR
ANTI VOX
RCVR BFO
SB-401 TRANSMITTER

FIGURE 4-1

INSTALLATION

Refer to Figures 4-1 (fold-out from Page 72), 4-2 (fold-out from this page), and 4-3 (fold-out from Page 74) for examples of station hookups using the SB-301 Receiver. Although the Receiver operates well over a considerable range of temperatures, it operates best if placed where adequate air circulation is present.

The cables for LMO, BFO, and Heterodyne Oscillator output jacks, for transceive operation, must be cut to exactly 24" from the RG-62/U (large) coaxial cable supplied with the kit. They should be made up at this time and stored for future use. Refer to Figure 4-4 to install phono plugs on the cables.

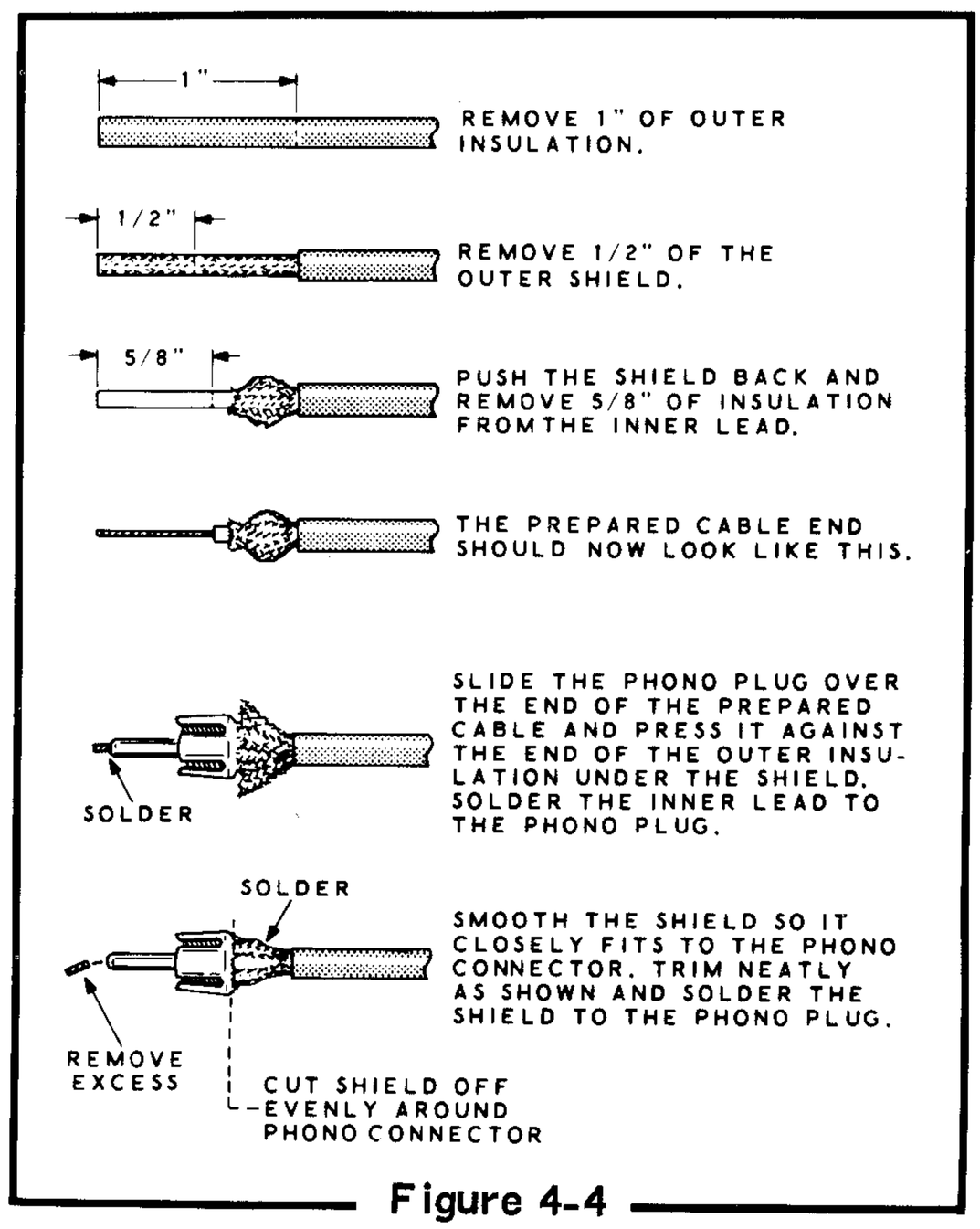

Figure 4-4

REAR APRON CONNECTIONS

HF ANTENNA - The antenna input circuit is designed to accept a 50 Ω unbalanced antenna. The receiving antenna for signals in the 3.5 to 30 MHz amateur bands should be connected to this socket.

VHF NO 1 AND NO 2 ANTENNA - When a VHF converter is used, its 28 MHz output is connected to either of these input sockets. Either socket is switch selected by the Converter switch at the rear of the chassis. This switch may also be used as a receiver antenna switch for the selection of different antennas on different bands.

MUTE - The muting line is connected to the VOX control relay in the transmitter. Tubes V1, V2, V6, V7, and V10B are muted by ungrounding this signal when the VOX relay is open, during transmit times. Receiver operation is obtained with the FUNCTION switch in STBY, when the muting cable is grounded by the VOX relay. In OPERATE, the muting line is grounded by the FUNCTION switch.

ANTI-VOX-500 Ω - The anti-vox is connected into the anti-vox jack on the transmitter to prevent the Receiver audio from tripping the transmitter VOX.

SPEAKER - The speaker socket is for the connection of an 8 Ω speaker.

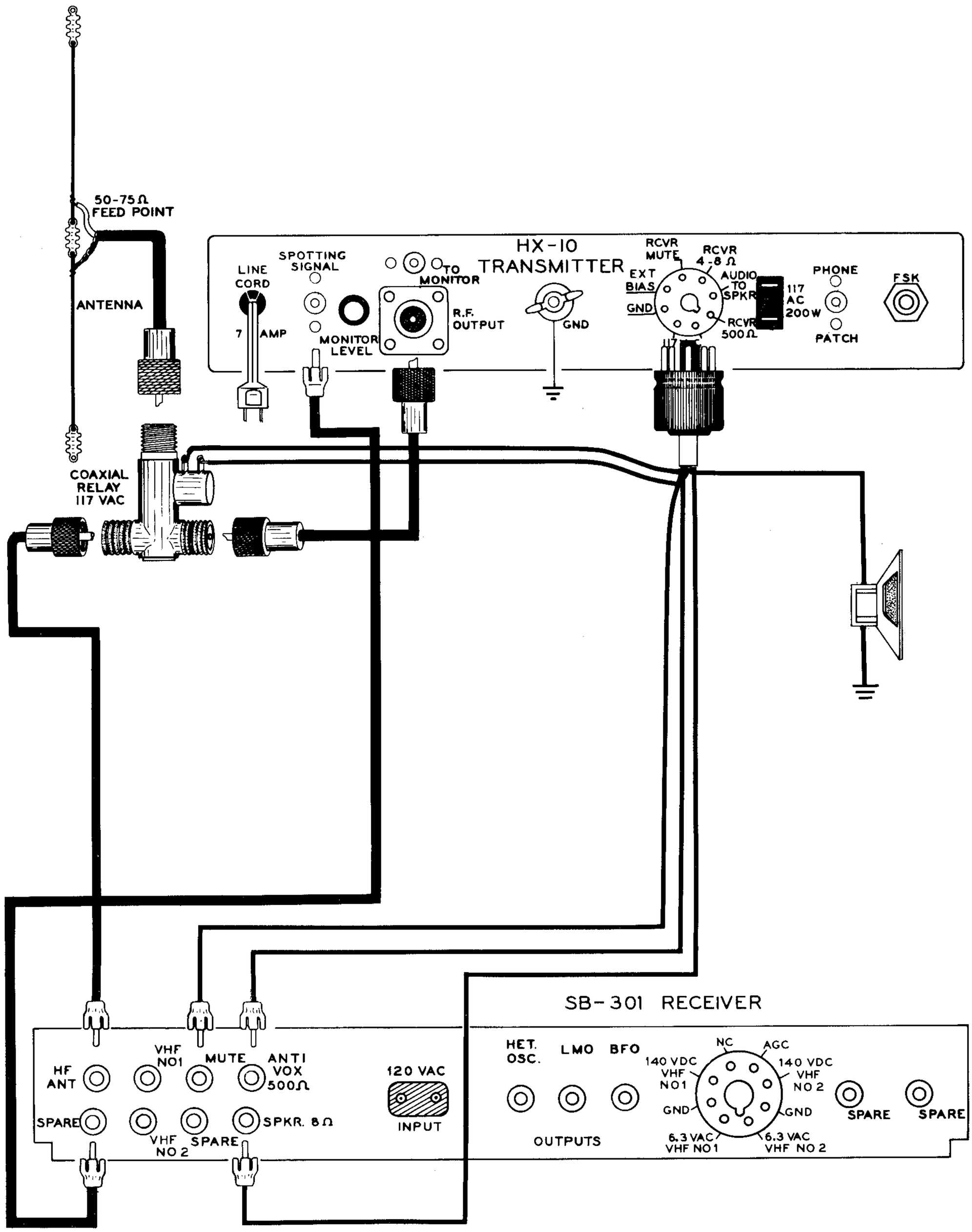
50-75Ω
FEED POINT
ANTENNA
COAXIAL
RELAY
117 VAC
HX-10
TRANSMITTER
LINE
CORD
7 AMP
SPOTTING
SIGNAL
MONITOR
LEVEL
TO
MONITOR
R.F.
OUTPUT
GND
RCVR
MUTE
RCVR
4-8 Ω
EXT
BIAS
GND
AUDIO
TO
SPKR
RCVR
500Ω
117
AC
200W
PHONE
PATCH
FSK
SB-301 RECEIVER
HF
ANT
VHF
NO1
MUTE
ANTI
VOX
500Ω
SPARE
VHF
NO 2
SPARE
SPKR. 8Ω
120 VAC
INPUT
HET.
OSC.
LMO
BFO
OUTPUTS
NC
AGC
140 VDC
VHF
NO1
140 VDC
VHF
NO 2
GND
GND
6.3 VAC
VHF NO1
6.3 VAC
VHF NO 2
SPARE
SPARE

FIGURE 4-2

LMO OUTPUT - The LMO operating frequency is present at this socket for connection to the SB-401 companion transmitter for transceive operation. Use the RG-62/U coaxial cable supplied.

HETERODYNE OSCILLATOR - The heterodyne oscillator operating frequency is available at this socket for connection to the SB-401 companion transmitter for transceive operation. Use the RG-62/U coaxial cable supplied.

BFO - The BFO output signal is present at this socket for connection to the SB-401 companion transmitter for transceive operation. Use the RG-62/U coaxial cable supplied.

CONVERTER SOCKET - B+ and filament voltages are present at this socket for operation with a VHF converter. These voltages are applied to the appropriate converter by the CONVERTER switch. An AGC voltage is also available for connection to converters for gain control.

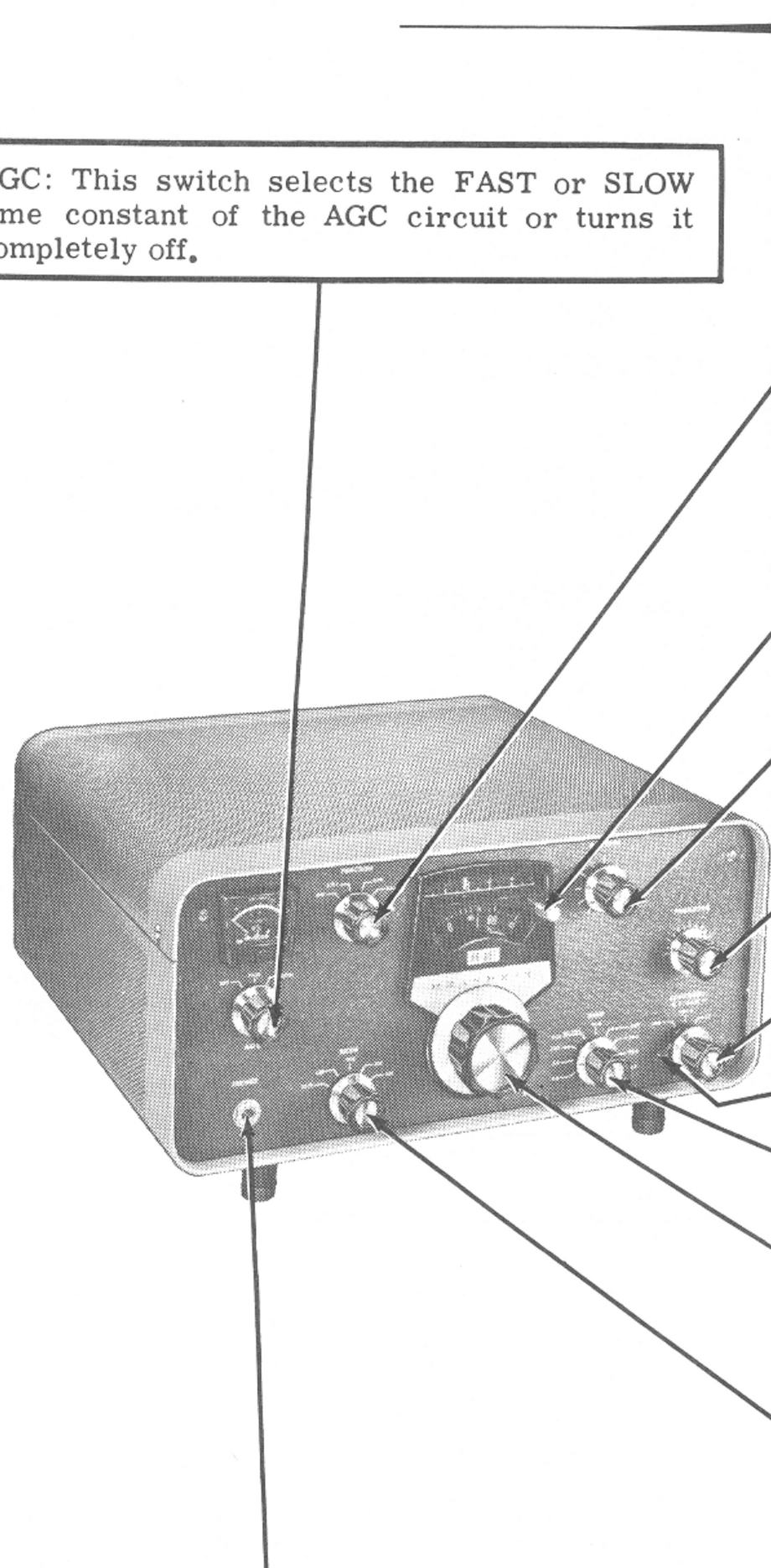

AGC: This switch selects the FAST or SLOW time constant of the AGC circuit or turns it completely off.

FUNCTION: This switch turns the Receiver on or OFF, disables the Receiver during transmit, and turns on the crystal calibrator for dial calibration at the 100 kHz points.

ZERO SET: Adjusts the position of the zero set line.

AF GAIN: Controls the audio output of the Receiver. It is adjusted to a desired listening level.

ANL: Pull for on.

PRESELECTOR: This control peaks the RF amplifier section of the Receiver and must be readjusted for each position of the BAND switch.

CONVERTER: Switches to the proper antenna jack for VHF #1, VHF #2, or HF operation.

RF GAIN: Controls the sensitivity of the receiver. Most applications require that the RF GAIN control be at full clockwise rotation except for strong CW or SSB signals.

BAND: Selects the WWV position or one of five amateur bands. Ten meter band divided into four segments.

MAIN TUNING: This control tunes the band selected by the BAND switch.

MODE: This switch selects the desired type of detection and filter for the different modes of operation; SSB, CW, AM, and RTTY. Only the SSB filter is normally supplied with the Receiver; the CW and AM switch positions are not used unless the accessory crystal filters are installed. In the RTTY, USB, LSB, and CW positions, the BFO operates continually.

PHONE JACK: High Impedance earphones can be connected to this jack. The speaker is automatically cut out when the earphone jack is inserted.

Figure 5-1

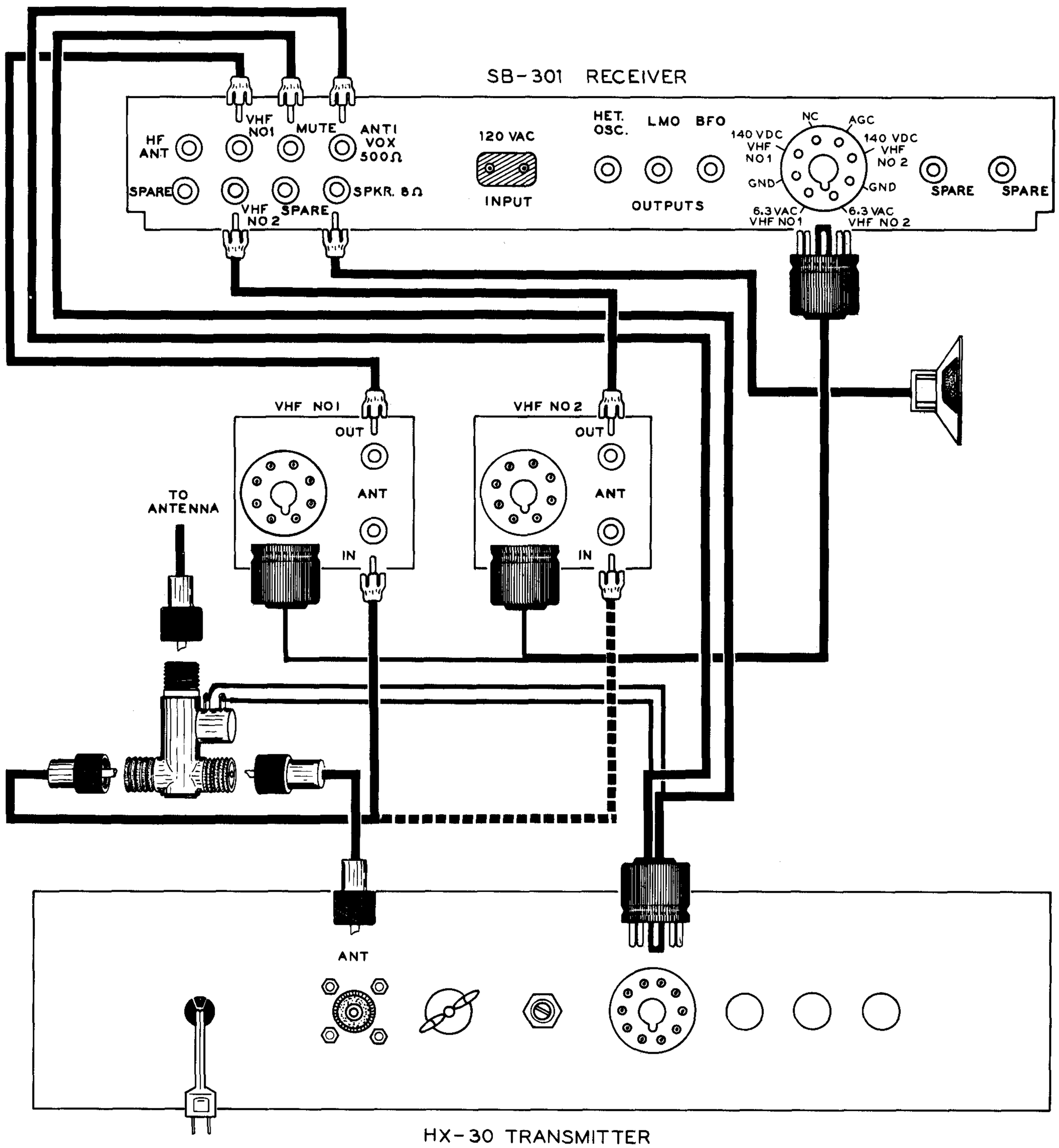
SB-301 RECEIVER
VHF NO1
MUTE
ANTI VOX 500Ω
HF ANT
SPARE
VHF NO2
SPARE
SPKR. 8Ω
120 VAC
INPUT
HET. OSC.
LMO
BFO
OUTPUTS
NC
AGC
140 VDC VHF NO1
140 VDC VHF NO2
GND
GND
6.3 VAC VHF NO1
6.3 VAC VHF NO2
SPARE
SPARE
VHF NO1
OUT
ANT
IN
VHF NO2
OUT
ANT
IN
TO ANTENNA
ANT
HX-30 TRANSMITTER

FIGURE 4-3

OPERATION

Refer to Figure 5-1 for a complete explanation of each front panel control. The Operation section will be broken into three separate sections: Single Sideband Tuning, RTTY Tuning, AM Tuning, and CW Tuning.

SINGLE SIDEBAND TUNING

1. Place the front panel controls as follows:

   RF GAIN - Full clockwise.
   BAND - Desired Band.
   AF GAIN - 10 o'clock.
   MODE - USB or LSB as desired.
   AGC - SLOW.
   FUNCTION - CAL.
   Main Tuning - Desired frequency.

2. Zero beat the calibrator signal at the calibration point nearest the desired signal frequency. Turn the Zero Set knob until the zero set line is directly over the zero on the circular dial. Turn the FUNCTION switch to OPR. (This is done to compensate for any heterodyne oscillator crystal frequency variation from the exact frequency marked on the crystal.)

3. Peak the PRESELECTOR for maximum audio or S-Meter reading.

4. Tune in a single sideband signal and adjust the AF GAIN control for the desired audio output level.

RTTY TUNING

Set the front panel controls the same as for Single Sideband Tuning, except that the MODE switch should be in the RTTY position.

1. Peak the PRESELECTOR for maximum audio or S-Meter reading.

2. Adjust the AF GAIN control for satisfactory audio input to the terminal unit.

3. Tune across the desired signal until both audio signals are balanced at the input of the terminal unit.

AM TUNING

Set the front panel controls the same as for Single Sideband Tuning except place the AGC switch in the FAST position and, if an AM crystal filter was installed in your receiver, turn the MODE switch to AM. Otherwise, leave the MODE switch in the USB or LSB position.

1. Adjust the AF GAIN control for the desired audio output level.

2. Peak the PRESELECTOR for maximum audio or S-Meter reading.

3. Tune in an AM signal and adjust the AF GAIN control for the desired audio output level. NOTE: If you are using the single sideband filter, you will hear a heterodyne beat note on the AM signal. Zero beat this note to obtain satisfactory AM signal reception.

CW TUNING

1. Set the front panel controls as described under Single Sideband Tuning except place the MODE switch in the CW position, if the CW crystal filter was installed in your receiver. If not, leave the MODE switch in the USB or LSB position.

If the CW filter is used, the bandpass of the Receiver is so narrow that the zero beat cannot be heard. When the CW signal is centered in the filter passband, an audio signal of 1000 Hz will be heard. It is suggested the CW signal be located in the USB mode and tuned for an audio note of 1000 Hz. Now switch to the CW mode for single signal reception and elimination of interference.

For extremely weak signals, the OFF or FAST setting of the AGC switch may be better than the SLOW position. Do not operate the Receiver by leaving the AF GAIN control at maximum and adjusting volume with the RF GAIN control or you will degrade the signal-to-noise performance of the Receiver.

ANL (NOISE LIMITER)

The noise limiter is most effective when used on weak signals. If used on strong signals, where noise is usually not a problem, severe clipping and distortion will result. The noise limiter is activiated by pulling out on the AF GAIN control knob.

This Receiver can be used with the Heathkit SB-400 or SB-401 Transmitters for transceive operation. Transceive operation is discussed in the SB-400 and SB-401 Manuals.

IN CASE OF DIFFICULTY

NOTE: At no time should the LMO be opened or the Warranty will be voided. The LMO was aligned using the tube supplied. Changing this tube may cause some slight difference in calibration. Replace the tube with one of the same brand if replacement is necessary.

Refer to the photographs and X-Ray views at the rear of the Manual for the location of the components on the circuit boards and chassis.

1. Recheck the wiring. Trace each lead in colored pencil on the Pictorial as it is checked. It is frequently helpful to have a friend check your work. Someone who is not familiar with the unit may notice something consistently overlooked by the builder.

2. About 90% of the kits that are returned for repair do not function properly due to poor connections and soldering. Therefore, many troubles can be eliminated by reheating all connections to make sure that they are soldered as described in the Proper Soldering Techniques section of the Kit Builders Guide.

3. Check to be sure that all tubes are in their proper locations. Make sure that all tubes light up properly.

4. Check the tubes with a tube tester or by substitution of tubes of the same types that are known to be good.

5. Check the values of the parts. Be sure that the proper part has been wired into the circuit, as shown in the pictorial diagrams and as called out in the wiring instructions.

6. Check for bits of solder, wire ends, or other foreign matter which may be lodged in the wiring, and for solder bridges across foils of the circuit boards.

7. Check for short circuits between the shields and inner leads of coaxial cables.

8. If, after careful checks, the trouble is still not located and a voltmeter is available, check voltage and resistance readings against those shown in Figures 5-2 and 5-3. NOTE: All voltage readings were taken with an 11 megohm input vacuum tube voltmeter. Voltages may vary as much as 10%.

9. A review of the Circuit Description may help you locate the trouble.

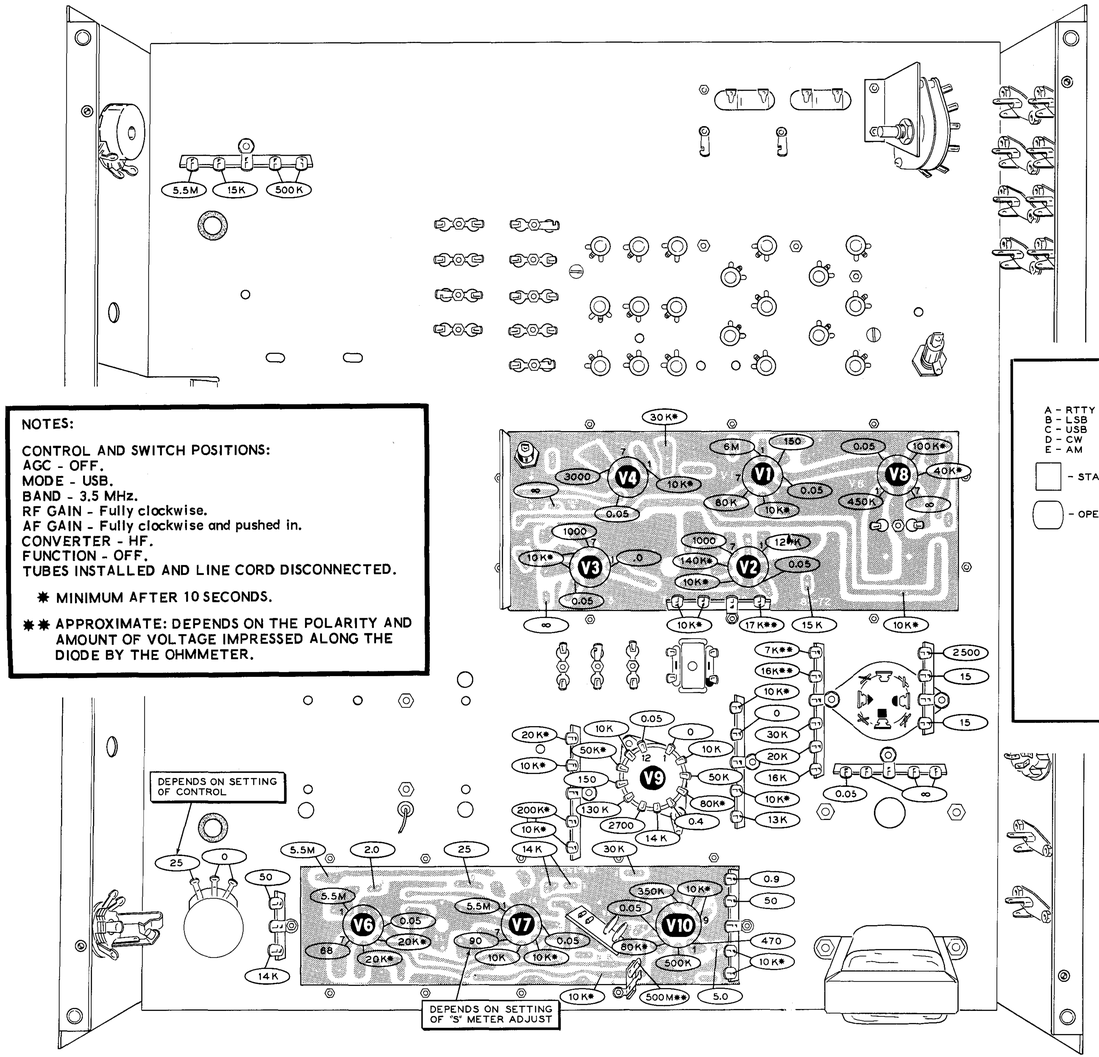

NOTES:

CONTROL AND SWITCH POSITIONS:
AGC - OFF.
MODE - USB.
BAND - 3.5 MHz.
RF GAIN - Fully clockwise.
AF GAIN - Fully clockwise and pushed in.
CONVERTER - HF.
FUNCTION - OFF.
TUBES INSTALLED AND LINE CORD DISCONNECTED.

✱ MINIMUM AFTER 10 SECONDS.

✱✱ APPROXIMATE: DEPENDS ON THE POLARITY AND AMOUNT OF VOLTAGE IMPRESSED ALONG THE DIODE BY THE OHMMETER.

FIGURE 5-2

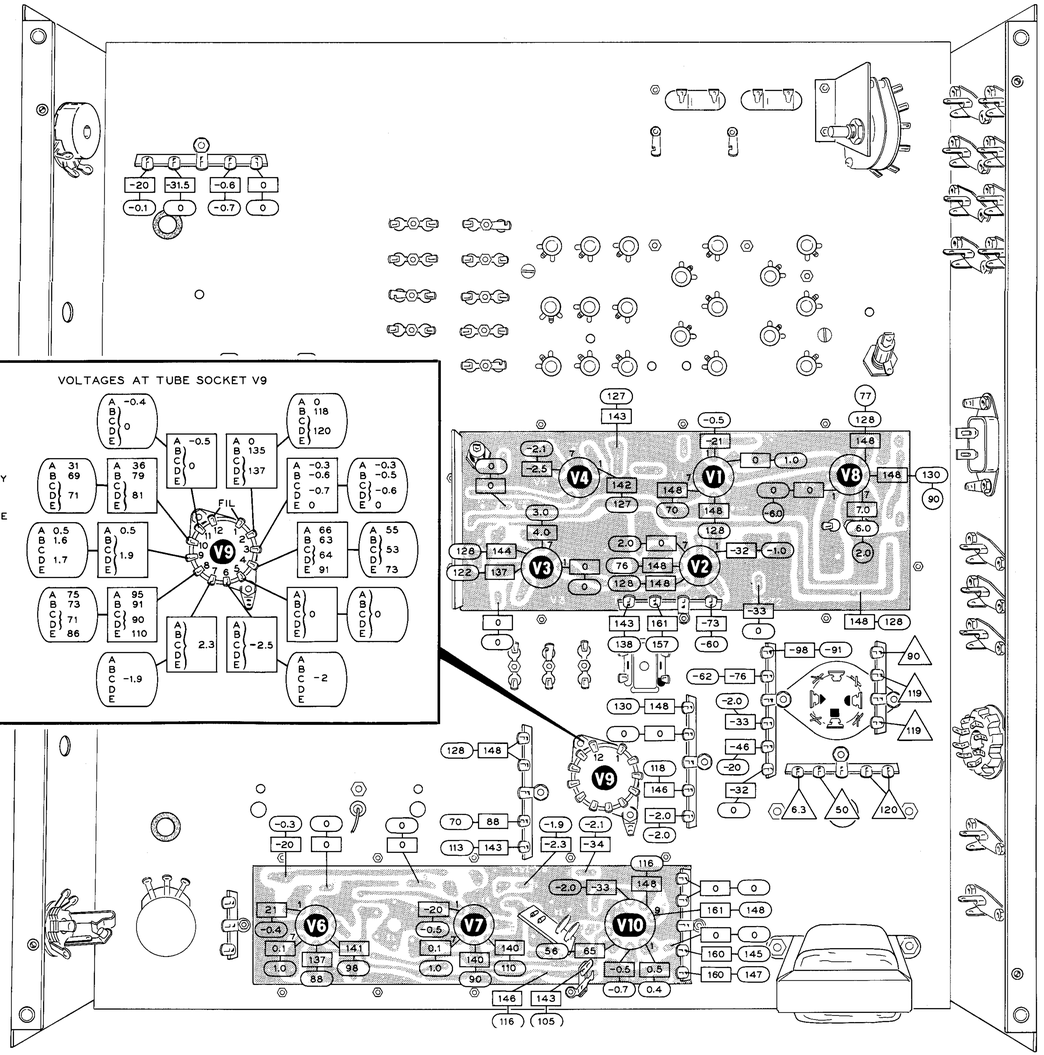

FIGURE 5-3

NOTES FOR DC AND AC VOLTAGES

1. CONTROLS AND SWITCH POSITIONS:

   AGC - OFF.
   MODE - USB.
   BAND - 3.5 MHz.
   RF GAIN - Fully clockwise.
   AF GAIN - Fully clockwise and pushed in.
   PRESELECTOR - Peaked.
   CONVERTER - HF.

   ▭ FUNCTION - STANDBY.

   ⬭ FUNCTION - OPERATE.

   ○ FUNCTION - CALIBRATE.

   △ AC VOLTAGES.

2. ALL VOLTAGES ARE MEASURED FROM POINT INDICATED TO CHASSIS GROUND WITH AN 11 MEGOHM INPUT VTVM. VOLTAGES MAY VARY ±20%.

3. ALL VOLTAGES ARE POSITIVE UNLESS MARKED OTHERWISE.

NOTES FOR RF VOLTAGES

1. CONTROL AND SWITCH POSITIONS: SAME AS FOR DC AND AC VOLTAGES.

2. AUDIO OUTPUT - TERMINATED WITH AN 8 Ω RESISTIVE LOAD.

3. ALL MEASUREMENTS ARE FOR A POWER OUTPUT OF 1/2 WATT $\left(P = \frac{E^2}{R}\right)$

GENERATOR TERMINATION

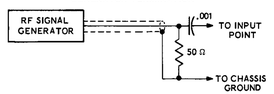

INPUT POINT	GENERATOR FREQUENCY	INPUT LEVEL
PIN 6 V9	3395 kHz	30 MV
PIN 1 V7	"	17 MV
PIN 1 V6	"	250 μV
PIN 1 V3	8.5 MHz	200 μV
PIN 1 V2	3.5 MHz	200 μV
PIN 1 V1	"	9 μV
HF ANTENNA SOCKET	"	1.3 μV
GENERATOR CONNECTED DIRECT WITH NO TERMINATION.		

TROUBLESHOOTING CHART

NOTE: Refer to the Chassis Photographs (fold-out from Page 78), the Circuit Board X-Ray Views (on Page 92), and the Schematic Diagram (fold-out from Page 95), for the locations of resistors and capacitors on the Circuit Boards and chassis, by R and C numbers.

SYMPTOM	POSSIBLE CAUSE
Pilot lamps and/or tube filaments do not light.	1. Open fuse in AC line. 2. Function switch incorrectly wired. 3. Terminal strip N, lug 1, incorrectly wired to wiring harness or power transformer. 4. Brown leads to circuit boards, V5, and V9 not connected properly.
No audio output at speaker.	1. Speaker not connected to 8 Ω speaker socket. 2. Orange coaxial cable shorted or not internally wired to 8 Ω speaker socket. 3. Orange coaxial cable grounded between 8 Ω speaker socket and lug 4 of phono jack FG. 4. Audio transformer incorrectly wired to terminal strip S, or to B+ and lug 9 of V10. 5. Bad tube at V10. 6. Cathode resistor R115 open or omitted. 7. AF Gain control incorrectly wired. 8. Yellow coaxial cable from lug 2 of V10 to lug 3 of AF Gain control shorted. 9. Coupling capacitor C121 omitted. 10. Mode switch MS4R incorrectly wired. 11. BFO (V9B) inoperative. 12. No B+ at lug 4 of V9. 13. Y10, Y11, or Y12 defective. 14. Product detector (V9A) inoperative. 15. No B+ at lug 8 of V9. 16. Capacitor C118 omitted.
No IF output.	1. Bad tube at V6 or V7. 2. No voltage at lugs 5 and 6 of V6 or V7. 3. Open cathode resistors at V6 or V7. 4. T3 and T4 not peaked at 3395 kHz. 5. C118 omitted (for product detection only). 6. C117 omitted (for AM detection only).

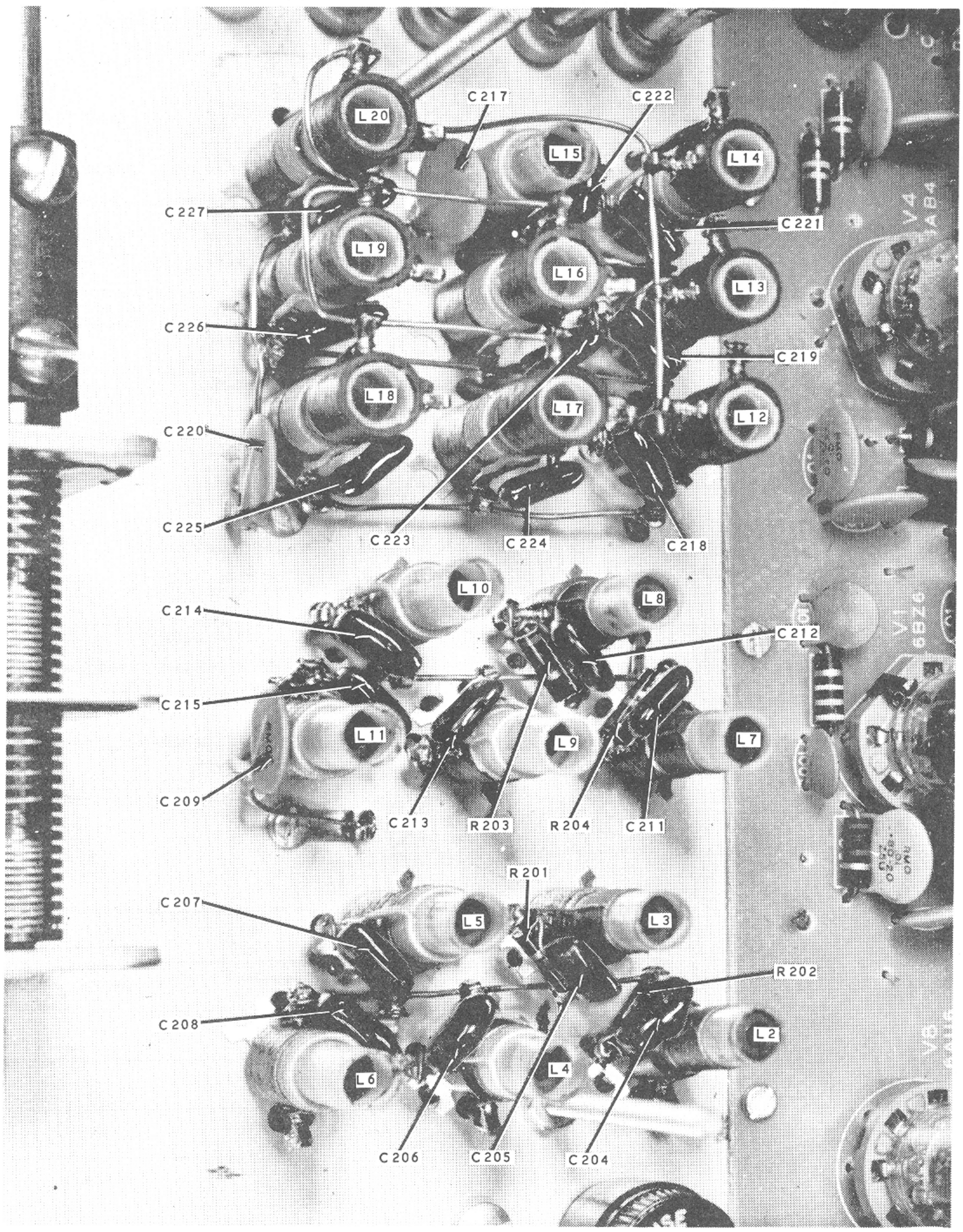

CHASSIS PHOTOGRAPHS

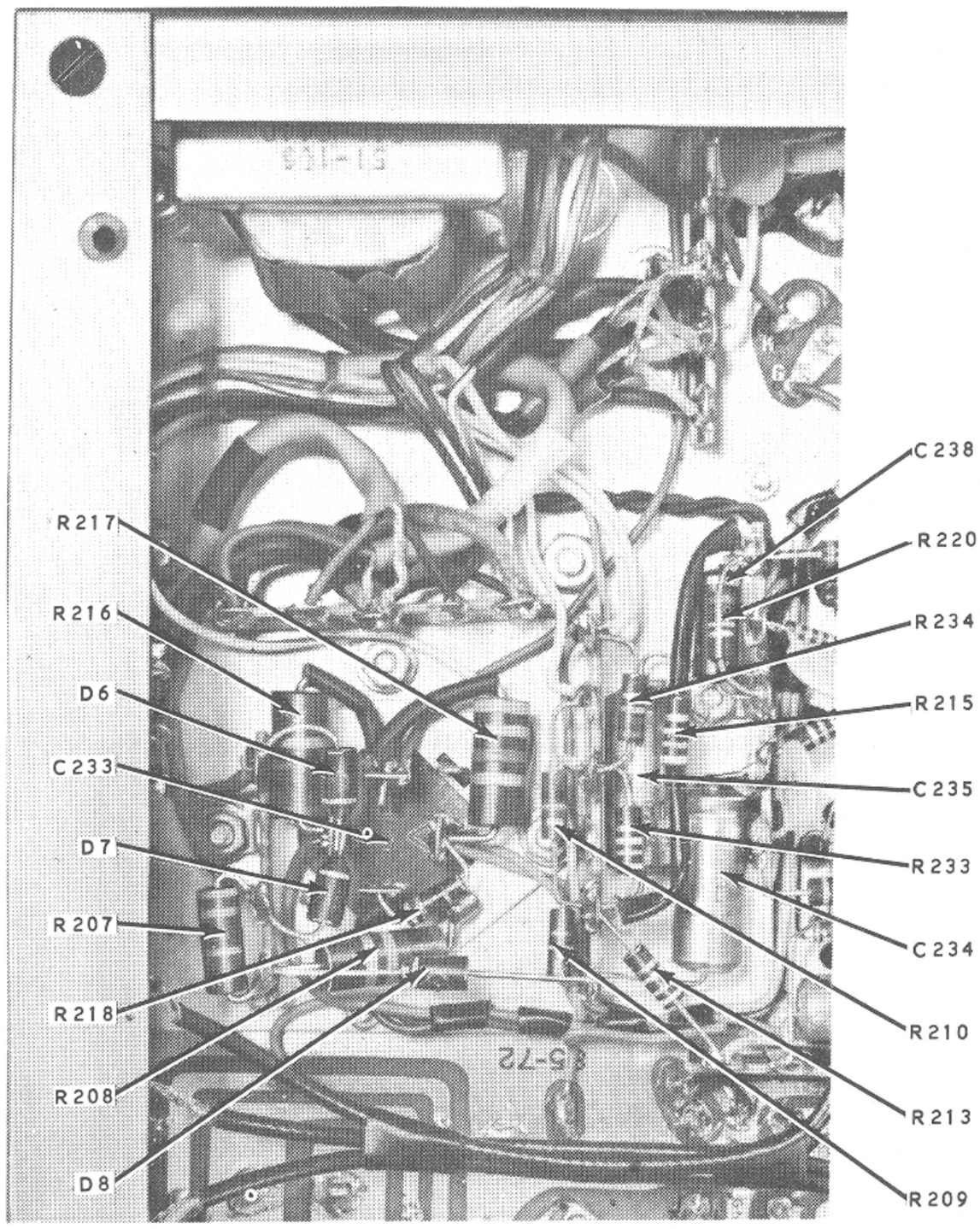

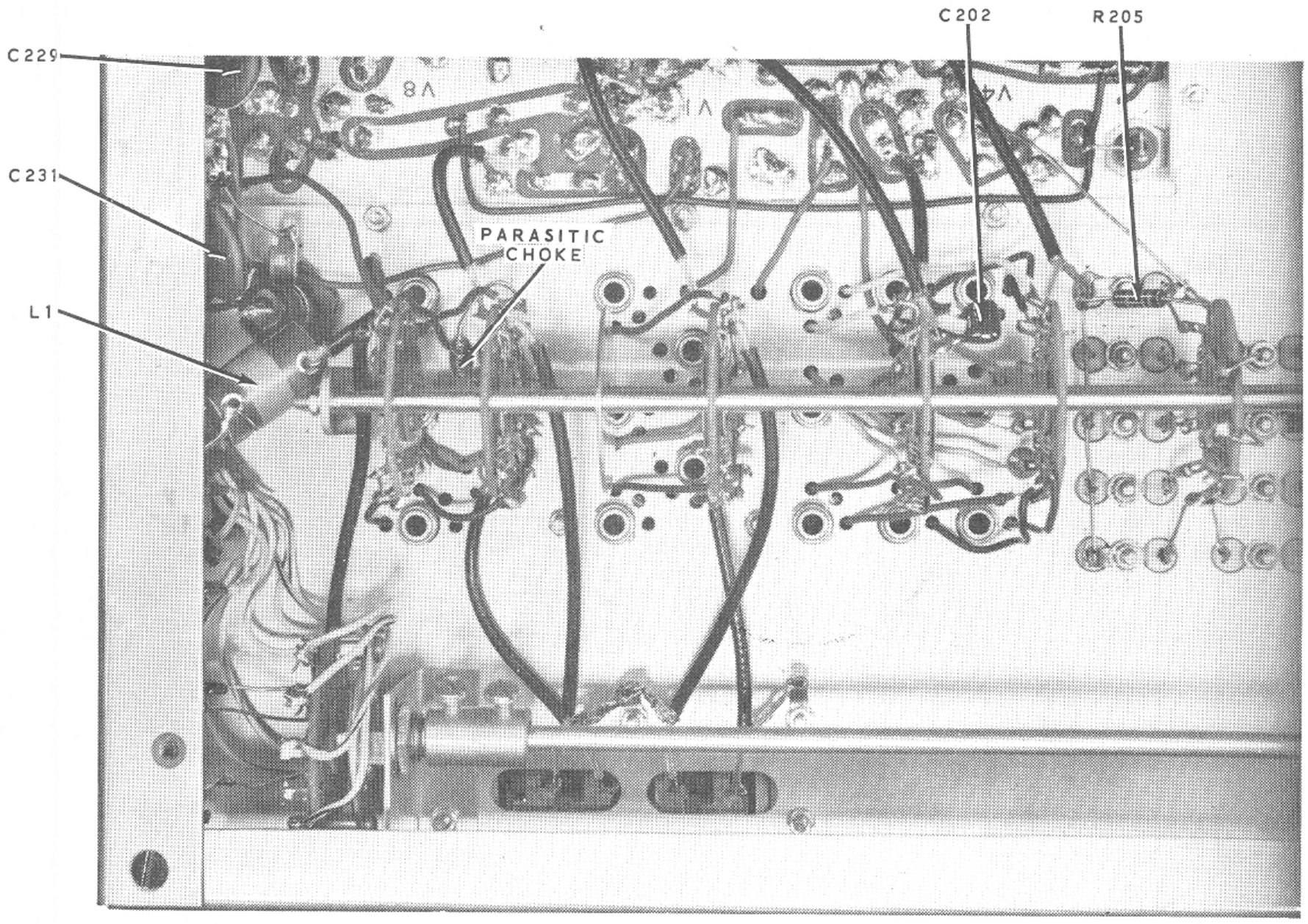

CHASSIS PHOTOGRAPHS

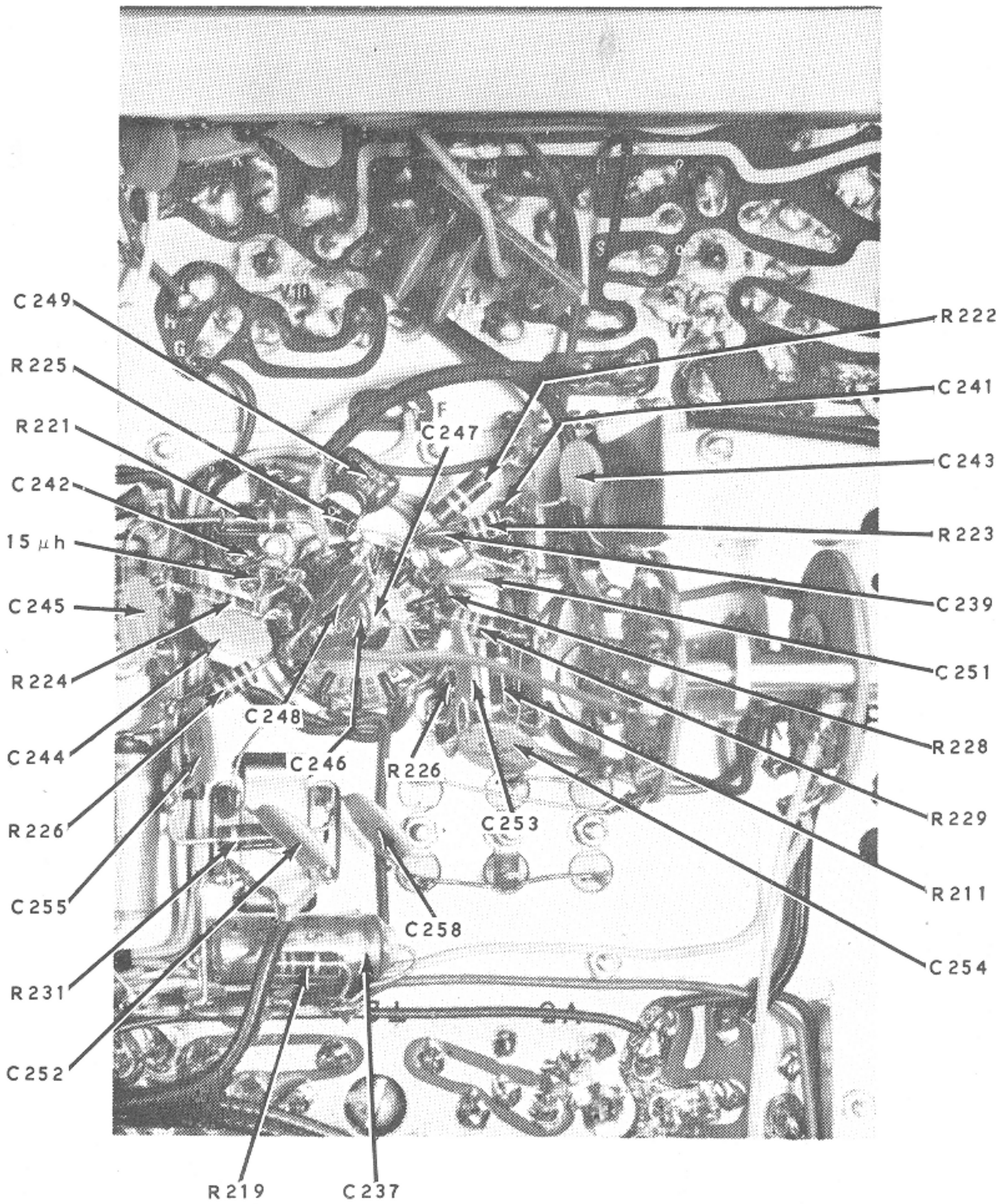

CHASSIS PHOTOGRAPHS

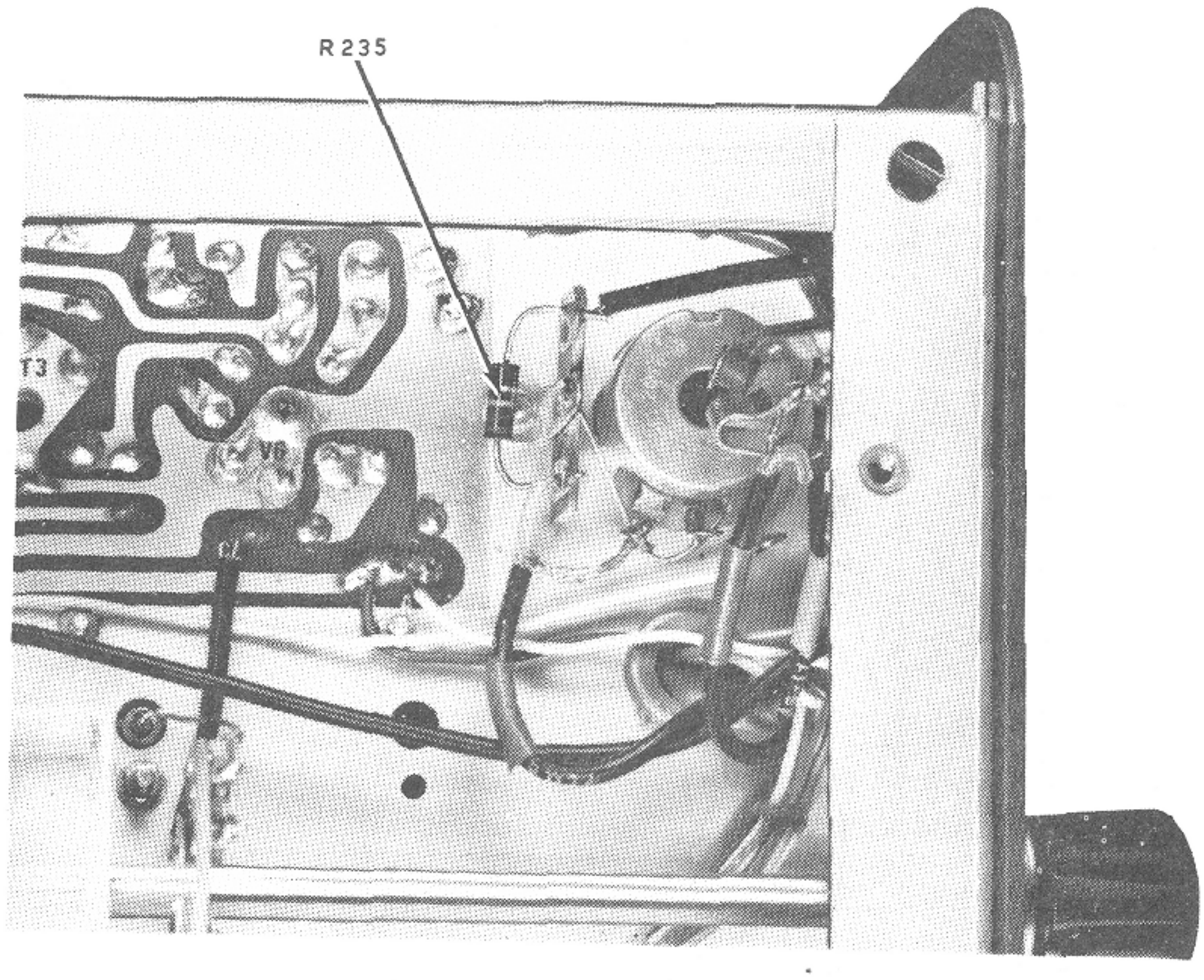

CHASSIS PHOTOGRAPHS

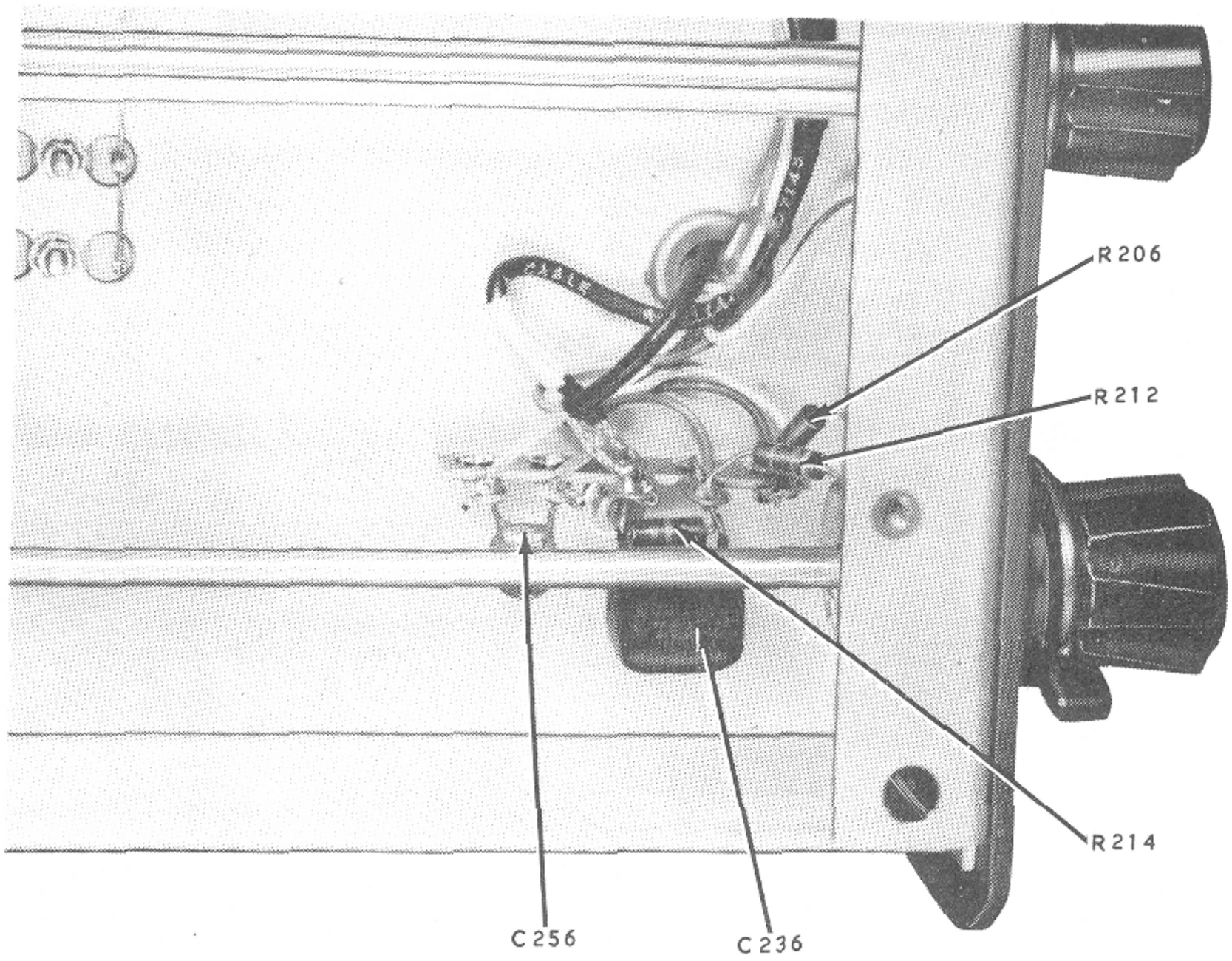

SYMPTOM	POSSIBLE CAUSE
AGC inoperative.	1. C114 omitted. 2. Defective diodes at D3 and D4. 3. Diode D1 or D2 installed backwards. 3. C113 and/or R112 defective or incorrectly wired to AGC switch. 4. IF amplifiers V6 and V7 incorrectly wired to AGC switch. 5. Bad tubes at V6 and V7. 6. AGC switch in OFF position.
S-Meter does not zero.	1. RF Gain control not fully clockwise. 2. Meter incorrectly wired in circuit. 3. S-Meter Adjust control incorrectly wired. 4. Bad tube at V6 or V7. 5. No B+ voltage at lugs 5 and 6 of V6. 6. Open cathode resistor at V7.
Improper filter selected for mode in use.	1. MS1F and MS2R wired incorrectly. 2. Reversed rotor or wafer at MS1 and MS2.
Improper selection of product or AM detectors.	1. Wrong BFO frequency caused by incorrect wiring at Y10, Y11, and Y12. 2. Y10, Y11, and Y12 mounted in wrong sockets. NOTE: Selection of detectors is made at MS4R. Selection of BFO frequency for product detection is made at MS4R.
No 2nd mixer (V3) output.	1. Bad tube at V3. 2. No B+ at plate and screen of V3. 3. Open cathode resistor R12. 4. Shorted LMO coaxial cable. 5. No LMO output (5.0 to 5.5 MHz). 6. Bad tube at V5. 7. Lack of filament or plate voltage to LMO. 8. Lack of output from V2 and/or T2. 9. No B+ at lugs 5 and 6 of V2. 10. Open cathode resistor R21. 11. No heterodyne oscillator (V4) output. 12. No RF amplifier (V1) output. 13. Reversed rotor or wafer at BS1R and BS3R. 14. Reversed rotor or wafer at BS5F and BS5R. 15. Reversed rotor or wafer at BS6R.

SYMPTOM	POSSIBLE CAUSE
No 1st mixer (V2) output.	1. Bad tube at V2. 2. No B+ at lugs 5 and 6 of V2. 3. Open cathode resistor R15. 4. No heterodyne oscillator (V4) output. 5. No B+ at lug 1 of V4. 6. Heterodyne oscillator plate coil untuned or defective. 7. Crystal defective or not in socket. 8. Crystal imporperly wired to BS1R. 9. Plate coils improperly wired to BS3R. 10. C202 at BS3F improperly wired or omitted. 11. Coaxial cable from BS3F to lug 1 of V2 shorted. 12. No RF amplifier (V1) output. 13. Reversed rotors on wafers at BS1R, BS3R, BS5 and BS6.
No RF Amplifier (V1) output or low sensitivity.	1. Bad tube at V1. 2. No B+ at lugs 5 and 6 of V1. 3. Open cathode resistor R2. 4. Antenna and RF amplifier coils not aligned properly. 5. Low heterodyne oscillator (V4) output. 6. Low B+ to V1 and V4. 7. Antenna and RF amplifier coils incorrectly wired. 8. Coaxial cable from BS5R to lug 1 of V1 shorted. 9. Reversed rotors or wafers at BS6R, BS5, and BS4.
Crystal calibrator (V8) inoperative.	1. Bad tube at V8. 2. No B+ at lugs 5 and 6 of V8. 3. Open cathode resistor R5. 4. C7 omitted or incorrectly wired. 5. Cathode lead to Function switch omitted. 6. Function switch not in CAL position. 7. Crystal not in socket. 8. Trimmer C5 or resistor R4 omitted or miswired.

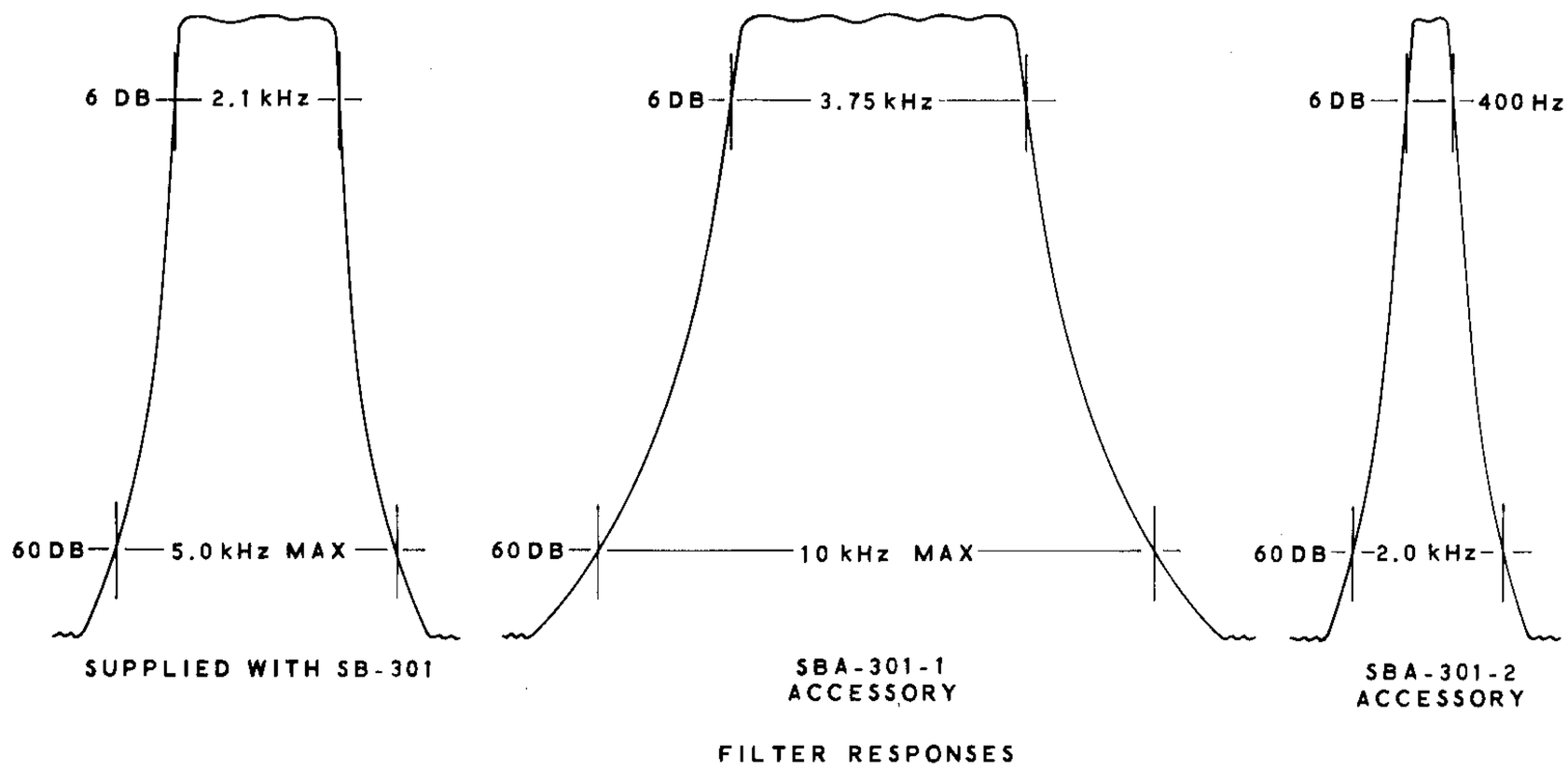

Figure 6-1

Only the SSB filter is furnished with the Receiver. The CW and AM filters may be obtained as accessories. See Figure 6-1 for the bandpass characteristic of each filter.

IF AMPLIFIERS

The signal is then fed through capacitor C101, and through stages V6 and V7, the first and second IF amplifiers. These stages are high gain voltage amplifiers. T3 and T4 are tuned for maximum gain per stage.

The "S" meter is connected in the IF circuits to indicate received signal strength. The S-Meter Adjust control is adjusted for zero S-units with the antenna disconnected and the RF Gain control fully clockwise.

NOISE LIMITER

The noise limiter circuit, which consists of diodes D1 and D2, capacitors C111 and C112, and resistor R236, is a full-wave, shunt-type diode limiter. The limiter is self-biased and automatically adjusts itself to the degree of modulation of the received signal.

The advantage of this self-biasing type of limiter is, that as the signal level moves up or down, the point at which it starts to limit also moves up or down. The ANL (automatic noise limiter) switch is located on the AF Gain control. The control knob is pulled out to turn the limiter on.

AGC

The desired amount of amplification for the RF and IF amplifiers is determined by the negative grid bias set by the RF Gain control. Also present on this same line is the AGC (automatic gain control) voltage. This voltage is obtained by coupling a portion of the IF output signal through capacitor C114 to AGC diodes D3 and D4. These diodes produce a negative DC voltage proportional to the signal strength. A signal producing a negative AGC voltage higher than the preset bias voltage causes the gain of V1, V6, and V7 to be reduced below the preset level. This produces an output level from the first RF and IF amplifier stages that remains nearly constant in spite of wide changes in the amplitude of the received signal.

The AGC action is instantaneous. However, the length of time it remains in control is determined by capacitors C113 and C228 along with resistor R112. These capacitors are charged by the AGC voltage when a higher than normal signal is received; C113 has a fast rate of discharge, and C228 a slow rate of discharge. The capacitors discharge through resistors R206 and R212,

and the RF Gain control. Because resistor R206 is so much larger than R212 and the RF Gain control, changing the setting of the RF Gain control has very little effect on the discharge time of capacitors C113 and C228. The AGC switch places only one of these capacitors in the circuit at a time.

PRODUCT DETECTOR/BFO AND BFO AMPLIFIER

Tube V9 is made up of two triodes and one pentode section. The IF output signal in the LSB, USB, and CW modes is fed through capacitor C118 to the grid of the product detector, V9A. V9B serves as a BFO (beat frequency) oscillator). The frequency at which V9B oscillates is determined by crystals Y10, Y11, and Y12. These crystals are selected by MS4R.

With the Mode switch in the RTTY position, crystal Y10 is used to produce a carrier frequency of 3392.110 kilohertz. Thus, the detected signals of 2125 kilohertz and 2975 kilohertz fall in the center of the bandpass frequency range of SSB crystal filter FL-1. (If desired, narrow-band RTTY operation can be achieved by changing the Mode switch to its CW position, and by exchanging the USB and the RTTY BFO crystals. This will, however, give high pitched audio for CW reception).

The BFO amplifier is inoperative in the RTTY mode to prevent accidental transceiving, as the audio bandpass is unsuitable for transmission. In the LSB (lower sideband) mode, crystal Y11 is used.

If USB (upper sideband) operation is desired, the Mode switch is placed in the USB position. MS4R switches crystal Y12 into the circuit, increasing the operating frequency of the BFO by 2.8 kilohertz. When this is done, the LMO frequency must also be changed 2.8 kilohertz, but in the opposite direction. These frequency changes result in changing to the upper sideband without changing the dial setting. The change in operating frequency of the LMO is done by a switching diode in the LMO.

The output signal from the BFO is coupled through capacitor C247 to V9C, a BFO amplifier. The output signal from V9C is coupled through capacitor C252 to the BFO jack on the rear of the Receiver, for use with a transmitter for transceiver operation. Stage V9C is inoperative when operating in the RTTY mode.

AF AMPLIFIERS

The audio output signal results from mixing the IF and BFO frequencies in the Product Detector.

The audio signal is coupled through capacitor C243 to MS4R. From MS4R the signal is fed to the grid of V10A, the first audio amplifier. This amplified signal is coupled through capacitor C121 to V10B, the second audio amplifier. The signal is then coupled through output transformer T5 to a speaker or headphones. From the secondary of T5, an 8 Ω output is available for speaker operation, and a high impedance output is available for headphone operation. The 500 Ω output is also used for ANTI-VOX operation with a Transceiver. Resistor R117 and capacitor C119 from the secondary of T5 to the cathode of V10A form a negative feedback circuit. The negative feedback circuit is used to provide a low distortion, stable audio output power of 1 watt.

AM DETECTION

In the AM mode, the BFO is turned off and the Product Detector is disconnected from the audio amplifier by MS4R. The IF output signal is coupled through capacitor C117 to D3, the AM detector diode. RF signals are bypassed to ground through capacitor C116. The resulting amplitude-detected audio signal is routed by MS4R to the AF Gain control and to audio amplifier stages V10A and V10B. The setting of the AF Gain control determines the audio output level from the Receiver.

CRYSTAL CALIBRATOR

The 100 kHz signal produced by V8, the crystal controlled calibrator stage, is coupled to the Receiver input. This signal can be used at any time to check dial calibration by placing the Function switch in the CAL position, and the Mode switch in the LSB or USB position. Zero beat cannot be heard in the CW mode due to the narrow bandpass of the CW filter, nor in the AM mode due to the absence of BFO injection.

MUTE JACK

The Mute jack on the rear of the Receiver is used with a transmitter for VOX operation to bias receiver tube stages V1, V2, V6, V7, V10B, and any converter stages to cutoff for muting.

POWER SUPPLY

The power supply uses a transformer for isolation from the AC line. Diodes D6 and D7 are used in a full-wave rectifier circuit. The B+ voltage is filtered by four-section capacitor C233 and resistors R216, R217, and R218. Diode D8 is used to develop negative voltage for use as bias. Transformer T1 includes a separate secondary winding for the tube filament and pilot lamp voltage.

CIRCUIT BOARD X-RAY VIEWS
(VIEWED FROM FOIL SIDE)

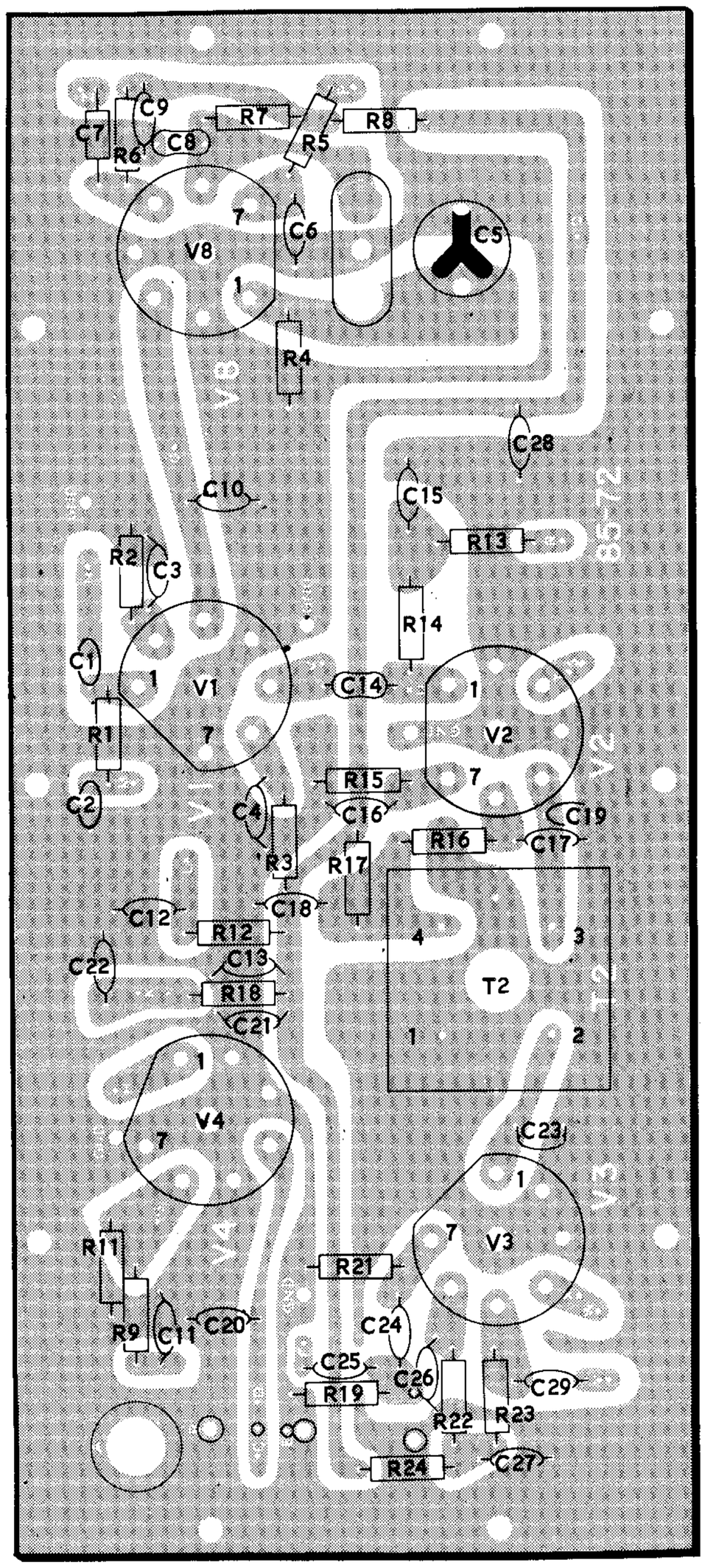

Figure 7-1

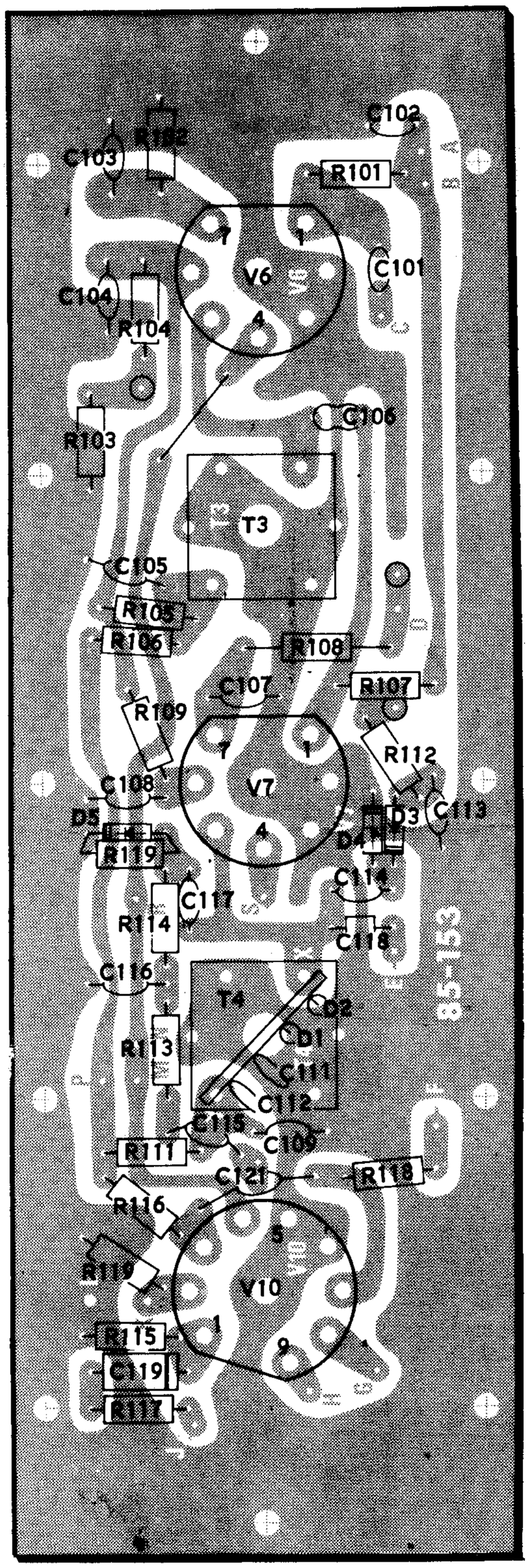
C102
R102
C103
R101
V6
C101
C104
R104
C106
R103
T3
C105
R105
R106
R108
C107
R107
R109
R112
V7
C108
D5
D3
C113
R119
D4
C114
C117
R114
C118
C116
T4
D2
D1
R113
C111
C112
C115
C109
R111
C121
R118
R116
R119
V10
R115
C119
R117

FIGURE 7-2

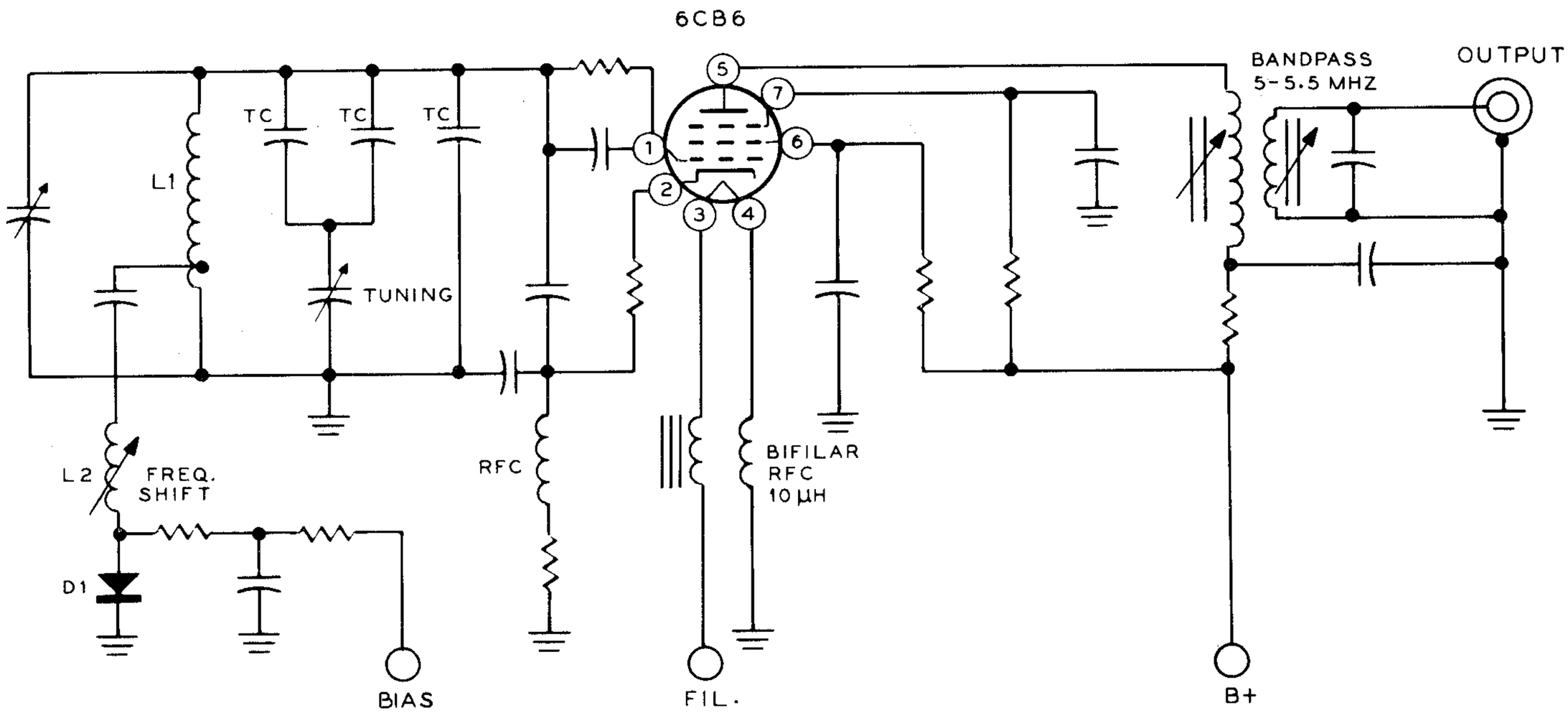

LMO SCHEMATIC

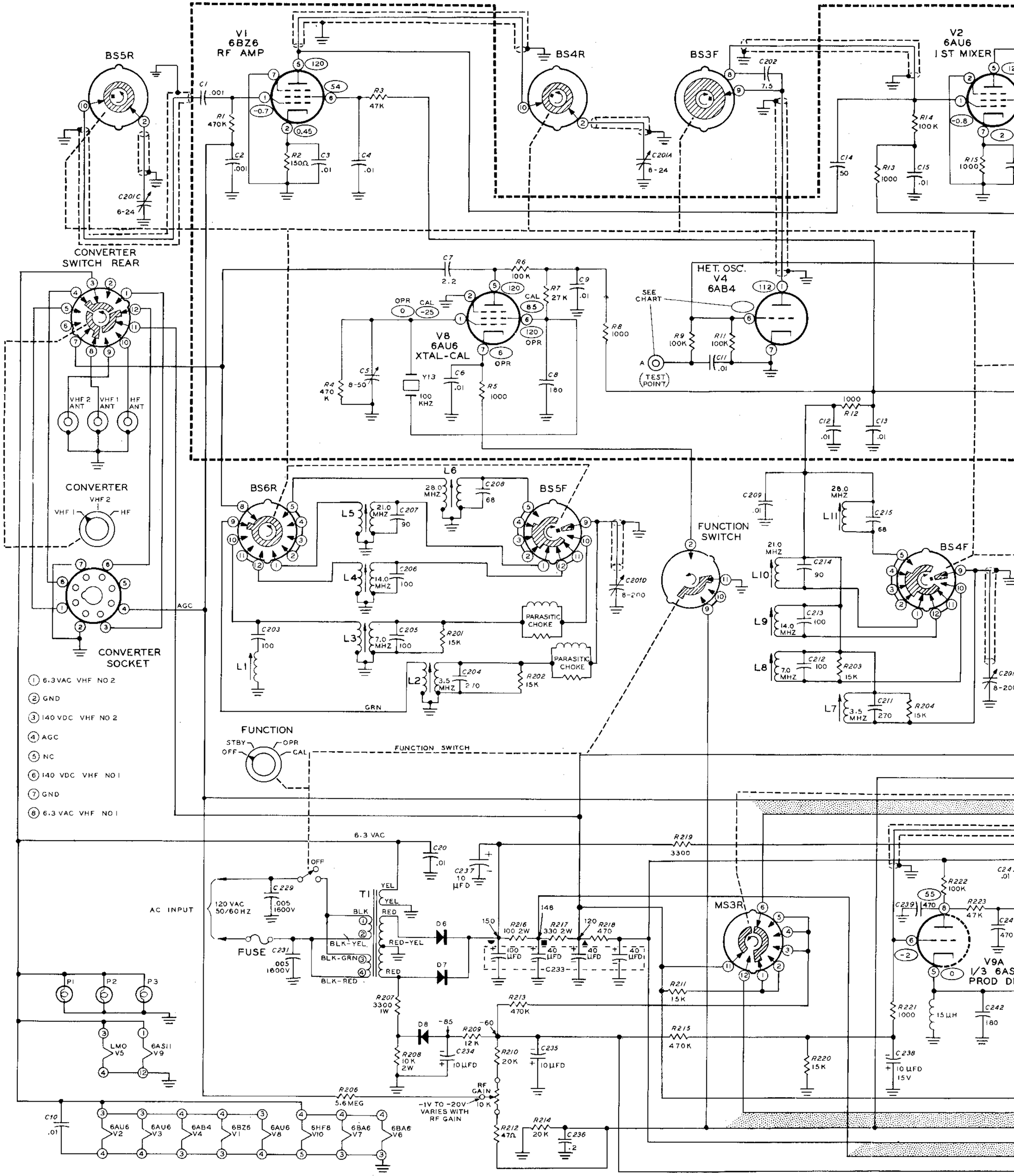

POWER TRANSFORMER MODIFICATION

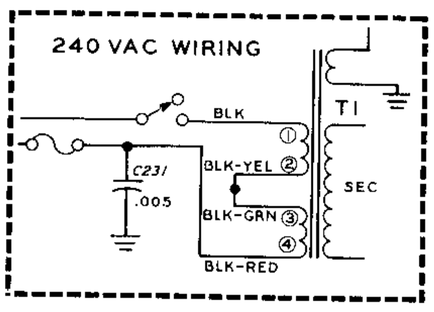

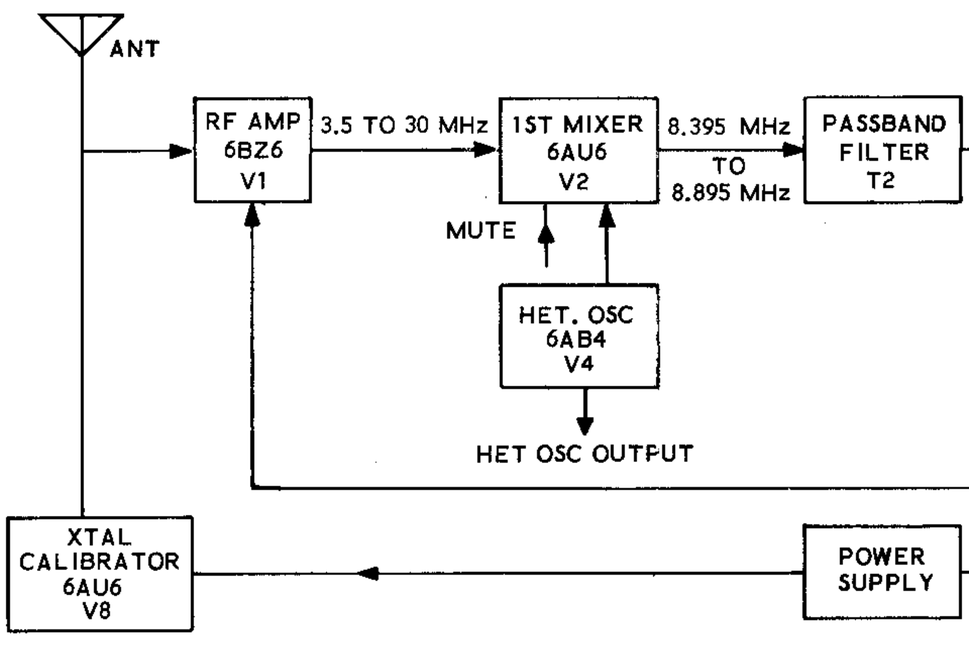

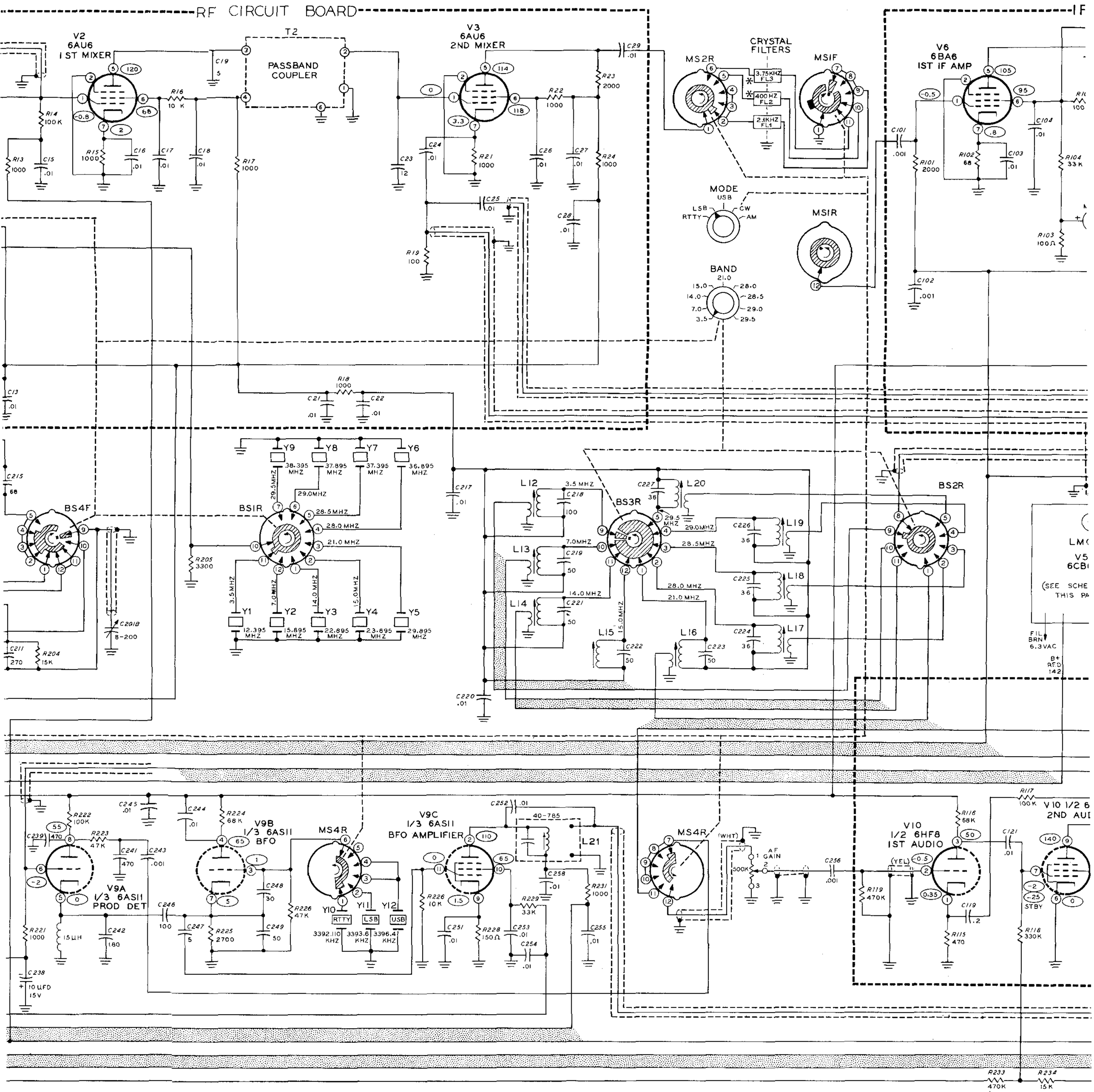

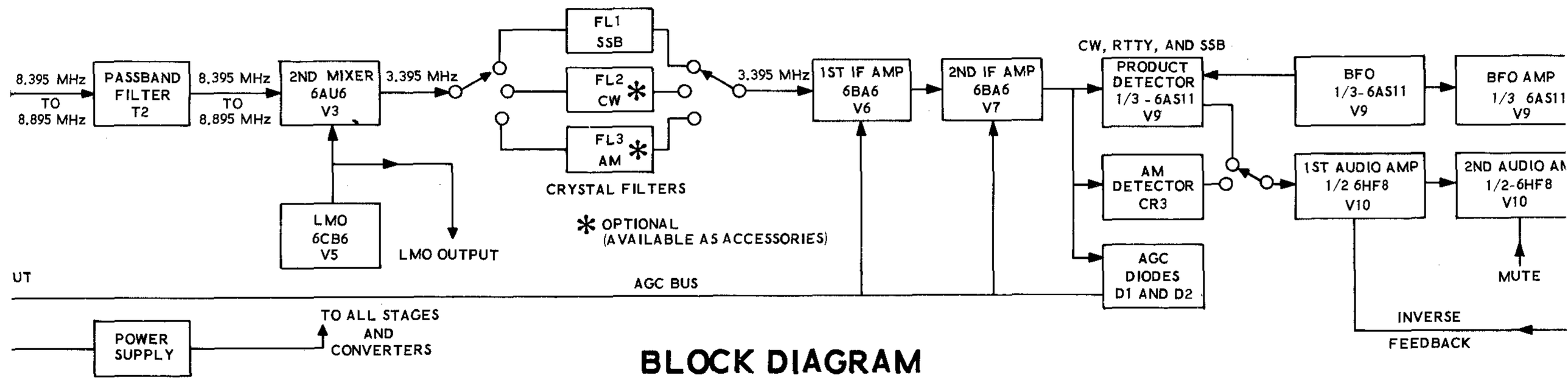

BLOCK DIAGRAM

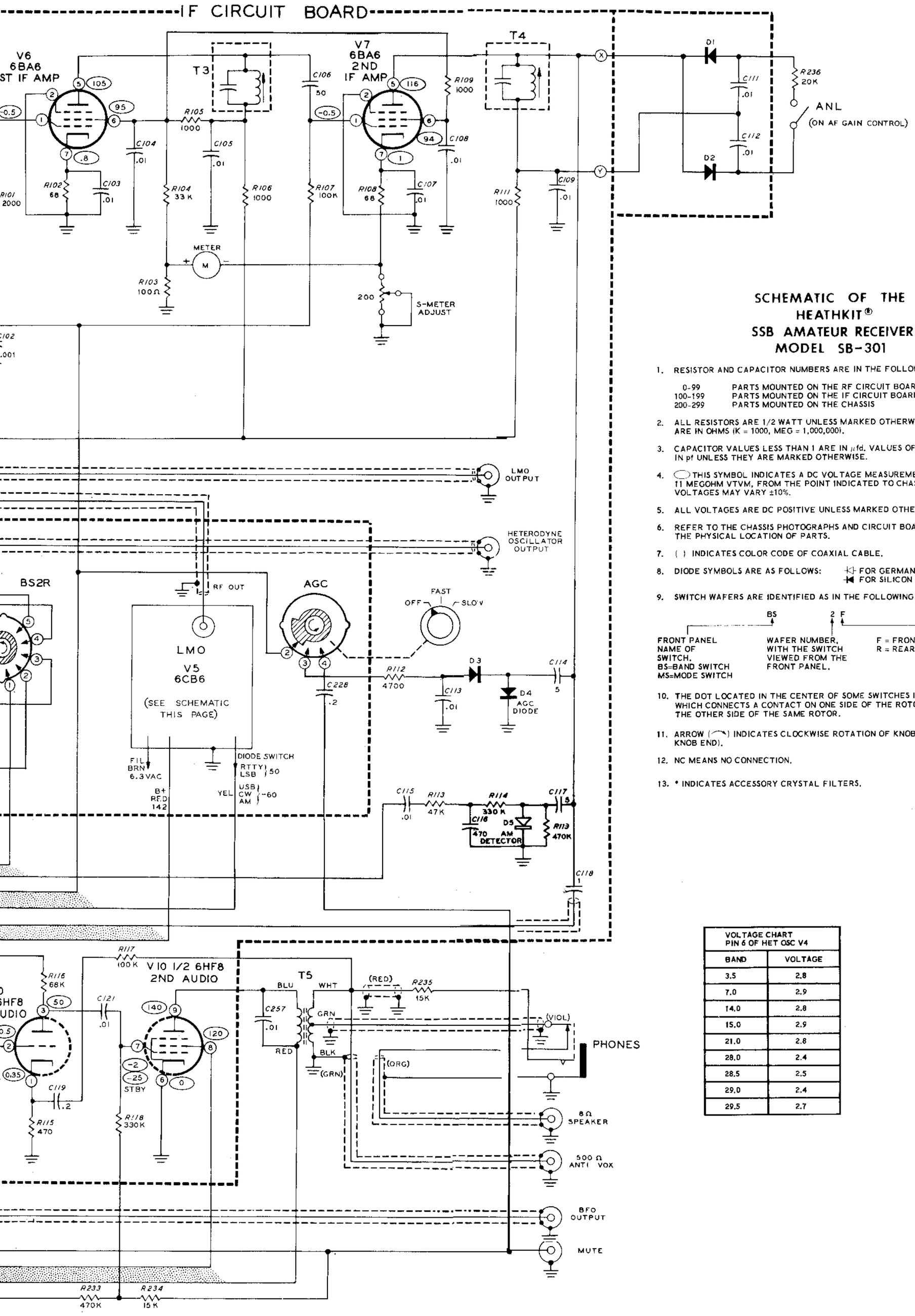

SCHEMATIC OF THE HEATHKIT® SSB AMATEUR RECEIVER MODEL SB-301

1. RESISTOR AND CAPACITOR NUMBERS ARE IN THE FOLLOWING GROUPS:

   0-99 PARTS MOUNTED ON THE RF CIRCUIT BOARD
   100-199 PARTS MOUNTED ON THE IF CIRCUIT BOARD
   200-299 PARTS MOUNTED ON THE CHASSIS

2. ALL RESISTORS ARE 1/2 WATT UNLESS MARKED OTHERWISE. RESISTOR VALUES ARE IN OHMS (K = 1000, MEG = 1,000,000).

3. CAPACITOR VALUES LESS THAN 1 ARE IN μfd. VALUES OF 1 AND ABOVE ARE IN pf UNLESS THEY ARE MARKED OTHERWISE.

4. ⬭ THIS SYMBOL INDICATES A DC VOLTAGE MEASUREMENT, TAKEN WITH AN 11 MEGOHM VTVM, FROM THE POINT INDICATED TO CHASSIS GROUND. VOLTAGES MAY VARY ±10%.

5. ALL VOLTAGES ARE DC POSITIVE UNLESS MARKED OTHERWISE.

6. REFER TO THE CHASSIS PHOTOGRAPHS AND CIRCUIT BOARD X-RAY VIEWS FOR THE PHYSICAL LOCATION OF PARTS.

7. ( ) INDICATES COLOR CODE OF COAXIAL CABLE.

8. DIODE SYMBOLS ARE AS FOLLOWS: FOR GERMANIUM DIODES. FOR SILICON DIODES.

9. SWITCH WAFERS ARE IDENTIFIED AS IN THE FOLLOWING EXAMPLE:

   BS — 2 — F

   FRONT PANEL NAME OF SWITCH. BS=BAND SWITCH MS=MODE SWITCH
   WAFER NUMBER, WITH THE SWITCH VIEWED FROM THE FRONT PANEL.
   F = FRONT SIDE OF THE WAFER. R = REAR SIDE OF THE WAFER.

10. THE DOT LOCATED IN THE CENTER OF SOME SWITCHES INDICATES A TIE PIN WHICH CONNECTS A CONTACT ON ONE SIDE OF THE ROTOR TO CONTACTS ON THE OTHER SIDE OF THE SAME ROTOR.

11. ARROW (⌒) INDICATES CLOCKWISE ROTATION OF KNOB (VIEWED FROM KNOB END).

12. NC MEANS NO CONNECTION.

13. * INDICATES ACCESSORY CRYSTAL FILTERS.

VOLTAGE CHART PIN 6 OF HET OSC V4	
BAND	VOLTAGE
3.5	2.8
7.0	2.9
14.0	2.8
15.0	2.9
21.0	2.8
28.0	2.4
28.5	2.5
29.0	2.4
29.5	2.7

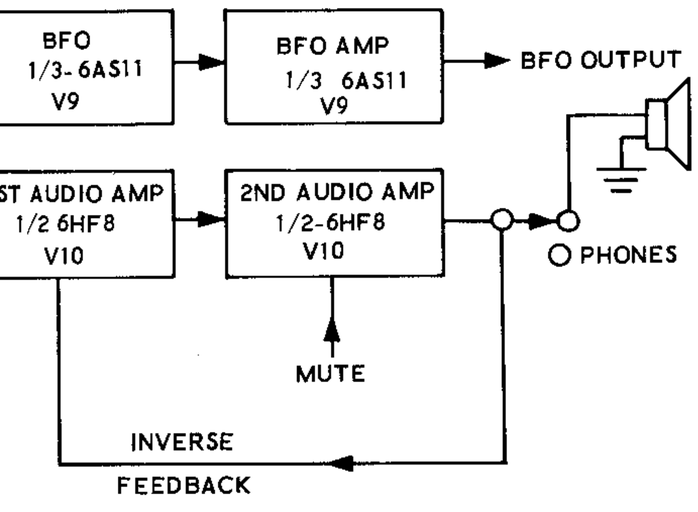

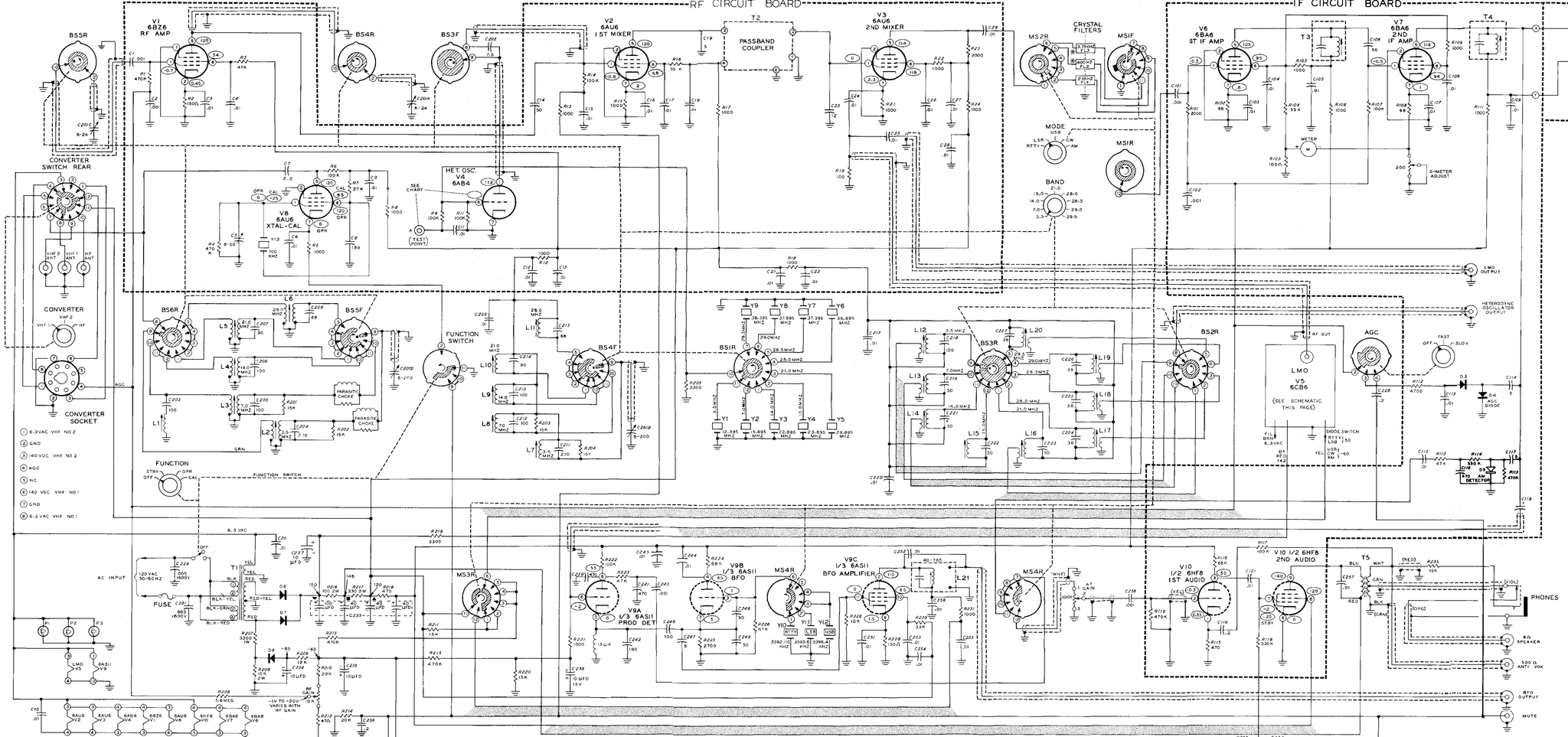

SCHEMATIC OF THE HEATHKIT® SSB AMATEUR RECEIVER MODEL SB-301

1. RESISTOR AND CAPACITOR NUMBERS ARE IN THE FOLLOWING GROUPS:
   - 0-99 PARTS MOUNTED ON THE RF CIRCUIT BOARD
   - 100-199 PARTS MOUNTED ON THE IF CIRCUIT BOARD
   - 200-299 PARTS MOUNTED ON THE CHASSIS
2. ALL RESISTORS ARE 1/2 WATT UNLESS MARKED OTHERWISE. RESISTOR VALUES ARE IN OHMS: K = 1000, MEG = 1,000,000.
3. CAPACITOR VALUES LESS THAN 1 ARE IN μfd, VALUES OF 1 AND ABOVE ARE IN pf UNLESS THEY ARE MARKED OTHERWISE.
4. ▭ THIS SYMBOL INDICATES A DC VOLTAGE MEASUREMENT, TAKEN WITH AN 11 MEGOHM VTVM, FROM THE POINT INDICATED TO CHASSIS GROUND. VOLTAGES MAY VARY ±10%.
5. ALL VOLTAGES ARE DC POSITIVE UNLESS MARKED OTHERWISE.
6. REFER TO THE CHASSIS PHOTOGRAPHS AND CIRCUIT BOARD X-RAY VIEWS FOR THE PHYSICAL LOCATION OF PARTS.
7. [ ] INDICATES COLOR CODE OF COAXIAL CABLE.
8. DIODE SYMBOLS ARE AS FOLLOWS: ⊲⊳ FOR GERMANIUM DIODES. ⊳| FOR SILICON DIODES.
9. SWITCH WAFERS ARE IDENTIFIED AS IN THE FOLLOWING EXAMPLE:

   BS — FRONT PANEL NAME OF SWITCH. BS=BAND SWITCH
   2 — WAFER NUMBER, WITH THE SWITCH VIEWED FROM THE FRONT PANEL.
   F — FRONT SIDE OF THE WAFER. R = REAR SIDE OF THE WAFER.
10. THE DOT LOCATED IN THE CENTER OF SOME SWITCHES INDICATES A TIE PIN WHICH CONNECTS A CONTACT ON ONE SIDE OF THE ROTOR TO CONTACTS ON THE OTHER SIDE OF THE SAME ROTOR.
11. ARROW (↻) INDICATES CLOCKWISE ROTATION OF KNOB (VIEWED FROM KNOB END).
12. NC MEANS NO CONNECTION.
13. * INDICATES ACCESSORY CRYSTAL FILTERS.

VOLTAGE CHART PIN 6 OF HET OSC V4	
BAND	VOLTAGE
3.5	2.8
7.0	2.9
14.0	2.8
15.0	2.9
21.0	2.8
28.0	2.4
28.5	2.5
29.0	2.4
29.5	2.7

POWER TRANSFORMER MODIFICATION

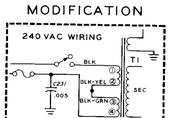

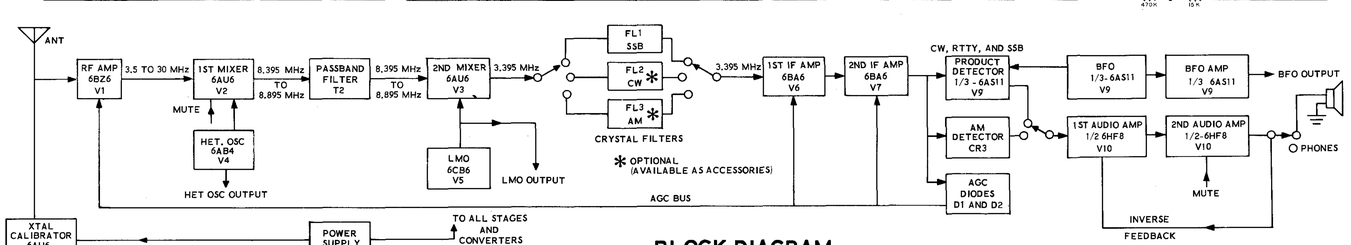

BLOCK DIAGRAM

REPLACEMENT PARTS PRICE LIST

IF CIRCUIT BOARD

Parts List # 1

PART No.	PRICE Each	DESCRIPTION
RESISTORS - 1/2 Watt		
1-2	.10	68 Ω
1-3	.10	100 Ω
1-6	.10	470 Ω
1-9	.10	1000 Ω
1-90	.10	2000 Ω 5%
1-16	.10	4700 Ω
1-24	.10	33 KΩ
1-25	.10	47 KΩ
1-60	.10	68 KΩ
1-26	.10	100 KΩ
1-31	.10	330 KΩ
1-33	.10	470 KΩ
CAPACITORS		
20-97	.15	50 pf mica
21-78	.10	5 pf disc
21-56	.10	470 pf disc
21-14	.10	.001 μfd disc

PART No.	PRICE Each	DESCRIPTION
Capacitors (cont'd.)		
21-16	.10	.01 μfd disc
27-34	.25	.2 μfd resin
28-2	.10	1 pf phenolic (brown-black-white)
GENERAL		
52-71	.65	IF transformer
56-26	.30	1N191 crystal diode
56-24	.60	1N458 silicon diode
56-28	.60	S-187 silicon diode
74-4	.35	Electrical tape
75-56	.10	Mica insulating washer
434-129	.15	7-pin tube socket
434-130	.15	9-pin tube socket
85-119-1	.35	Noise limiter circuit board
85-153-1	1.75	IF circuit board
331-6	.15	Solder
595-946	2.00	Manaul

RF CIRCUIT BOARD

Parts List # 2

PART No.	PRICE Each	DESCRIPTION
RESISTORS - 1/2 Watt		
1-3	.10	100 Ω
1-66	.10	150 Ω
1-9	.10	1000 Ω
1-90	.10	2000 Ω 5%
1-23	.10	27 KΩ
1-25	.10	47 KΩ
1-26	.10	100 KΩ
1-33	.10	470 KΩ
CAPACITORS		
20-130	.15	12 pf mica
20-97	.15	50 pf mica
20-105	.20	180 pf mica
21-78	.10	5 pf disc
21-14	.10	.001 μfd disc

PART No.	PRICE Each	DESCRIPTION
Capacitors (cont'd.)		
21-16	.10	.01 μfd disc
28-1	.10	2.2 pf phenolic (red-red-white)
31-36	.85	8-50 pf trimmer
GENERAL		
52-65	5.00	IF bandpass transformer
250-34	.05	4-40 x 1/2" screw
252-15	.05	4-40 nut
254-9	.05	#4 lockwasher
434-74	.15	Crystal socket
434-129	.15	7-pin tube socket
436-11	.15	Banana jack with nut
85-72-1	1.95	RF circuit board
490-5	.10	Nut starter

CHASSIS PARTS

Parts List # 3

PART No.	PRICE Each	DESCRIPTION
RESISTORS - 1/2 Watt		
1-21	.10	15 KΩ
CAPACITORS		
20-96	.15	36 pf mica
20-97	.15	50 pf mica
20-76	.15	68 pf mica
20-119	.15	90 pf mica
20-102	.15	100 pf mica
20-114	.20	270 pf mica
21-16	.10	.01 μfd disc
25-163	2.00	100-40-40-40 μfd electrolytic
26-74	3.75	4-section variable
COILS		
40-785	.95	BFO output
40-764	.45	80 meter RF
40-765	.45	40 meter RF
40-766	.40	20 meter RF
40-767	.40	15 meter RF
40-768	.40	10 meter RF
40-759	.60	80 meter antenna
40-760	.60	40 meter antenna
40-761	.55	20 meter antenna
40-762	.55	15 meter antenna
40-763	.55	10 meter antenna
40-769	.55	12.395 MHz
40-770	.60	15.895 MHz
40-771	.55	22.895 MHz
40-552	.40	23.895 MHz
40-772	.55	29.895 MHz
40-773	.55	36.895-38.395 MHz
CHOKE-TRANSFORMERS		
45-43	.25	RF choke
51-140	2.05	Audio output transformer
54-146-24	7.20	Power transformer
WIRE-CABLE-SLEEVING		
340-2	.05/ft	Bare wire
343-5	.10/ft	Large coaxial cable (RG-62)
343-7	.05/ft	Small coaxial cable (RG-174)
344-50	.05/ft	Black hookup wire
344-51	.05/ft	Brown hookup wire
344-52	.05/ft	Red hookup wire
344-53	.05/ft	Orange hookup wire
344-54	.05/ft	Yellow hookup wire
344-55	.05/ft	Green hookup wire

PART No.	PRICE Each	DESCRIPTION
Wire-Cable-Sleeving (cont'd.)		
344-56	.05/ft	Blue hookup wire
344-57	.05/ft	Violet hookup wire
344-59	.05/ft	White hookup wire
346-1	.05/ft	Sleeving
TERMINAL STRIPS		
431-57	.10	2-lug miniature
431-10	.10	3-lug
431-40	.10	4-lug
431-11	.10	5-lug
431-45	.10	6-lug
SOCKETS-JACK		
423-1	.55	Fuseholder
434-4	.30	Octal socket
432-4	.10	Line cord socket
434-121	.20	12-pin tube socket
434-42	.10	Phono socket
434-74	.15	Crystal socket
GENERAL		
10-61	.35	200 Ω twist tab control
10-202	.85	10 KΩ control
63-336	2.05	3-position rotary switch
73-45	.10	Plastic grommet
260-7	.05	Coil mounting clip
404-283	37.00	2.1 kHz SSB filter
435-1	.10	Octal socket mounting ring
481-1	.10	Capacitor mounting wafer
489-1	.15	Sandpaper
200-468-1	5.10	Chassis
HARDWARE		
#3 Hardware		
250-172	.05	3-48 x 3/8" screw
252-1	.05	3-48 nut
254-7	.05	#3 lockwasher
#4 Hardware		
250-34	.05	4-40 x 1/2" screw
252-15	.05	4-40 nut
254-9	.05	#4 lockwasher
#6 Hardware		
250-56	.05	6-32 x 1/4" screw
250-89	.05	6-32 x 3/8" screw

PART No.	PRICE Each	DESCRIPTION
#6 Hardware (cont'd.)		
250-27	.05	6-32 x 2" screw
252-3	.05	6-32 nut
252-23	.05	6-32 thumbnut
254-1	.05	#6 lockwasher
259-6	.05	Small #6 solder lug
259-1	.05	Large #6 solder lug
#8 Hardware		
250-87	.05	8-32 x 3/16" screw
250-137	.05	8-32 x 3/8" screw
252-4	.05	8-32 nut
253-42	.05	#8 flat washer
254-2	.05	#8 lockwasher

PART No.	PRICE Each	DESCRIPTION
3/8" Control Hardware		
252-7	.05	Control nut
253-10	.05	Control flat washer
254-5	.05	Control lockwasher
METAL PARTS		
206-310-1	.55	Coil enclosure
206-311	.50	Coil enclosure partition
204-557	.10	Capacitor mounting bracket
204-727	.10	Switch mounting bracket

Parts List # 4

PART No.	PRICE Each	DESCRIPTION
RESISTORS - 1/2 Watt		
1-1	.10	47 Ω
1-66	.10	150 Ω
1-6	.10	470 Ω
1-9	.10	1000 Ω
1-13	.10	2700 Ω
1-14	.10	3300 Ω
1-20	.10	10 KΩ
1-109	.10	12 KΩ 5%
1-21	.10	15 KΩ
1-132	.10	20 KΩ
1-24	.10	33 KΩ
1-25	.10	47 KΩ
1-60	.10	68 KΩ
1-26	.10	100 KΩ
1-33	.10	470 KΩ
1-86	.10	5.6 megohm
Other Resistors		
1-3-1	.10	3300 Ω 1 watt
1-20-2	.20	100 Ω 2 watt
1-16-2	.20	330 Ω 2 watt
1-3-2	.20	10 KΩ 2 watt
CAPACITORS		
Mica		
20-52	.15	7.5 pf
20-100	.15	30 pf
20-97	.15	50 pf
20-102	.15	100 pf
20-105	.20	180 pf

PART No.	PRICE Each	DESCRIPTION
Disc		
21-78	.10	5 pf
21-56	.10	470 pf
21-14	.10	.001 μfd
21-72	.20	.005 μfd 1.4 KV
21-16	.10	.01 μfd
Other Capacitors		
25-54	.40	10 μfd 15 V electrolytic
25-147	.50	10 μfd 150 V electrolytic
27-34	.25	.2 μfd Mylar
GENERAL		
40-546	.60	8.5 MHz trap coil
45-51	.25	15 μh choke
57-27	.60	Silicon diode
63-422	5.00	9-position 6-wafer rotary switch
63-423	4.70	5-position 4-wafer rotary switch
134-137	5.00	Cable harness (large)
134-143	.90	Wire harness (small)
250-56	.05	6-32 x 1/4" screw
250-276	.05	6-32 x 3/8" flat head screw
251-1	.05	6-32 spade bolt
252-3	.05	6-32 nut
254-1	.05	#6 lockwasher
254-5	.05	Control lockwasher
259-1	.05	Large #6 solder lug
436-21	.95	Phone jack
204-560	.25	Chassis rail
206-316	.25	Switch shield

Parts List # 5

PART No.	PRICE Each	DESCRIPTION
GENERAL		
19-66	1.00	500 KΩ control w/switch
27-34	.25	.2 μfd Mylar capacitor
63-335	1.75	3-position rotary switch
63-421	2.60	4-position rotary with snap switch
89-3	.45	Line cord
110-40	63.30	LMO (linear master oscillator)
206-86	.10	Pilot lamp shield
255-59	.15	Plastic foot spacer
261-9	.05	Rubber foot
391-45	.30	SB-301 nameplate
407-99	9.85	Meter
431-1	.10	1-lug terminal strip
434-90	.20	Pilot lamp socket
438-4	.10	Phono plug
438-6	.35	Octal plug
440-1	.20	Octal plug cap
352-13	.15	Silicone grease
CRYSTALS		
404-43	5.00	100 kHz
404-280	5.00	3392.110 kHz
404-205	5.00	3393.6 kHz
404-206	5.00	3396.4 kHz
404-207	4.35	12.395 MHz
404-208	4.35	15.895 MHz
404-209	4.35	22.895 MHz
404-279	4.30	23.895 MHz
404-210	4.35	29.895 MHz
404-211	4.35	36.895 MHz
404-212	4.35	37.395 MHz
404-213	4.35	37.895 MHz
404-214	4.35	38.395 MHz
TUBES-LAMPS-FUSE		
411-58	1.25	6AB4 tube
411-200	2.55	6AS11 tube
411-11	1.00	6AU6 tube
411-90	.95	6BA6 tube
411-126	1.05	6BZ6 tube
411-171	2.00	6HF8 tube
412-20	.20	#47 pilot lamp
421-3	.30	2 ampere slow-blow fuse

PART No.	PRICE Each	DESCRIPTION
SHAFTS-BUSHINGS-COUPLINGS		
453-145	.15	Small diameter shaft
453-123	.20	Large diameter shaft
455-11	.10	Split shaft bushing
455-13	.10	Threaded bushing
456-4	.70	Insulated coupling
456-7	.25	Metal coupling
KNOBS		
462-175	.15	7/16" diameter aluminum
462-191	.70	1-1/8" diameter
462-193	1.05	2-1/2" diameter
462-195	.50	Lever
DIAL PARTS		
446-40	.70	Escutcheon
100-450	6.00	Dial drive assembly
Consisting of the following:		
204-553	.55	Dial mounting bracket
100-443	1.00	Dial pointer assembly
464-30-1	.25	Plastic dial window
100-447	.50	Dial pointer drive arm
250-63	.05	3-48 x 1/8" screw
266-74	.10	Nylon spiral follower
100-445	.45	Zero set drive pulley (small)
100-449	2.50	Circular dial
100-444	1.65	Dial drive pulley (large)
455-42	.90	Drive shaft bushing assembly
TOOLS		
490-1	.10	Plastic alignment tool
490-23	.10	#4 allen wrench
490-85	.15	#8 allen wrench
HARDWARE		
#3 Hardware		
250-251	.20	3-48 x 3/8" flat head screw
252-1	.05	3-48 nut
254-7	.05	#3 lockwasher
#4 Hardware		
250-156	.10	4-40 x 1/8" screw

PART No.	PRICE Each	DESCRIPTION
#6 Hardware		
250-56	.05	6-32 x 1/4" screw
250-218	.05	6-32 x 3/8" oval head screw
250-26	.05	6-32 x 5/8" screw
250-40	.05	6-32 x 1-1/2" screw
252-3	.05	6-32 nut
253-25	.05	Small #6 flat washer
253-40	.05	Large #6 flat washer
254-1	.05	#6 lockwasher
#8 Hardware		
250-105	.10	8-32 x 1/8" setscrew
250-93	.05	8-32 x 1/4" setscrew
250-87	.05	8-32 x 3/16" screw
250-260	.05	8-32 x 1/4" oval head screw

PART No.	PRICE Each	DESCRIPTION
3/8" Control Hardware		
252-7	.05	3/8" control nut
253-10	.05	Control flat washer
254-5	.05	Control lockwasher
259-10	.05	Control solder lug
METAL PARTS		
90-341	20.80	Cabinet
203-453-1	1.75	Front panel

The above prices apply only on purchases from the Heath Company where shipment is to a U.S.A. destination. Add 10% (minimum 25 cents) to the price when ordering from an authorized Service Center or Heathkit Electronic Center to cover local sales tax, postage and handling. Outside the U.S.A. parts and service are available from your local Heathkit source and will reflect additional transportation, taxes, duties and rates of exchange.

HEATH COMPANY

BENTON HARBOR, MICHIGAN

THE WORLD'S FINEST ELECTRONIC EQUIPMENT IN KIT FORM

LITHO IN U. S. A.

specifications

FOR THE

HEATHKIT

Pioneer And World-Leader in Electronic Kits

SSB RECEIVER

Model SB-301

ACCESSORIES

SBA-301-1 AM FILTER

SBA-301-2 CW FILTER

All prices are subject to change without notice. The Heath Company reserves the right to discontinue instruments and to change specifications at any time.

HEATH COMPANY,
BENTON HARBOR, MICHIGAN

596-946 PRINTED IN U. S. A. 3/22/68

SPECIFICATIONS

Frequency Range (megahertz).	3.5 to 4.0, 7.0 to 7.5, 14.0 to 14.5, 15.0 to 15.3, 21.0 to 21.5, 28.0 to 30.
Intermediate Frequency (IF).	3.395 megahertz.
Frequency Stability.	Less than 100 Hz drift per hour after 20 minutes warmup, under normal ambient conditions. Less than 100 Hz drift for ±10% line voltage variation.
Frequency Selection.	Built-in LMO (Linear Master Oscillator).
Modes Of Operations	
RTTY.	Radio teletype (frequency-shift keyed continuous wave).
SSB.	Single sideband (suppressed carrier, with selectable upper or lower sideband).
AM.	Continuous wave.
CW.	Keyed continuous wave (1000 Hz offset crystal for cross-mode operation between USB and CW).
Sensitivity.	Less than 0.25 microvolt for 10 db signal-plus-noise to noise ratio for SSB operation.
Overall Gain.	Less than 1.5 microvolt for 0.5 watts audio output.

Tube Complement.	1 - 6CB6: LMO 1 - 6BZ6: RF amplifier. 2 - 6AU6: 1st mixer; crystal calibrator. 1 - 6AB4: Heterodyne oscillator. 1 - 6AU6: 2nd mixer. 2 - 6BA6: IF amplifier. 1 - 6HF8: 1st audio, audio output. 1 - 6AS11: Product detector, BFO, and BFO amplifier.
Diode Complement	
Germanium Diode.	1 - 1N191: AM detector.
Silicon Diode.	2 - 1N548: AGC diode.
Silicon Diode.	2 - S187: Noise limiter.
Silicon Rectifier.	3 - 1N2079: Power supply.
Cabinet Dimensions.	14-7/8" wide x 6-5/8" high x 13-3/8" deep.
Net Weight.	17 lbs.

The Heath Company reserves the right to discontinue instruments and to change specifications at any time without incurring any obligation to incorporate new features in instruments previously sold.

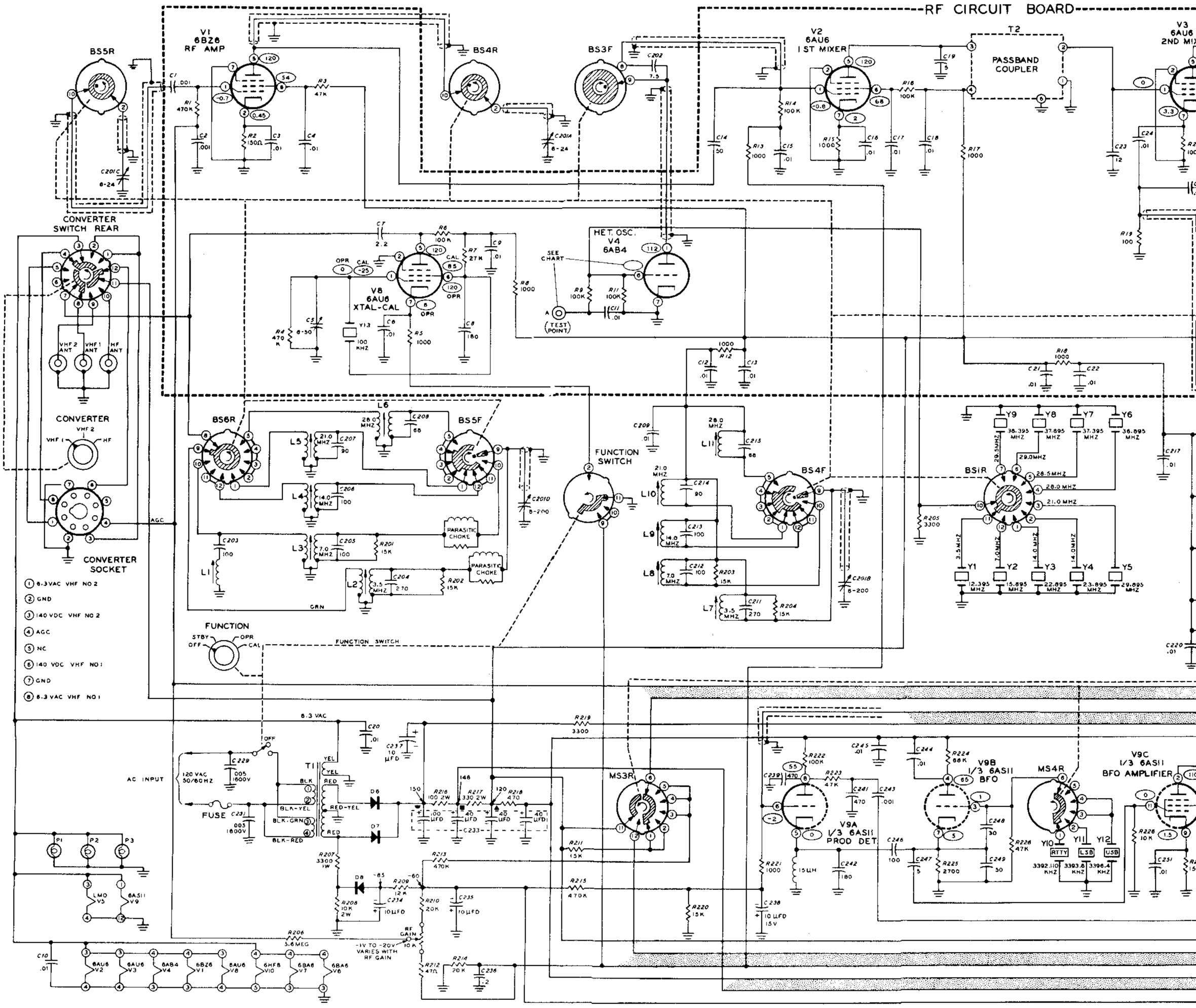

POWER TRANSFORMER MODIFICATION

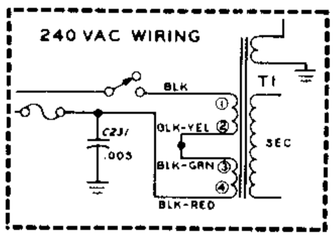

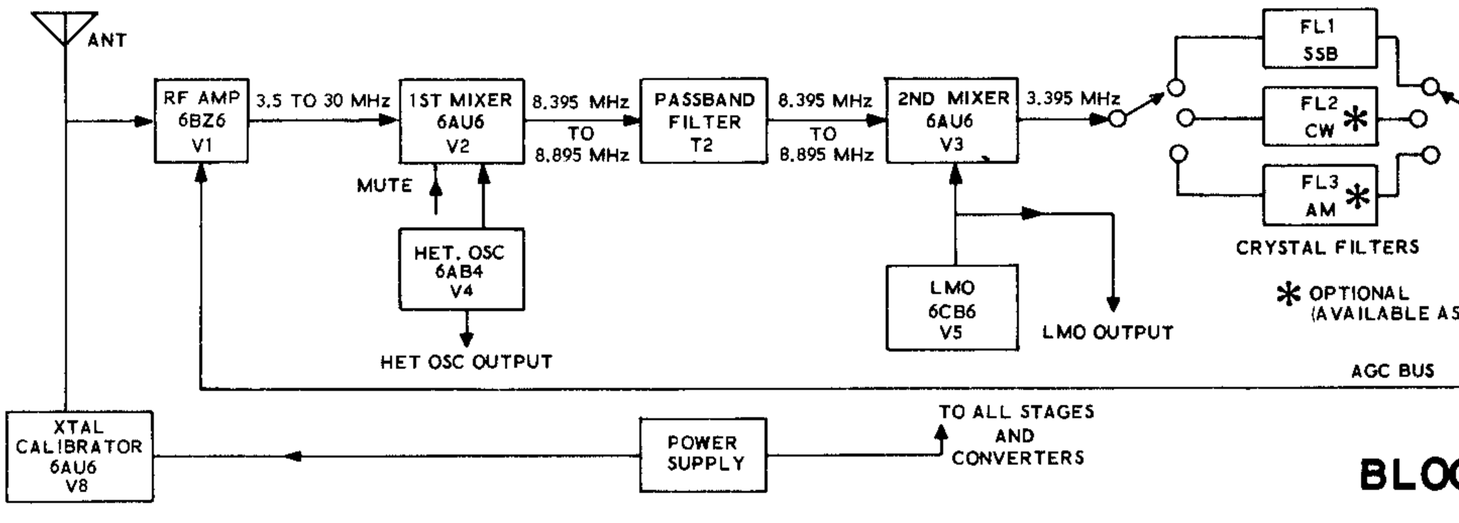

BLOC

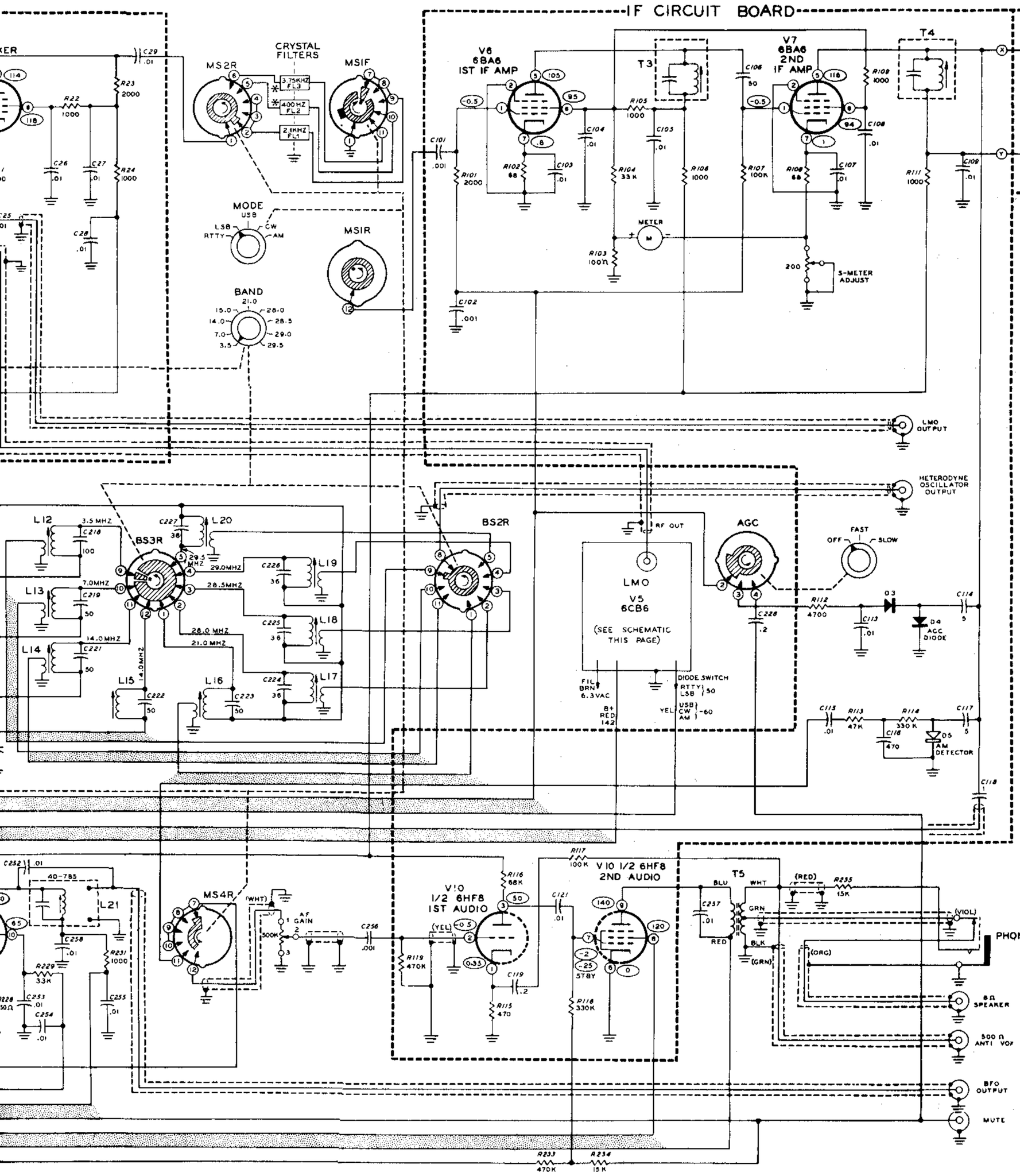

SCHEMATIC OF THE HEATHKIT® SSB AMATEUR RECEIVER MODEL SB-301

1. RESISTOR AND CAPACITOR NUMBERS ARE IN THE FOLLOWING GROUPS:

0-99	PARTS MOUNTED ON THE RF CIRCUIT BOARD
100-199	PARTS MOUNTED ON THE IF CIRCUIT BOARD
200-299	PARTS MOUNTED ON THE CHASSIS

2. ALL RESISTORS ARE 1/2 WATT UNLESS MARKED OTHERWISE. RESISTOR VALUES ARE IN OHMS (K = 1000, MEG = 1,000,000).
3. CAPACITOR VALUES LESS THAN 1 ARE IN µfd. VALUES OF 1 AND ABOVE ARE IN pf UNLESS THEY ARE MARKED OTHERWISE.
4. ⬭ THIS SYMBOL INDICATES A DC VOLTAGE MEASUREMENT, TAKEN WITH AN 11 MEGOHM VTVM, FROM THE POINT INDICATED TO CHASSIS GROUND. VOLTAGES MAY VARY ±10%.
5. ALL VOLTAGES ARE DC POSITIVE UNLESS MARKED OTHERWISE.
6. REFER TO THE CHASSIS PHOTOGRAPHS AND CIRCUIT BOARD X-RAY VIEWS FOR THE PHYSICAL LOCATION OF PARTS.
7. ( ) INDICATES COLOR CODE OF COAXIAL CABLE.
8. DIODE SYMBOLS ARE AS FOLLOWS: ⊳| FOR GERMANIUM DIODES, |◀ FOR SILICON DIODES.
9. SWITCH WAFERS ARE IDENTIFIED AS IN THE FOLLOWING EXAMPLE:

BS — FRONT PANEL NAME OF SWITCH. BS=BAND SWITCH, MS=MODE SWITCH

2 — WAFER NUMBER, WITH THE SWITCH VIEWED FROM THE FRONT PANEL.

F — F = FRONT SIDE OF THE WAFER. R = REAR SIDE OF THE WAFER.

10. THE DOT LOCATED IN THE CENTER OF SOME SWITCHES INDICATES A TIE PIN WHICH CONNECTS A CONTACT ON ONE SIDE OF THE ROTOR TO CONTACTS ON THE OTHER SIDE OF THE SAME ROTOR.
11. ARROW (⌒) INDICATES CLOCKWISE ROTATION OF KNOB (VIEWED FROM KNOB END).
12. NC MEANS NO CONNECTION.
13. * INDICATES ACCESSORY CRYSTAL FILTERS.

VOLTAGE CHART
PIN 6 OF HET OSC V4

BAND	VOLTAGE
3.5	2.8
7.0	2.9
14.0	2.8
15.0	2.9
21.0	2.8
28.0	2.4
28.5	2.5
29.0	2.4
29.5	2.7

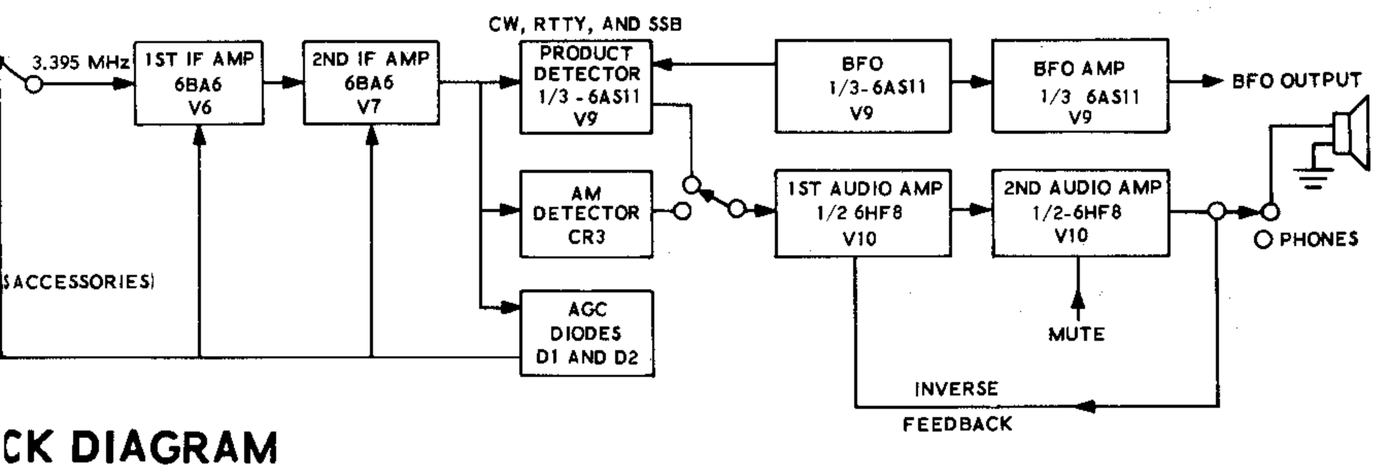

CK DIAGRAM

Audio Output Impedance	
Matching Speaker.	8 Ω.
Matching Headphones.	High impedance.
Audio Output Power.	1 watt with less than 8% distortion.
Muting.	Open external ground at Mute socket.
Power Requirements.	105 to 125 or 210 to 250 volts AC, 50/60 Hz, 50 watts.
Controls	
Front Panel.	Main Tuning dial. Function switch. Mode switch. AGC switch. AF Gain control/ANL switch. Band switch. Preselector. Converter switch. RF Gain control.
Chassis.	S-Meter Adjust control.
Connections	
Front Panel.	Phones.
Rear Apron.	HF Antenna. VHF Antenna #1. VHF Antenna #2. Mute. Anti-Vox 500 Ω. Speaker 8 Ω. Heterodyne Oscillator. LMO. BFO. VHF converter power socket. 4-Spare sockets. Line cord socket.

Selectivity

RTTY	2.1 kHz at 6 db down, 5.0 kHz maximum at 60 db down (crystal filter supplied).
SSB	2.1 kHz at 6 db down, 5.0 kHz maximum at 60 db down (crystal filter supplied).
AM	3.75 kHz at 6 db down, 10 kHz maximum at 60 db down (crystal filter available as an accessory).
CW	400 Hz at 6 db down, 2.0 kHz maximum at 60 db down (crystal filter available as an accessory).
Image Rejection	60 db or better.
IF Rejection	50 db or better.
Spurious Response	All below 1 microvolt equivalent signal input.

Dial Accuracy

Electrical	Within 400 Hz on all bands, after calibration at nearest 100 kHz point.
Visual	Within 200 Hz on all bands.
Calibration	Every 100 kHz.
Dial Backlash	No more than 50 Hz.
Antenna Input Impedance	50 Ω nominal unbalanced.

Audio Response

RTTY (normal)	1840 to 3940 Hz nominal at 6 db.
RTTY (narrow shift)	2690 to 3090 Hz nominal at 6 db.
SSB	350 to 2450 Hz nominal at 6 db.
AM (with accessory filter)	200 to 3500 Hz nominal at 6 db.
CW (with accessory filter)	800 to 1200 Hz nominal at 6 db.

INTRODUCTION

The Heathkit Model SB-301 Receiver is capable of receiving SSB, AM, CW, and RTTY signals on all amateur bands from 3.5 to 30 megahertz*. Separate AM and CW crystal filters can be obtained. These crystal filters are switch selected from the front panel for these modes of operation to assure optimum selectivity and performance. If these optional filters are not obtained, AM signals are received using the exalted carrier method, and CW may be received in either SSB mode.

The preassembled, prealigned LMO (linear master oscillator) and crystal-controlled heterodyne oscillators assure highly accurate and stable operation. The use of circuit boards and a wiring harness provide a clean chassis layout.

Other features of this Receiver are special antenna and power connections for VHF converters, a 100 kilohertz crystal calibrator, provisions for 15 MHz WWV reception, for transceiver operation with the SB-401 companion Transmitter, and a smooth, virtually backlash-free, dial tuning mechanism. The transformer-operated silicon diode power supply is a long-life, low-heat power source.

*This Manual uses the new IEEE (Institute of Electrical and Electronic Engineers) international standard term "hertz" as the basic unit of frequency. The terms are used as follows:

Hz (hertz) = cps (cycles per second).
kHz (kilohertz) = kc (kilocycles per second).
MHz (megahertz) = mc (megacycles per second).

BAND	HETERODYNE OSCILLATOR FREQUENCY (CRYSTAL FIXED)	RECEIVED SIGNAL FREQUENCY	PASSBAND SIGNAL FREQUENCY (BETWEEN 8.395 AND 8.895)	LMO MIXER OUTPUT CRYSTAL FILTERS AND IF (FIXED)	LMO (BETWEEN 5 AND 5.5 MHz)
3.5 to 4	12.395	3.895	8.5	3.395	5.105
7 to 7.5	15.895	7.2	8.695	3.395	5.3
14 to 14.5	22.895	14.2	8.695	3.395	5.3
15.0 to 15.3	23.895	15.2	8.695	3.395	5.3
21 to 21.5	29.895	21.3	8.595	3.395	5.2
28 to 28.5	36.895	28.1	8.795	3.395	5.4
28.5 to 29	37.395	28.7	8.695	3.395	5.3
29 to 29.5	37.895	29.2	8.695	3.395	5.3
29.5 to 30	38.395	29.6	8.795	3.395	5.4

Frequencies In Megahertz

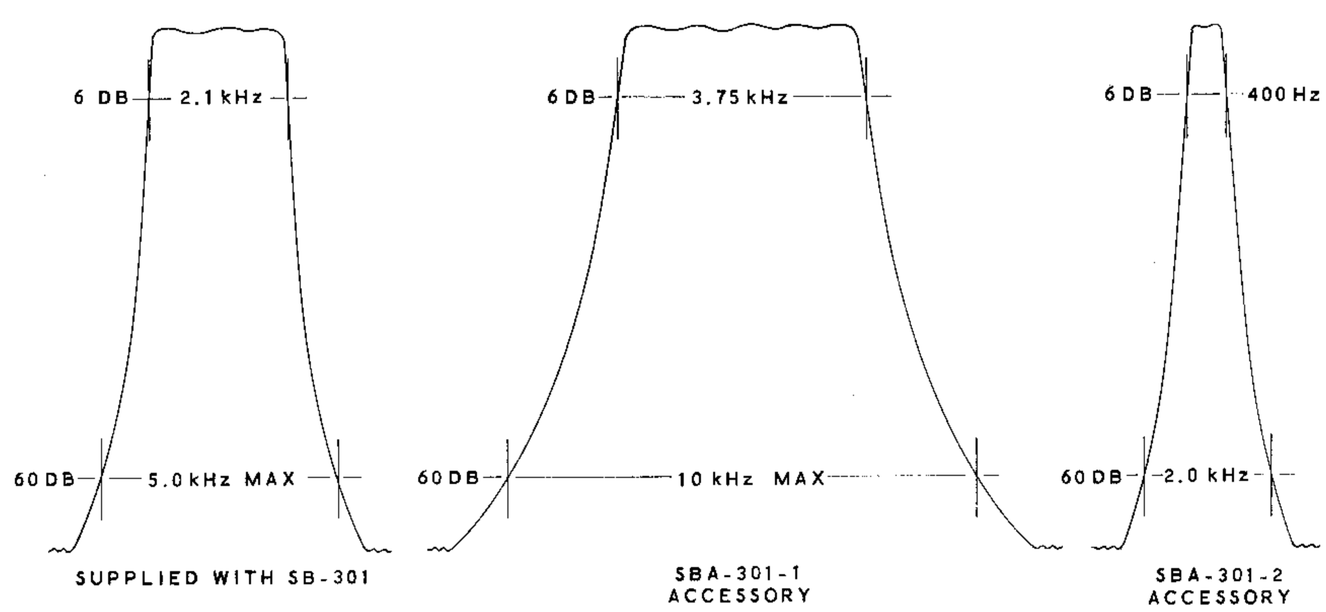

FILTER RESPONSES

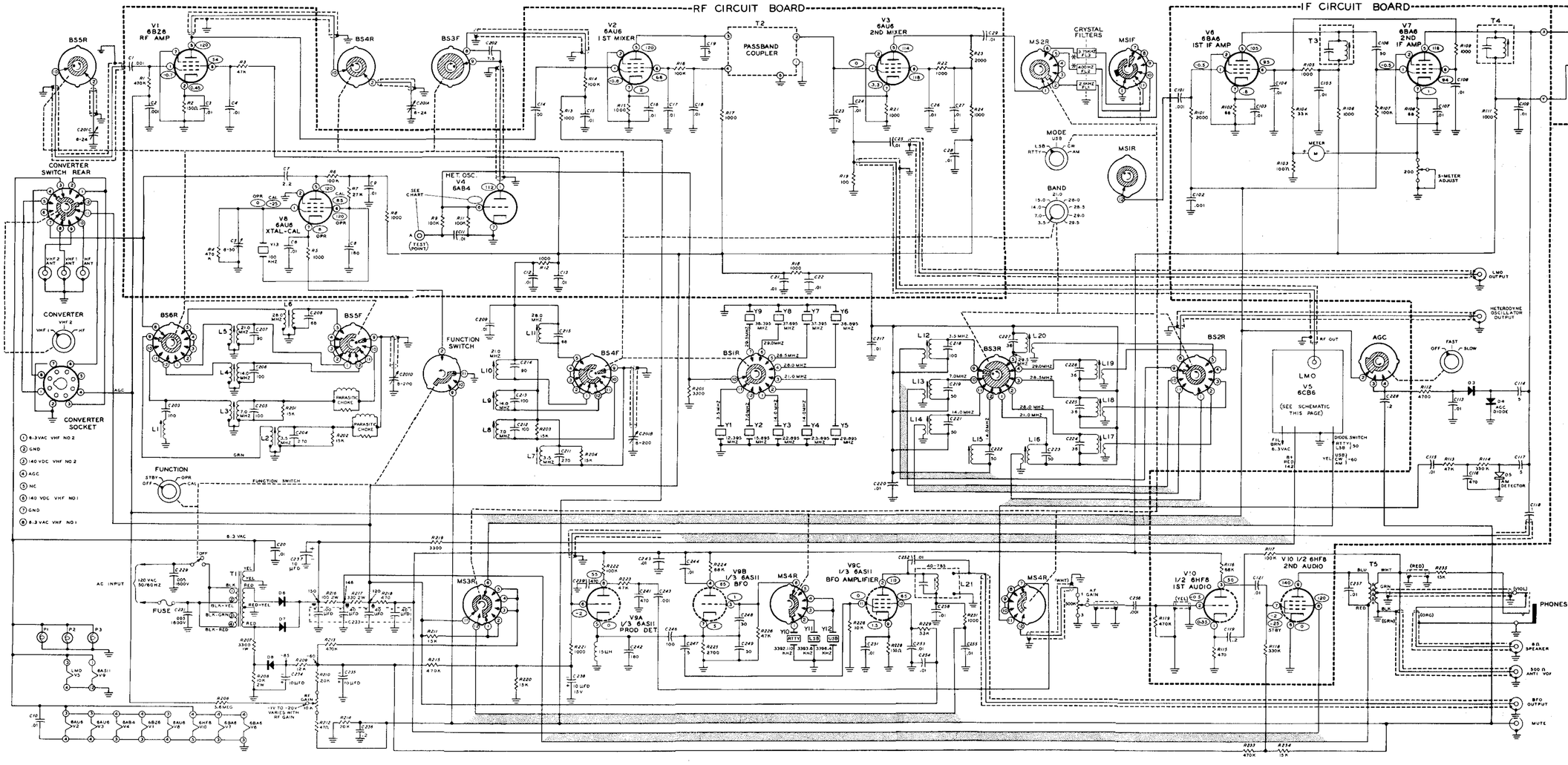

SCHEMATIC OF THE HEATHKIT® SSB AMATEUR RECEIVER MODEL SB-301

1. RESISTOR AND CAPACITOR NUMBERS ARE IN THE FOLLOWING GROUPS:

0-99	PARTS MOUNTED ON THE RF CIRCUIT BOARD
100-199	PARTS MOUNTED ON THE IF CIRCUIT BOARD
200-299	PARTS MOUNTED ON THE CHASSIS

2. ALL RESISTORS ARE 1/2 WATT UNLESS MARKED OTHERWISE. RESISTOR VALUES ARE IN OHMS (K = 1000, MEG = 1,000,000).
3. CAPACITOR VALUES LESS THAN 1 ARE IN μfd. VALUES OF 1 AND ABOVE ARE IN pf UNLESS THEY ARE MARKED OTHERWISE.
4. ⊖ THIS SYMBOL INDICATES A DC VOLTAGE MEASUREMENT, TAKEN WITH AN 11 MEGOHM VTVM, FROM THE POINT INDICATED TO CHASSIS GROUND. VOLTAGES MAY VARY ±10%.
5. ALL VOLTAGES ARE DC POSITIVE UNLESS MARKED OTHERWISE.
6. REFER TO THE CHASSIS PHOTOGRAPHS AND CIRCUIT BOARD X-RAY VIEWS FOR THE PHYSICAL LOCATION OF PARTS.
7. ( ) INDICATES COLOR CODE OF COAXIAL CABLE.
8. DIODE SYMBOLS ARE AS FOLLOWS: ⊣⊢ FOR GERMANIUM DIODES, ⊣▶⊢ FOR SILICON DIODES.
9. SWITCH WAFERS ARE IDENTIFIED AS IN THE FOLLOWING EXAMPLE:

BS 3 — FRONT PANEL NAME OF SWITCH. BS=BAND SWITCH, MS=MODE SWITCH

2 F — WAFER NUMBER, WITH THE SWITCH VIEWED FROM THE FRONT PANEL. F = FRONT SIDE OF THE WAFER, R = REAR SIDE OF THE WAFER.

10. THE DOT LOCATED IN THE CENTER OF SOME SWITCHES INDICATES A TIE PIN WHICH CONNECTS A CONTACT ON ONE SIDE OF THE ROTOR TO CONTACTS ON THE OTHER SIDE OF THE SAME ROTOR.
11. ARROW (→) INDICATES CLOCKWISE ROTATION OF KNOB (VIEWED FROM KNOB END).
12. NC MEANS NO CONNECTION.
13. * INDICATES ACCESSORY CRYSTAL FILTERS.

VOLTAGE CHART
PIN 6 OF HET OSC V4

BAND	VOLTAGE
3.5	2.8
7.0	2.9
14.0	2.8
15.0	2.9
21.0	2.8
28.0	2.4
28.5	2.5
29.0	2.4
29.5	2.7

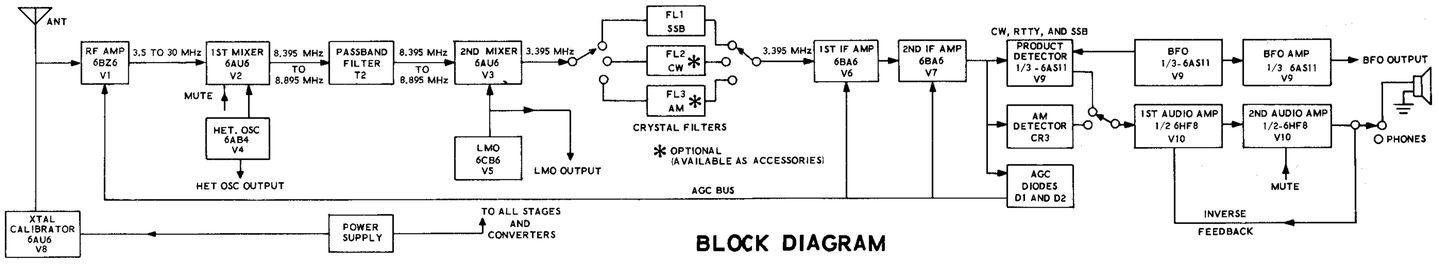

BLOCK DIAGRAM

HEATHKIT

HEATH COMPANY

Phone 616-983-3961 • TWX-616-983-3897 • Benton Harbor, Michigan 49022

January 6, 1969

Dear Customer:

Please make the following changes in your SB-301 Manual before you begin the assembly.

Page 5 - Under "Resistors - 1/2 Watt",

Change:	1-33	1	470 kΩ (yellow-violet-yellow)
To:	1-33	2	470 kΩ (yellow-violet-yellow)

Page 6 - Under "General",

Change:	85-153-1	1	IF circuit board
To:	85-153-3	1	IF circuit board (NOTE: The board you receive may still be marked 85-153-1).

Page 8 - Replace Pictorial 1-2 with the new Pictorial 1-2 supplied with this letter.

Page 93 - Replace Figure 7-2 with the new Figure 7-2 supplied with this letter.

Fold-out from Page 95 - Tape the section of the Schematic Diagram supplied with this letter over the same section on this fold-out.

Thank you,

HEATH COMPANY