Johnson

electronic equipment

VIKING VALIANT TRANSMITTER

E. F. Johnson Company

WASECA MINNESOTA

INTRODUCTION TO ASSEMBLY DETAILS

Component locations and terminal numbers are obtained from the line drawings and photos of the chassis at various stages of assembly. Component mounting feet or terminals referred to as "inside" are located nearest the center of the chassis, those referred to as "outside" are furthest from the center of the chassis. The individual terminals of terminal strips are not marked but for identification, are arbitrarily assigned consecutive numbers, the terminal nearest the center of the chassis being #1. Note that hardware sequence drawings give order of assembly and specify the size hardware to be used.

Individual socket contacts are numbered consecutively in a clockwise direction when looking at the bottom of the socket. Each contact has an identifying number molded into the socket body. Potentiometer terminals are unmarked but have been arbitrarily assigned consecutive numbers in a clockwise direction when viewed from the rear. Switch terminals are numbered consecutively in a clockwise direction when viewed from the front or shaft end.

Resistor and capacitor lead lengths are not generally given. These components, which are supported by their wire leads, have been positioned so as to provide short leads, good separation between leads and components to avoid the possibility of accidental grounds and shorts and good mechanical stability. Cut off excess lead lengths.

A number of operations in these instructions require that point to point connections be made using #20 plastic insulated hookup wire furnished with the kit. After cutting the lead to the specified length, strip 5/16" of insulation off <u>both ends</u> before attempting to install the lead.

The letter (S) appearing in the instructions means "solder", the letters (NS) "do not solder". When instructed to "tin" stranded leads, coat the ends lightly with solder to prevent breaking off loose strands and to make the leads easy to insert into terminals.

Read each operation thru and be sure it is understood before attempting to perform it. After completing each operation, check it off in the box ( ) provided. To save time and insure a neat job, make liberal use of all drawings and photographs furnished.

Drawings and photgraphs with letter designations appear at the end of these instructions. Illustrations designated by number appear in the Operating Manual for the Valiant. Hardware sequence drawings appear on the reverse side of this sheet.

V A L I A N T E R R A T A

OPERATION MANUAL - ASSEMBLY DETAILS

Operation Manual Changes

Page 9, para. C3 — "Voltage read at modulator grids should be -55 volts". Change to read "-35 volts".

"70 ma. static amplifier plate current on SSB". Change to read "50 ma. static".

Page 15, para. D3 — "Covered in section D5". Change to read "section D4".

Page 16, para. D6 — Under Typical Values change the following:

"Eg amplifier -82 volts" to read "-85 volts".
"Eg modulator -55 volts" to read "-46 volts".

Page 19, para. D10 — Under Typical Values -SSB Phone Operation - change:

"Amplifier cathode current (resting) 75 ma.", change to read "45-50 ma.".

Page 31 — Tube Socket Voltages Table 1
Change voltages as follows:

Tube Socket	Socket pin number 1	2	3	5	6	7	8
XV5				-85			
XV6				-85			
XV7				-85			
XV9			100				
XV10			100				
XV11			-210				-210
XV13	85	85		85	33	85	
XV14	160			160			

* Clipping control should be set at position 10

Page 32 — Resistance Measurements - Table 2

Change reading of pin 1, XV11 from "2500" to read "22K".

Parts List Changes

22.807	Delete C81, total now 3
22.827	Add C69, 102, 103, 104, Total now 40
22.836	Should read "2000 mmfd."
22.956	Delete C46, total now 3
22.1299	Should read "C93A, B"
22.1289	Change to part number 22.1373; value change to "5K, 25 watt".
71.91-102	Change to 8 feet
71.91-104	Change to 3 feet
71.13-125	Change to 45 feet

Continued on reverse side

Valiant Errata (continued)

Assembly Details Changes

Page 5, para. 10	Should read "...Figure I."
Page 21, para. 78	Should read "mount R22, 5K ohms ..."
Page 23, para. 115A(new)	Connect one lead of C73, .005 mfd disc ceramic capacitor to terminal 2 of TS13 (NS). Connect other end to ground terminal of TS13 (S).
Page 23, para. 115	Should read "....adjacent to terminal 4(NS)."
Page 25, para. N147	"R55" should read "R56".
Page 26, para. N169	"R56" should read "R55".
Page 31, para. 11	Should read "cut three..."
Page 32, para. 39	Should read "install the 1/8" 8-32 screws..."
Page 37, para. 10	C96 should be C103 and C97 should be C104
Page 39, para. V4	Change "read through section D3" to read "D2".
Page 39, para. V7	Change "D4" to read "D3".
Page 39, para. V8	Change "D5" to read "D4".
Page 39, para. V9	Change "D2" to read "D1".

ILLUSTRATIONS

A Bottom View of Chassis - Component Mounting
B SW2 VFO-Crystal-Zero Switch
C Temporary Mounting Leg
D Mounting Leg Chassis Attachment
E Top View of Chassis after Step B3
F Bottom View of Chassis - Harness Installation
G Auxiliary Power Receptacle Area
H SW3A Exciter Bandswitch and L16
I Top View of Chassis with Partial Component Mounting
J SW1 VFO Bandswitch
K SW3 Bandswitch-Exciter and Final Sections
L L6B Buffer Coil-High Frequency
M L6A Buffer Coil - Low Frequency
N SW5 Meter Switch
O L17 VFO Output Coil
P L5 Oscillator Coil Tuning Slug Assembly
Q L5 Oscillator Coil Terminals
R D1, D2, SW3 Cam Assembly
S RY1 Push-to-Talk Relay
T VFO Right, Front View
U VFO Coil
V Top View of Chassis after Step M55
X Front, Right Corner View of Audio Area
Y Final Amplifier Tube Socket Area
Z Final Amplifier Tube Socket Wiring

AA Top View of Completed Chassis Showing Tube Placement
AB Left, Front Corner View Showing Exciter, Rectifier and VR Tube Area
AC SSB Input Coaxial Cable Assembly
AD SW4 Mode Switch
AE C42 Output Loading Capacitor Mounting and Wiring
AF SW6 Output Coupling Switch
AG C38 and C39 Assembly
AH VFO Trimmer Shaft Assembly
AI VFO Right Front View after Step T12,e
AJ VFO Left, Front View after Step T18
AK Bottom View of Chassis after Step T19
AL Front Panel, Inside, after step V3
AM Insertion of Shield Braid in Front Panel
AN Front Panel - Dial Pointer and Escutcheon Mounting
AO Pilot Light Socket Assembly
AP Escutcheon Light Block and Jewel Assembly
AQ Cabinet, Guide Rail and Foot Assembly
AR VFO Chassis, Top View
AS VFO Chassis, Bottom View

VIKING VALIANT ASSEMBLY DETAILS

CONTENTS

		Page
A.	Socket, Terminal Strip and Small Parts Mounting	1
B.	Mounting Bracket Attachment and Auxiliary Power Socket Wiring	3
C.	VFO Switch, Bandswitch, Exciter Coil Mounting	4
D.	Socket Grounding and Shield Connections	5
E.	Point-to-Point Socket and Terminal Connections	6
F.	L5, L6A, L6B and SW3 (Bandswitch) Wiring	6
G.		6
H.		7
I.	Electrolytic Capacitor (C93, C98) Wiring	8
J.	Wiring Harness Installation	8
K.	SW1 and SW5 Wiring	13
L.	Lead-Supported Component (Resistors, Disc Capacitors) Installation	13
M.	VFO Assembly, Mounting and Connections	14
N.	Audio Circuit, Exciter and Keyer Wiring T2 (S)	18
O.	Final Amplifier Area - Component Mounting and Wiring	27
P.	High Voltage Plate Transformer and Choke Mounting T1	29
Q.	SSB Coaxial Input Cable	30
R.	Modulator Wiring - Final Amplifier Tank Circuit Wiring	30
S.	Preliminary Tests	33
T.	Preliminary VFO Tests	34
U.	Front Panel Preparation and Mounting	36
V.	Final Adjustment and Checkout	38
W.	Cabinet Assembly	39

VIKING VALIANT

Assembly Details

A. Socket, terminal strip and small parts attachment. Refer to Figure A, an unfolded view of the inside of the chassis, and the Hardware Sequence Chart. Mount parts in the order listed. Use the hardware described in the appropriate hardware sequence and in the order shown. Orient parts as shown in Figure A.

1. ( ) Mount TS1, 6 terminal strip, using hardware sequence C.
2. ( ) Mount XV10, octal socket, use hardware sequence B inside, A outside.
3. ( ) Mount XV9, octal socket, use hardware sequence A inside, B outside.
4. ( ) Mount XV3, 9 pin miniature socket, use hardware sequence E.
5. ( ) Mount XV11, 9 pin miniature socket, use hardware sequence E.
6. ( ) Mount TS6, 8 terminal strip, use hardware sequence C.
7. ( ) Mount XV18, 4 pin socket, use hardware sequence C.
8. ( ) Mount TS8, 3 terminal strip, use hardware sequence C.
9. ( ) Mount XV4, 9 pin miniature socket, use hardware sequence E.
10. ( ) Mount TS10, 6 terminal strip, use hardware sequence A outside, do not fasten inside mounting foot.
11. ( ) Mount XV19, 4 pin socket, use hardware sequence C.
12. ( ) Mount TS12, 7 terminal strip, sequence A outside, sequence B inside.
13. ( ) Mount TS13, 4 terminal strip, sequence A outside, sequence B inside.
14. ( ) Mount XV8, 7 pin miniature socket, use sequence E.
15. ( ) Mount TS15, 3 terminal strip, use hardware sequence A.
16. ( ) Mount TS16, 3 terminal strip, use hardware sequence A.
17. ( ) Mount TS17, 3 terminal strip, use hardware sequence C.
18. ( ) Mount TS18, 4 terminal strip, use hardware sequence C.
19. ( ) Mount TS19, 2 terminal strip, use hardware sequence C.
20. ( ) Mount XV12, 9 pin miniature socket, sequence D outside, E inside.
21. ( ) Mount XV13, 7 pin miniature socket, use hardware sequence D.
22. ( ) Mount TS20, 11 terminal strip, use hardware sequence A.
23. ( ) Mount XV15, 9 pin miniature socket, use hardware sequence B. → E?
24. ( ) Mount XV14, 7 pin miniature socket, hardware sequence D.
25. ( ) Mount TS25, 6 terminal strip, hardware sequence C.

7-56

A. 26. ( ) Mount XV16, octal socket, hardware sequence A outside, B inside.

27. ( ) Mount TS27, 3 terminal strip, hardware sequence C.

28. ( ) Mount XV20, octal socket, hardware sequence C.

29. ( ) Mount XV17, octal socket, hardware sequence A outside, B inside.

30. ( ) Mount XV21, octal socket, hardware sequence B inside, A outside.

31. ( ) Mount TS32, 3 terminal strip, hardware sequence A inside, B outside.

32. ( ) Mount TS33, 4 terminal strip hardware sequence C.

33. ( ) Mount relay jack J4 with a 3/8" 4-40 screw, secure with a #4 shakeproof washer and nut.

34. ( ) Mount coaxial connector J6 inside the chassis using hardware sequence F.

35. ( ) Mount the phone patch input jack J3 inside the chassis with the solder terminal toward the chassis lip, use hardware sequence C.

36. ( ) Mount the microphone connector J1 outside the chassis securing with the lock-washer and nut furnished, terminal 2 toward the outside.

37. ( ) Mount the key jack J2 inside the chassis with its own hardware, the ground lug toward the chassis lip.

38. ( ) Mount the audio control R28, 1 meg. potentiometer (marked 22.1195), inside the chassis, hardware sequence G.

39. ( ) Mount the keyer control, R39, 100K ohm potentiometer (marked 22.1115) inside the chassis, hardware sequence G.

40. ( ) Mount the clamper control R13, 1 meg. potentiometer (marked 22.832), inside the chassis, hardware sequence G.

41. ( ) Install the nine 9/16" grommets G1-9 as shown in Figure A.

42. ( ) Install the 11/32" grommet G10 as shown in Figure A.

43. ( ) Mount the two SPST toggle switches SW7 and SW8 inside the chassis and orient as shown in Figure A. Use the pair of hex nuts furnished with each switch to adjust switch positions so that 3/16" to 1/4" of switch shanks protrude thru the front mounting nuts. Replace the knurled nuts on the switches to avoid losing them.

44. ( ) Identify switch SW2 from Figure B, orient and mount inside the chassis as shown on Figure A. Use hardware sequence G.

45. ( ) Mount XV5, octal socket, hardware sequence A inside, B outside.

46. ( ) Mount XV6, octal socket, hardware sequence A inside, B outside.

47. ( ) Mount XV7, octal socket, hardware sequence A inside, B outside.

48. ( ) Mount J7, the octal socket with elongated mounting slots as shown on Figure A. Attach 1 3/8" x 1/4" round spacers loosely to the top side of the octal socket mounting plate with 1/4" 6-32 binding head screws and shakeproof washers. Hold the socket in position and attach the other ends of the spacer rods to the inside

A. 48. of the chassis with 1/4" 6-32 binding head screws and shakeproof washers. Center the socket on the 1 1/2" chassis hole and tighten all screws securely.

49. ( ) Mount fuse holder FH1 using 1/4" 6-32 binding head screw and 6-32 nut.

50. ( ) Mount TS48, 7 terminal strip on top of the chassis. Thru each mounting foot pass a 1/4" 6-32 binding head screw, under the mounting foot place a #6 solder terminal and #6 shakeproof washer in that order, secure with 6-32 nuts underneath the chassis.

B. 1. ( ) Make four temporary legs per the sketch, Figure C, from any conveniently available wood stock.

2. ( ) Attach legs to the chassis as shown in the sketch, Figure D, using 3/4" 10-32 screws. Put nuts on the inside of the chassis.

3. ( ) Mount the brackets BKT1 thru BKT5 to the top of the chassis in positions shown in Figure E. Use 3/8" 8-32 screws, secure with #8 shakeproof washers and 8-32 nuts underneath the chassis. Brackets should be flush with the front edge of the chassis.

4. ( ) Mount the bracket BKT6 underneath the chassis as shown in Figure A. Use a 3/8" 8-32 screw, secure with a #8 shakeproof washer and 8-32 nut underneath the chassis.

5. ( ) Mount C93, dual 15 mfd. 350 WVDC electrolytic capacitor with separate negatives in the position shown in Figure F. Install with hardware in this order: 1/4" 6-32 binding head screw, chassis, #6 shakeproof washer, capacitor mounting strap, #6 solder lug, 6-32 nut.

6. ( ) Locate the 9 pin socket (similar to octal socket) J8. Cut off all the terminals between the holes, thus shortening the terminals but leaving intact one hole in each terminal. Cut 8 pieces of #16 bare hookup wire 15/16" long. Form an 1/8" hook on one end of each wire. Except for pin #9, hook, crimp and solder the short pieces of wire to the socket pins, the wires extending directly away from the pins. Cut a 2" piece of wire, hook, crimp and solder to pin #9.

7. ( ) Mount J8 outside the chassis and its shield SH6 inside the chassis as shown in Figure G with pin 3 of J8 nearest the bottom edge of the chassis. Pass the wires thru the shield holes which cause the least bending of the leads as SH6 is brought into position. Secure J8 and SH6 with 3/8" binding head 6-32 screws passing thru the chassis from outside. Install a #6 shakeproof washer between SH6 and the chassis at each screw. Secure with 6-32 nuts, a #6 solder terminal under the nut nearest the top of the chassis, three #6 solder terminals under the nut nearest the bottom edge of the chassis.

8. ( ) Connect the lead from pin 9 to the ground solder lug nearest the underside of the chassis top (NS).

9. ( ) Cut eight 7/16" lengths of the .051" ID varnished tubing and push a piece over each of the remaining leads of J8, thus insulating the leads from the shield SH6. Next cut eight pieces, 7/16" lengths of .106" ID extruded tubing, slide one over each of the lengths previously installed making two thicknesses of insulation over the leads.

10. ( ) Connect the by-pass capacitors to the auxiliary socket J8, making connections to the socket lead extensions by looping the capacitor leads around the extensions near the varnished tubing and soldering lightly to hold the leads in position. Maintain 1/16" of clearance between the capacitor bodies and the shield SH6.

B. 10. a. ( ) Connect C54, .002 mfd. 1500V disc ceramic, between pin 1 of J8 (S) and the closest solder lug near the bottom edge of the chassis. (NS).

b. ( ) Connect C55, .002 mfd. 1500V disc ceramic, between pin 2 of J8 (S) and the same solder lug used in (a) preceeding. (NS).

c. ( ) Connect C56, .002 mfd. 1500V disc ceramic, between pin 3 of J8 (S) and the same solder lug in preceeding steps (S).

d. ( ) Connect C57, .005 mfd. 600V disc ceramic between pin 4 of J8 (S) and the remaining open solder lug near the bottom edge of the chassis. (NS).

e. ( ) Connect C58, .005 mfd. 600V ceramic disc, between pin 5 of J8 (S) and the solder lug near the bottom edge of the chassis. (NS).

f. ( ) Connect C59, .005 mfd. 600V disc ceramic, between pin 6 of J8 (S) and the solder lug near the bottom edge of the chassis (S).

g. ( ) Connect C60, .005 mfd. 600V disc ceramic, between pin 7 of J8 (S) and the solder lug nearest the top of the chassis (NS).

h. ( ) Connect C61, .005 mfd. 600V disc ceramic, between pin 8 of J8 (S) and the solder lug nearest the top of the chassis (S).

C. 1. ( ) Mount SW1, the VFO bandswitch on top of the chassis as shown in Figure I. This switch can be identified from the sketch J. The switch is viewed from the rear and shown in the counterclockwise position. Use hardware sequence G.

2. ( ) Mount R16, 12K ohms 50 watt resistor, on top of the chassis as shown in Figure I. Use 1/4" 6-32 binding head screws, secure with #6 shakeproof washers and 6-32 nuts underneath the chassis.

3. ( ) Mount C98, dual 15 mfd. 450DCWV electrolytic capacitor as shown in Figure F. Install with hardware in this order: 1/4" 6-32 binding head screw, chassis, #6 shakeproof washer, capacitor mounting strap, #6 solder lug, 6-32 nut.

4. ( ) Make L16 by winding 11 turns of #18 formex wire on the wood dowel furnished. Strip insulation from the ends. Connect between terminals 11 (NS) and 12 (S) of SW3A in the position shown in Figure H. The coil should be about 1/8" in front of the switch deck.

5. ( ) Mount the bandswitch SW3 as shown in Figure K as follows: Place the following hardware over the switch shaft in this order, 3/8" shakeproof washer, BKT7 the L bracket, 3/8-32 hex nut, VFO bandswitch drive are D1 (with the 1/8" pegs toward the switch wafer), D22 a 3/8" panel bearing with the hex end toward the switch wafer, a 3/8" shakeproof washer. Push the threaded bushing into the appropriate front chassis hole and secure with a 3/8"-32 nut. Hold the switch and brackets in position as shown in Figure F, secure the brackets in position as shown in Figure F, secure the brackets to the chassis using hardware sequence C. Secure the front bracket to the switch bushing with the 3/8"-32 nut.

6. ( ) Mount the high frequency buffer coil L6B as shown in Figure F. Form the #14 lead to allow it to pass thru and clear the 7/16" hole at the rear of L6B. Secure at each insulator with a 1/4" 6-32 binding head screw and a #6 shake-proof washer. Identify from Figure L.

7. ( ) Mount the buffer variable capacitor C7 (marked 149-3-3) in the position shown in Figure I. Use the following hardware sequence: 1/4" 6-32 binding head screw, #6 shakeproof washer, chassis, two #8 flat washers, capacitor mounting foot. The rear screw passes thru the mounting foot of terminal board TS10.

8. ( ) Mount the meter switch SW5 as shown in Figure I. Identify the switch from sketch N. Use hardware sequence G.

9. ( ) Mount R51,25K ohms 4 Watt drive control (marked 22.732) as shown in Figure I. Use hardware sequence G.

C. 10. ( ) Mount R34, 100K ohms 2 watt potentiometer (marked 22.1290) clipping level control as shown in Figure ~~F~~ I. Use hardware sequence G.

11. ( ) Mount the adjustable VFO output coil L17, in position shown in Figure I. Push the coil hard into the chassis hole until the fastener tabs snap out on top of the chassis, holding the coil in place. See sketch O. contradicts ?

12. ( ) Make up the 3/8" coil fastener and core assembly as shown in sketch P. Push the core, consisting of four nuts, see sketch Q, into the oscillator coil L5 as far as possible. Orient the coil so the terminals project as shown in Figure F and push the coil fastener hard into the chassis hole until the fastener tabs snap out on top of the chassis holding the coil in place.

13. ( ) Install the VFO switch cam D2 and driver arm D1 as directed in the following steps

Attach and tighten the 1 5/8" dial knob to the shaft of SW3 with a 3/16" #10 set screw. Push the VFO bandswitch drive arm D1 out of the way toward the front of the chassis. With pliers, turn the VFO bandswitch SW1 to the middle position (40 meter). Turn SW3 to the counterclockwise postion then advance two steps clockwise, to the 40 meter position (viewed from the front of the switch). Attach the drive cam D2 to the end of the VFO switch shaft with a 3/16" 10-32 set screw in the position shown in Figure R. Tighten the set screw sufficiently so that SW1 can be turned. Start two 3/16" #8 set screws in the hub of D1, turn D1 so the pins are on the chassis side of the shaft, push D1 toward D2 until the nearest edge of D1 is just 5/16" from the nearest edge of D2. Rotate D1 counterclockwise (viewed from the front) until the left drive arm pin moves downward against the middle incline of D2. Back off so that the pin clears the decline by 1/16" to 1/32" and tighten the set screws of D1 to hold it securely in position. Turn SW3 again to the counterclockwise position (viewed from the front) and SW1 to the most counterclockwise position (viewed looking into the bottom of the chassis).

14. ( ) Test SW3 and SW1 action by turning the SW3 knob clockwise. As SW3 is turned from the counterclockwise position, the bandswitch positions progress from 160 to 80, 40, 20, 15, 10, 11 meters. The VFO switch should turn 30 degrees between the 80 and 40 meter positions and between the 10 and 11 meter positions as the bandswitch is turned in either direction. Make necessary minor adjustments for good action and set the screws in place by loosening them slightly and re-tightening them very tightly. Figure R shows D1 and D2 in their normal positions with SW3 set to 40 meters. Although not necessary, a slight film of petroleum jelly or similar lubricant will help to reduce friction.

15. ( ) Mount RY1, DPDT relay, on the edge of the chassis beneath socket XV19. Turn the relay with terminals toward the edge of the chassis, mount with a 3/8" 6-32 binding head screw and #6 shakeproof washer.

D. Using #20 tinned wire, obtained by stripping the black hookup wire, make the following connections referring to Figure A.

1. ( ) Connect pin 5 of XV15 (S), to the socket center shield (S), to pin 4 (NS), to ground lug of socket near pin 4 (S).

2. ( ) Connect pin 3 of socket XV14 (NS) to ground lug (S).

3. ( ) Connect pin 3 of socket XV13 (S) to ground lug (S).

4. ( ) Connect pin 5 of socket XV12 (S), to the socket center shield (S), to pin 4 (NS) to ground lug of socket near pin 4 (S).

5. ( ) Connect pin 3 of socket XV12 (S) to pin 4 (S).

D. 6. ( ) Connect pin 2 of socket XV9 (NS) to ground lug of XV9 (S).

7. ( ) Connect nearest ground lug of socket XV3 (S) to pin 5 (NS) to center shield (S) to pin 7 (S).

8. ( ) Connect nearest ground lug of socket XV11 (NS), to pin 4 (NS), to center shield (S) to pin 5 (NS).

9. ( ) Connect pin 7 of XV21 (S) to ground lug under XV21 (NS).

10. ( ) Connect nearest ground lug of socket XV4 (NS), to pin 3 (NS), to center shield (S) to pin 5 (NS).

11. ( ) Connect center shield of socket XV8 (S) to pin 3 (NS) to ground lug of TS13 (NS).

E. Using #20 green hookup wire, make the following point to point connections. Strip each end of the wire 5/16".

1. ( ) Connect a 3" lead from pin 4 of XV14 (NS) to pin 9 of XV15 (S).

2. ( ) Connect a 4 5/8" lead from pin 4 of XV14 (NS) to pin 4 of XV13 (NS).

3. ( ) Connect a 2 1/2" lead from pin 4 of XV13 (S) to pin 9 of XV12 (NS).

4. ( ) Connect a 5" lead from pin 4 of XV4 (NS) to pin 9 of XV11 (NS).

5. ( ) Connect a 3 3/8" lead from pin 9 of XV11 (S) to terminal 2 of TS6 (NS).

6. ( ) Connect a 4 1/4" lead from terminal 2 of TS6 (NS) to pin 4 of XV3 (NS).

7. ( ) Connect a 4 3/4" lead from pin 4 of XV8 (NS) to pin 2 of XV7 (NS).

8. ( ) Connect a 3 1/2" lead from pin 2 of XV7 (NS) to pin 2 of XV5 (NS).

9. ( ) Connect a 3" lead from pin 2 of XV5 (S) to pin 2 of XV6 (NS).

10. ( ) Connect a 6" lead from pin 2 of XV6 (S) to pin 4 of XV4 (NS).

F. Using #20 blue hookup wire make the following point to point connections.

1. ( ) Connect a 3 1/4" lead from pin 1 of XV11 (NS) to terminal 1 of TS6 (NS).

2. ( ) Connect a 4 1/2" lead from pin 6 of XV3 (S) to terminal 1 of L5 (NS). (Terminal 1 is the terminal of L5 nearest the chassis.) Connect R12, 33K ohms 1/2 watt resistor between terminal 1 of L5 (NS) and terminal 3 of L5 (NS).

3. ( ) Connect a 2" lead from pin 1 of XV4 (NS) to terminal 3 (furthest from the center of the chassis) of L6B (NS).

G. Using #20 red hookup wire make the following point to point connections.

1. ( ) Connect a 15 1/2" lead to pin 6 of XV4 (NS), route as follows. Route toward the front wafer of SW3, bend at right angles close beside TS6 on the side toward XV3 to the front edge of the chassis, bend at right angles to grommet G2, thru G2 to terminal 2 (center terminal) of R51 (S).

2. ( ) Connect a 7 1/2" lead from terminal 3 of TS10 (NS) route along the chassis to terminal 7 of SW3A (NS).

G. 3. ( ) Connect a 5 1/2" lead from terminal 2 of L5 (second terminal from the chassis) (S) route down to the chassis thence toward the rear, make a right angle bend directly opposite SW3A, thence to terminal 11 of SW3A (S).

4. ( ) Connect an 8 1/2" lead from terminal 7 of TS6 (NS) route directly to terminal 11 of SW2 (S).

5. ( ) Connect a 4 1/2" lead from pin 2 of XV10 (S), route between sockets to pin 5 of XV9 (S).

6. ( ) Connect a 4" lead from pin 7 of XV10 (S) to pin 7 of XV9 (S).

H. Using #20 yellow hookup wire, make the following connections.

1. ( ) Connect a 6 1/2" lead from terminal 3 (terminal furthest from the chassis) of L5, route down to the chassis, thence toward the rear, make a right angle bend opposite SW3A, thence to terminal 9 of SW3A (NS).

2. ( ) Connect a 6 1/4" lead from terminal 8 of TS6 (NS) directly to terminal 5 and 6 of SW2 (S).

3. ( ) Identify the low frequency buffer coil L6A from Figure M. Attach the mounting screws using the following hardware sequence. 1 3/8" 6-32 round head screw, #6 spade lug, 7/16" OD fiber shoulder washer with the shoulder toward the coil form. Insert screw from the terminal side, next install a fiber shoulder washer, #6 spade lug, a #6 shakeproof washer and a 6-32 hex nut. Tighten securely, taking care not to break the coil form.

4. ( ) Connect #20 plastic hookup wire leads to the taps of L6A as follows:

   a. ( ) Green, 4 1/2" to terminal 1 of L6A (bottom terminal) (S). Train this lead and the following leads directly toward the spade lug end of L6A.
   b. ( ) Red, 4" to terminal 2 of L6A (S).
   c. ( ) Yellow, 3 3/4" to terminal 3 of L6A (S).
   d. ( ) Blue, 3 3/4" to terminal 4 of L6A (S).
   e. ( ) Black, 5" to terminal 5 (top terminal) of L6A (NS).

5. ( ) Mount L6A on top of the chassis as shown in Figure I. Place the leads thru the grommet G9 while putting the coil in position and train the leads toward the rear terminals of the front bandswitch wafer SW3A.

Place a #6 solder lug under rear spade lug, use #6 shakeproof washer between chassis & lug.

6. ( ) Connect the leads from L6A to the front wafer (SW3A) of the bandswitch as follows:

   a. ( ) Black to terminal 1 of SW3A (NS).
   b. ( ) Blue to terminal 2 of SW3A (S).
   c. ( ) Yellow to terminal 3 of SW3A (S).
   d. ( ) Red to terminal 4 of SW3A (S).
   e. ( ) Green to terminal 5 of SW3A (NS).

   NOTE: These leads should be trained along the chassis away from L6B, then upward along the edge of the ceramic wafer.

7. ( ) Connect terminal 1 of L6B, HF buffer coil, to terminal 5 of SW3A (S).

8. ( ) Connect terminal 2, the center tap of L6B, to terminal 6 of SW3A (S).

9. ( ) Connect a 3" black lead from terminal 1 of R51 (S) thru grommet G2 to the ground lug on XV12 (NS).

10. ( ) Connect a 4 1/2" black lead from terminal 1 of R28 (S) to the ground lug of XV15 (NS).

H. 11. ( ) Connect a 3 1/4" black lead from terminal 7 of SW5, thru grommet G1, to ground lug of XV10 (NS).

12. ( ) Connect a 3 3/4" black lead from terminal 12 of SW2 (S) to ground lug of XV10 (NS).

13. ( ) Connect a 1 3/4" black lead from terminal 7 of XV16 (S) to ground lug of XV16 (S).

14. ( ) Connect a 1 3/4" black lead from terminal 7 of XV17 (S) to ground lug of XV17 (S).

15. ( ) Connect a 7" orange lead from terminal 9 of SW2 (NS), thru grommet G1, to terminal 1 of SW5 (S).

16. ( ) Connect a 7 1/4" orange lead from terminal 9 of SW2 (S) to pin 4 of J7, (NS). Route as shown in Fig. AB.

I. 1. ( ) Connect the black lead from C98 to the ground lug under its mounting strap (S).

2. ( ) Connect the red lead of C98 to pin 3 of XV20 (NS).

3. ( ) Connect the green lead of C98 to pin 8 of XV20 (NS).

4. ( ) Connect the red lead and the red lead with tracer of C93 to the ground lug under its mounting strap (S).

5. ( ) Connect the black lead of C93 to pin 6 of XV21 (NS).

6. ( ) Connect the black-yellow lead of C93 to pin 4 of XV21.

7. ( ) Connect a 12" length of blue hookup wire from terminal 3 of TS6 (NS) to terminal 8 of SW2 (S).

8. ( ) Connect a 10" black lead from terminal 2 of SW2 (S), route along the edge of the chassis near the lip, to pin 1 of J7 (S). (Fig. AB.)

9. ( ) Connect a 10 1/2" black lead from pin 3 of J7, route as in previous step, to terminal 1 of SW2 (S).

10. ( ) By the most direct route, connect a 5 1/4" black lead from terminal 4 of SW2 (NS to pin 9 of XV3 (NS).

J. Place the wiring harness in position as shown in Figure F. Connect the leads as follows, referring to Figure A and I. Pass leads 66A (green), 67A (black), 68A white, thru the grommet G2. Refer to Figure A and Figure 10.

1. ( ) 5A black to ground lug on XV12 (NS).

2. ( ) 1A shielded center conductor to pin 2 of XV12 (NS), shield on ground ear of XV12 adjacent to pin 1 (NS).

3. ( ) 2A shielded center conductor to pin 8 of XV12 (NS), shield on ground ear of XV12 adjacent to pin 8 (NS).

4. ( ) 3A shielded (marked blue) center conductor to terminal 3 of TS20 (NS) shield to ground ear of XV12 adjacent to pin 1 (S).

5. ( ) 4A shielded (marked red) center conductor to pin 7 of XV12 (S), shield to ground ear of XV12 adjacent to pin 8 (S).

J. 6. ( ) 66B green to pin 9 of XV12 (S).

7. ( ) 6B white thru grommet G2 to terminal 3 of R51 (S).

8. ( ) 6A white to terminal 7 of TS20 (NS).

9. ( ) 7A red to terminal 7 of TS20 (NS).

10. ( ) 8A red to terminal 7 of TS20 (NS).

11. ( ) 9A gray to pin 6 of XV13 (NS).

12. ( ) 5B black to terminal 1 of R28 (NS), connect shields of 3B and 4B to terminal 1 of R28 (S).

13. ( ) 3B shielded (marked blue) center conductor to terminal 3 of R28 (S).

14. ( ) 4B shielded (marked red) center conductor to terminal 2 of R28 (S).

15. ( ) 7B red thru grommet G3 to terminal 3 of R34 (S).

16. ( ) 9B grey thru grommet G3 to terminal 2 of R34 (S).

17. ( ) 10A white to terminal 1 of SW8 (S).

18. ( ) 11A black to terminal 2 of SW8 (S).

19. ( ) 11B black to pin 4 of XV15 (S).

20. ( ) 13A green to pin 4 of XV14 (S).

21. ( ) 12A gray to pin 1 of XV16 (S).

22. ( ) 21A brown to terminal 2 of TS27 (NS).

23. ( ) 13B green to pin 2 of XV16 (NS).

24. ( ) 14A green to pin 2 of XV16 (S).

25. ( ) 15A red to pin 3 of XV16 (S).

26. ( ) 16A violet to terminal 6 of TS25 (NS).

27. ( ) 17A gray to terminal 5 of TS25 (NS).

28. ( ) 18A yellow to terminal 4 of TS25 (NS).

29. ( ) 8B red to pin 3 of XV20 (NS).

30. ( ) 31A red to pin 3 of XV20 (NS).

31. ( ) 12B gray to pin 1 of XV17 (NS).

32. ( ) 41A yellow to pin 1 of XV17 (NS).

33. ( ) 40A white to pin 8 of XV17 (NS).

34. ( ) 19A white to pin 6 of XV21 (NS).

J. 35. ( ) 14B green to pin 2 of XV17 (NS).

36. ( ) 20A green to pin 2 of XV17 (S).

37. ( ) 15B red to pin 3 of XV17 (NS).

38. ( ) 61A red to pin 3 of XV17 (NS).

39. ( ) 20B green to pin 2 of XV21 (NS).

40. ( ) 23A green to pin 2 of XV21 (S).

41. ( ) 1B shielded center conductor to terminal 1 of TS32 (NS). Shield to ground lug on TS32.

42. ( ) 25A orange to terminal 3 of TS32 (NS).

43. ( ) 2B shielded center conductor to insulated terminal of J3 (S), shield to ground lug (S).

44. ( ) 10B white to terminal 2 of J1 (NS). Do not cut off this lead nor 24A (white) even though them seem too long.

45. ( ) 24A white to terminal 2 of J1 (NS).

46. ( ) 27A green to terminal 1 of TS33 (NS).

47. ( ) 17B gray to terminal 2 of TS33 (NS).

48. ( ) 18B yellow to terminal 3 of TS33 (NS).

49. ( ) 26A yellow to terminal 3 of TS33 (NS).

50. ( ) 16B violet to terminal 4 of TS33 (NS).

51. ( ) 33A brown to terminal 1 of TS19 (NS).

52. ( ) 34A brown to terminal 2 of TS19 (NS).

53. ( ) 23B green to terminal 1 of TS18 (NS).

54. ( ) 28A blue to terminal 2 of TS18 (NS).

55. ( ) 29A violet to terminal 3 of TS18 (NS).

56. ( ) 30A violet to terminal 3 of TS18 (NS).

57. ( ) 31B red to terminal 4 of TS18 (NS).

58. ( ) 32A red to terminal 4 of TS18 (NS).

59. ( ) 35A blue-wh-orange to terminal 3 of TS17 (NS).

60. ( ) 49A blue-wh-orange to terminal 3 of TS17 (NS).

61. ( ) 36A black to terminal 2 of FH1 (S).

62. ( ) 67B black to terminal 1 of TS17 (NS).

J. 63. ( ) 69A black to terminal 1 of TS17 (NS).

64. ( ) 68B white to terminal 2 of TS17 (NS).

65. ( ) 22B gray to terminal 4 of TS13 (NS).

66. ( ) 38A gray to terminal 4 of TS13 (NS).

67. ( ) 27B green to pin 4 of XV8 (NS).

68. ( ) 37A red to terminal 1 of TS13 (NS).

69. ( ) 39A blue to terminal 2 of TS13 (NS).

70. ( ) 43A orange-blue to pins 5 & 6 of XV8 (S), pin 5 only.

71. ( ) 40B white to pin 2 of XV8 (NS).

72. ( ) 42A white to pin 2 of XV8 (S).

73. ( ) 42B white to terminal 7 of TS12 (NS).

74. ( ) 45A black-brown to terminal 7 of TS12 (NS).

75. ( ) 46A black to terminal 6 of TS12 (NS).

76. ( ) 28B blue to terminal 5 of TS12 (NS).

77. ( ) 47A blue to terminal 5 of TS12 (NS).

78. ( ) 37B red to terminal 1 of TS12 (NS).

79. ( ) 48A red to terminal 1 of TS12 (NS).

80. ( ) 33B brown to pin 1 of XV19 (NS).

81. ( ) 51A brown-white to pin 1 of XV19 (S).

82. ( ) 34B brown to pin 4 of XV19 (NS).

83. ( ) 52A brown-white to pin 4 of XV19 (S).

84. ( ) 46B black to pin 3 of XV19 (NS).

Connect harness leads to relay RY-1 as follows: See sketch S

85. ( ) 24B white to terminal 6 (coil) (S).

86. ( ) 49B blue-white-orange to terminal 4 (S).

87. ( ) 69B black to terminal 2 (NS).

88. ( ) 50A brown-white to terminal 5 (S).

89. ( ) 53A blue-yellow to terminal 3 (S).

90. ( ) 54A black to terminal 1 (S).

91. ( ) 54B black to ground lug on TS10 (NS).

J.•92. ( ) 62A black to terminal 3 of TS8 (NS).

•93. ( ) 55A orange to terminal 5 of TS10 (NS).

•94. ( ) 32B red to terminal 1 of TS10 (NS).

•95. ( ) 58A red to terminal 1 of TS10 (NS).

•96. ( ) 57A blue-yellow to pin 7 of XV4 (NS).

•97. ( ) 47B blue to pin 2 of XV18 (NS).

•98. ( ) 51B brown-white to pin 1 of XV18 (S).

•99. ( ) 52B brown-white to pin 4 of XV18 (S).

•100. ( ) 48B red to pin 3 of XV18 (NS).

•101. ( ) 50B brown-white to pin 3 of XV9 (S).

•102. ( ) 55B orange to pin 7 of XV11 (NS).

•103. ( ) 65A blue to pin 7 of XV11 (NS).

•104. ( ) 58B red to pin 6 of XV11 (NS).

•105. ( ) 59A red to pin 6 of XV11 (NS).

•106. ( ) 19B white to terminal 3 of R39 (NS).

•107. ( ) 60A gray to pin 5 of XV10 (S).

•108. ( ) 59B red to terminal 6 of TS1 (NS).

•109. ( ) 38B gray thru grommet G1 to terminal 3 of SW5 (S). See sketch N.

•110. ( ) 39B blue thru grommet G1 to terminal 9 of SW5 (S).

•111. ( ) 41B yellow thru grommet G1 to terminal 5 of SW5 (S).

•112. ( ) 45B black-brown to terminal 10 of SW5, connect jumper between terminals 10 and 11 of SW5 (S).

•113. ( ) 57B blue-yellow thru grommet G1 to terminal 2 of SW5 (S).

•114. ( ) 63B white thru grommet G1 to terminal 8 of SW5 (S).

•115. ( ) 63A white to pin 2 of XV4 (NS).

•116. ( ) 30B violet thru grommet G8 to terminal 1 of R16 (NS).

•117. ( ) 64A violet thru grommet G8 to terminal 1 of R16 (S).

•118. ( ) 56A blue-white-orange thru grommet G8 to terminal 2 of R16.

•119. ( ) 36B black to terminal 1 of SW7 (S).

•120. ( ) 35B blue-white-orange to terminal 2 of SW7 (S).

K. 1. ( ) Using #20 bare wire obtained by stripping black plastic wire, connect terminal 4 of SW5 (S) to terminal 7 of SW5 (S).

Using #20 plastic insulated hookup wire, make the following connections:

2. ( ) Connect a 3" green lead from terminal 5 of TS6 (NS), thru grommet G4, to terminal 4 of ~~TS38~~ TS48 (NS).

3. ( ) Connect a 2 1/2" yellow lead from terminal 6 of TS6 (NS) thru grommet G4, to terminal 1 of L17 (NS).

4. ( ) Connect a 3 1/4" black lead from terminal 7 of ~~TS38~~ TS48 (NS) thru grommet G4 to terminal 4 of TS6 (NS).

5. ( ) Connect a 4 1/2" orange lead from terminal 1 of ~~TS38~~ TS48 (NS) thru G4 to terminal 1 of TS6 (S).

6. ( ) Connect a 7" red lead from terminal 6 of ~~TS38~~ TS48 (NS) thru grommet G4 to pin 6 of XV11 (NS).

7. ( ) Connect a 3 3/4" black lead from terminal 6 of SW1 (S) to terminal 3 of ~~TS38~~ TS48 (NS).

8. ( ) Connect a 3 1/4" black lead from terminal 5 of ~~TS38~~ TS48 (NS) to terminal 10 of SW1 (NS).

9. ( ) Connect a 1" black lead from terminal 10 of SW1 (NS) to terminal 8 of SW1 (NS).

10. ( ) Connect a 3 1/4" blue lead from terminal 9 of SW1 (NS) to terminal 2 of L17 (NS).

The following components are supported by their wire leads. Cut all leads as short as practical without putting strain on lugs and terminals. Do not depend on the insulation of the components, particularly ceramic disc capacitors. Instead, separate components from each other and from contact with the chassis.

L. 1. ( ) Connect one lead of C20, .005 mfd. ceramic disc capacitor, to terminal 7 of TS~~38~~ 48 (NS), the other lead to the outside ground lug of TS~~38~~ 48 (NS).

2. ( ) Connect one lead of C21, .005 mfd. ceramic disc capacitor, to terminal 4 of TS~~38~~ 48 (NS), the other lead to the inside ground lug of TS~~38~~ 48 (NS).

3. ( ) Connect one lead of C26, .005 mfd. ceramic disc capacitor to terminal 5 of TS~~38~~ 48 (NS), the other lead to the outside ground lug of TS~~38~~ 48 (NS).

4. ( ) Connect R5, 470 ohms 1/2 watt, between terminals 5 (S) and 6 (NS) of TS~~38~~ 48.

5. ( ) Connect one lead of L3, 2.4 MH 3 pi RF choke, to terminal 3 of TS~~38~~ 48 (NS), the other lead to terminal 7 of TS~~38~~ 48 (S).

6. ( ) Connect R4, 1.5 K ohms 1 watt, between terminal 10 of SW1 (NS) and terminal 2 of TS~~38~~ 48 (NS).

7. ( ) Connect one lead of L2, 52 microhenry choke (coded green) to terminal 2 of TS~~38~~ 48 (S), the other lead to terminal 2 of L17 (S).

8. ( ) Connect one lead of C86, .005 mfd. ceramic disc capacitor, to terminal 1 of TS~~38~~ 48 (NS), the other lead to the inside ground lug of TS~~38~~ 48 (NS).

VFO ASSEMBLY, MOUNTING AND CONNECTIONS

M. 1. ( ) Orient the phenolic plate, CH7 as shown in Figure AR. Turn 1/2" 4-40 round head cadmium plated screws into the five holes A, B, C, D and E, the screws threading the plate as they are turned in. Turn A, B, and C until the ends are flush with the opposite side of the plate. Turn D and E until they project 1/4" beyond the opposite side of the plate.

2. ( ) Secure two miniature 7 pin sockets XV1 and XV2 on the subchassis plate CH8. Use hardware sequence H. Orient as shown.

3. ( ) Mount CH8 on CH7 as shown in Figure AS inserting the screws thru the phenolic plate. Slide a #6 lockwasher and a #6 solder terminal over one 7/8" 6-32 round head screw. Insert the screw into the CH8 mounting hole nearest the center of the phenolic plate, install a half inch spacer D24, the subchassis CH8, a #6 shakeproof washer, and secure with a 6-32 nut.

   Insert another 7/8" 6-32 screw into the mounting hole for CH8 furthest from the center of the chassis, install a 1/2" spacer, CH8 the subchassis, a #6 shakeproof washer, two #6 solder terminals, secure with a 6-32 nut. Position solder terminals as shown and tighten.

4. ( ) Place CH7 in position shown in Figure AR. Connect a 3" piece of #16 tinned wire to the solder lug between sockets XV1 and XV2 (S) loop the wire around terminal B (NS) and pass the free end thru the hole near B and C.

5. ( ) Connect C12, C13, C14 and C15, 500 volt silver mica capacitors as shown in Figure AR as follows:
   a. Connect C12, 500 mmf. one lead to terminal A (NS) one lead to D (NS).
   b. Connect C13, 500 mmf. one lead to terminal B (NS) one lead to D (S).
   c. Connect C15, 1000 mmf. one lead to terminal B (NS) one lead to E (NS).
   d. Connect C14, 1000 mmf. one lead to terminal C (NS) one lead to E (S).

Cut, strip ends 5/16" and connect the following leads.

6. ( ) Connect a 5 1/8" blue lead to terminal A (NS). Blue, rubber around

7. ( ) Connect a 2" #20 bare lead (stripped black) to terminal A (S).

8. ( ) Connect a 5 1/8" red lead to terminal C (NS).

9. ( ) Connect a 2" #20 bare lead (stripped black) to terminal C (S).

10. ( ) Pass the free end of the blue lead thru the hole near D and the free end of the red lead thru the hole near E.

Mount and secure the following miniature trimmer capacitors to the phenolic board CH7 as follows: See Figures AR and AS.

11. ( ) Mount C2, 15M11 capacitor with a left rotor terminal (viewed from the rear with the stator terminal pointing down.)

12. ( ) Mount C3 30M8 capacitor with a right rotor terminal.

13. ( ) Mount C4, 15M11 capacitor with a right rotor terminal. Place a #10 solder lug on each side of the phenolic board while mounting C4.

14. ( ) Mount C5, 15M11 capacitor with a left rotor terminal. Place a #10 solder lug on the top side of the phenolic board while mounting C5 as shown in Figure AR.

M. 15. ( ) Mount C6, 30M8 capacitor with a right rotor terminal.

16. ( ) Cut a 3" piece of #16 tinned wire. Hook one end into the two #10 solder lugs between C4 and C5 (S). Connect the other end to terminal B.

Cut the following lengths of plastic insulated hookup wire, strip the ends 5/16", connect one end of each as follows, refer to Figure AS.

17. ( ) Connect a 3 1/4" green lead to the stator terminal of C3 (NS). Pass the free end thru the large hole near C2 in the phenolic plate.

18. ( ) Connect a 2 3/4" green lead to the stator terminal of C3 (NS).

19. ( ) Connect a 3 1/4" black lead to the stator terminal of C4 (S).

20. ( ) Connect a 4 1/2" ~~yellow~~ blue, fabric covered lead to terminal D on the phenolic board (S).

21. ( ) Connect a 4" green lead to terminal E on the phenolic board (S).

22. ( ) Connect a 2 3/4" yellow lead to the stator terminal of C6 (NS). Pass the free end thru the hole in the phenolic plate near C6 rotor terminal.

23. ( ) Fasten four 3/8" x 7/8" aluminum brackets, BKT8 thru BKT11, to the mounting posts of C1, the two section variable capacitor. Secure with 1/4" 6-32 binding head screws, and #6 shakeproof washers as shown in Figure AS. Level the bracket feet on a flat surface while tightening the screws.

24. ( ) Place C1 in position on the phenolic plate CH7 and secure BKT8 and BKT10 to CH7 with 3/8" 6-32 screws, #6 shakeproof washers and 6-32 nuts. Do not secure BKT9 or BKT11 at this time.

T 37

25. ( ) Install D34, flexible disc coupling to C1. Start all four 3/16" 8-32 set screws. Turn C1 shaft counterclockwise to the stop. Slide D34 over the end of the shaft to within 1/16" of the bushing of C1. Position D34 so that when viewed from the shaft end of C1 with C1 right side up, the front set screws of D34 are up and to the left. Tighten set screws on C1 shaft.

Make the following connections (operations 26 thru 31) with stripped black #20 hookup wire as directly as possible unless training the lead is specified.

26. ( ) Connect a 1 1/4" lead between C6 rotor (S) and C1B stator terminals (S).

27. ( ) Connect a 1" lead between C6 stator (NS) and C5 stator terminals (S).

28. ( ) Connect a 1 1/4" lead between C5 rotor (S) and C4 rotor terminals (S) thence to the #10 solder terminal of C4 (NS).

29. ( ) Connect a 1 1/4" lead between C3 rotor (S) and C1A stator terminals (NS).

30. ( ) Connect a 2" lead between C2 and C1 rotor terminals. Run the lead directly from the C2 rotor terminal (NS) to the phenolic plate, along the phenolic plate to a position in line with the rotor terminal of C1, then with a right angle bend directly to the rotor terminal of C1 (S).

31. ( ) Connect a 1 1/4" lead between C2 stator (S) and C3 stator terminals (NS).

32. ( ) Cut one lead of C11, a 62 mmf. NPO ceramic tubular capacitor (black-blue-red-black-orange) to 5/8", the other lead to 3/8". Place the capacitor in the position shown in Figure AS. Connect the 3/8" lead to the stator terminal of C3 (S), the 5/8" lead to the stator terminal of C1A (S).

M. 33. ( ) Cut one lead of C17, a 140 mmf NPO ceramic tubular capacitor (black-brown-yellow-brown-orange) to 3/4", the other lead to 3/8". Place in the position shown in Figure AS. Connect the 3/8" lead to the stator terminal of C6 (S) and the 3/4" lead to the stator terminal of C1B (S).

34. ( ) Connect the #16 wire extending thru the hole between C2 and C1 to the rotor terminal of C1. Train the lead directly to the terminal and pass the end thru it (S).

35. ( ) Attach the four 2 1/8" and four 2 15/16" spacer rods at the corners of the phenolic plate CH7 with the 5/8" 6-32 threaded studs. Place the 2 15/16" spacers on the bottom side of the phenolic plate as shown in Figure T and the 2 1/8" spacers on the top side of the phenolic plate.

36. ( ) Using a 2" piece of stripped #20 hookup wire, connect pins 2 (S), 3 (S) and the center shield of XV1 (S) to the nearest ground lug (NS).

37. ( ) Cut a 3 3/4" length of #16 tinned bare wire. Pass one end thru pin 7 of XV2 to the nearest subchassis ground lug (S). Also solder at pin 7, leave the extra length for later connection when the VFO is mounted.

38. ( ) Cut the leads of R1, 100K ohms 1/2 watt resistor, to 1". Connect one lead to pin 1 of XV1 (NS). Train the resistor straight away from the socket for later connection.

39. ( ) Cut the leads of C19, .005 mfd ceramic disc capacitor, to 1/2". Connect one lead to pin 6 of XV1, (NS), the other lead to the subchassis ground lug remaining unsoldered (S).

40. ( ) Connect a 1 1/4" blue lead between pin 6 of XV1 (S) and pin 5 of XV2 (NS).

41. ( ) Cut one lead of R3, 18K ohms 2 watt resistor, to 3/8" length, the other lead to 3/4". Connect the 3/8" lead to pin 1 of XV2 (S). The 3/4" lead will be connected later.

Cut the following lengths of plastic insulated hookup wire, strip the ends 5/16", connect one end of each as follows:

42. ( ) Connect a 2" green lead to pin 4 of XV1 (S).

43. ( ) Connect a 2" black lead to pin 7 of XV1 (S).

44. ( ) Connect a 2 1/2" red lead to pin 5 of XV1 (S).

45. ( ) Twist the blue and yellow leads (near C4) together two complete turns, twist red and green leads (near C5) together two complete turns.

46. ( ) Attach the 2" 6-32 screws to the VFO coil L1 (shown in Figure U) inserting the screws in the coil form from the side opposite the terminals so the following hardware sequence results: 2" screw head, shakeproof washer, coil form walls, 7/16" fiber shoulder washer (shoulder toward the coil form), 6-32 nut. Tighten the nuts securely but do not turn the nut as far as possible with pliers or a wrench as the form can be broken with such treatment. Place another nut on each screw and turn the nuts down tight to jam the securing nut.

47. (✓) Turn another 6-32 nut on each mounting screw of L1 until 5/16" of screw thread projects beyond the nut. Mount the coil on top of CH7 (See Figure T) in the holes above BKT9 and BKT11. The space wound coil should be above C12, toward the front edge of CH7. Secure each of the mounting screws of L1 and the brackets of C1 to CH7 with #6 shakeproof washers and 6-32 nuts.

M. 48. (✓) Connect the tinned #20 lead from terminal A of CH7 to terminal 4 of L1 (S).

49. (✓) Connect the green lead emerging thru the hole near terminal B of CH7 to terminal 3 of L1 (NS).

50. (✓) Connect the tinned #20 lead from terminal C of CH7 to terminal 2 of L1 (S).

51. (✓) Connect the yellow lead emerging thru the hole near C6 to terminal 1 of L1 (S).

52. (✓) Cut the leads of C10, 47 mmf N220 ceramic tubular capacitor (yellow-yellow-violet-black-orange) one to 5/8", the other to 1 1/8". Bend a right angle 3/16" from the end of each lead. Connect the short lead to terminal 3 of L1 (S). Place the end of the longer lead in the screw head slot of terminal B of CH7 (S). C10 should be parallel to the axis of L1, spaced 1/16" from the form, between the coil windings.

53. (✓) Cut the leads of C16, 91 mmf N080 tubular ceramic capacitor (red-white-brown-black-orange), one to 5/8" the other to 1". Connect the 5/8" lead to terminal 1 of L1 (S). Adjust the position of C16 so that it is parallel to the axis of L1 and connect the 1" lead to the #16 ground wire at the point where a line between terminals D and E of CH7 would cross the #16 wire (S).

54. (✓) Cut one lead of C18, 43 mmf NPO ceramic capacitor (black-yellow-orange-black-orange) and one lead of R2, 56 ohms 1/2 watt resistor, both to 3/8" long. Hook these ends together and solder (S). Connect the remaining lead of C18 to terminal 2 of SW1 (S). Bend the assembly over toward TS~~38~~ 48.

55. (✓) Mount the VFO in position as shown in Figure V, secure it to the chassis using 1/4" 6-32 binding head screws and shakeproof washers.

56. (✓) Connect the remaining lead of R2 (see operation M54) to terminal 1 of XV1 (S). Leave enough slack to clear other components.

Connect the leads between the VFO and main chassis as follows:

57. (✓) Connect the red (twisted) lead to terminal 1 of SW1 (S).

58. (✓) Connect the green lead (from C3) to terminal 12 of SW1 (S).

59. (✓) Connect the black lead (from C4) to terminal 11 of SW1 (S).

60. (✓) Connect the blue (twisted) lead to terminal 3 of SW1 (S).

61. (✓) Connect the green (twisted) lead to terminal 5 of SW1 (S).

62. (✓) Connect the yellow (twisted) lead to terminal 7 of SW1 (S).

Make the following connections from sockets XV1 and XV2 to terminal strip TS~~38~~ 48.

63. (✓) Connect remaining lead of R3, 18K ohms 2 watt resistor to terminal 6 of TS~~38~~ 48 (S).

64. (✓) Connect the red lead to terminal 1 of L17 (S).

65. (✓) Connect the black lead to terminal 3 of TS~~38~~ 48 (S).

66. (✓) Connect the green lead to terminal 4 of TS~~38~~ 48 (S).

67. (✓) Connect the #16 tinned lead to the outside ground solder lug of TS~~38~~ 48 (S).

M. 68. (✓) Connect the remaining lead of R1, 100K ohms 1/2 watt resistor, to terminal 1 of TS~~38~~ 48 (S).

N. 1. (✓) Connect R25, 1 meg 1/2 watt resistor between pin 2 of XV12 (NS) and pin 4 of XV12 (S).

2. (✓) Connect C77, 300 mmf 20% tolerance mica capacitor one lead to pin 2 of XV12, the other lead to ground lug adjacent to pin 3 of XV12 (S).

3. (✓) Connect R29, 680 ohms 1/2 watt resistor, between pin 8 of XV12 (NS) and the ground lug adjacent to pin 6 of XV12 (S).

4. (✓) Connect R31, 220K ohms 1/2 watt resistor, between pin 5 of XV13 (NS) and the ground lug nearest pin 7 of XV13 (NS).

5. (✓) Connect R32, 270K ohms 1/2 watt resistor, between pin 1 of XV13 (NS) and the ground lug nearest pin 7 of XV13 (NS).

6. (✓) Connect a 3 3/4" red plastic insulated lead between terminal 2 of TS20 (NS) and terminal 7 of TS20 (NS).

7. (✓) Connect a 2 1/2" red plastic insulated lead between terminal 1 of TS20 (NS) and terminal 4 of TS20 (NS).

8. (✓) Connect one lead of C80, 200 mmf 20% mica capacitor, to terminal 3 of TS20 (NS) the other lead to the ground lug of TS20 nearest terminal 1 (NS).

9. (✓) Connect one lead of C95, 1000 mmf 2% silver mica capacitor, to terminal 10 of TS20 (NS), the other lead to the ground lug of TS20 nearest terminal 11 (NS).

10. (✓) Mount L45, the audio reactor, as shown in Figure AA. Use hardware sequence C.

11. (✓) Cut one lead of L45 to appropriate length, tin with solder and connect to terminal 10 of TS20 (NS).

12. (✓) Trim the remaining lead of L45 to length, tin and connect to pin 6 of XV14 (S).

13. (✓) Mount T3, modulation transformer marked P2998, as shown in Figure AA. Use four 3/8" 10-32 screws, #10 shakeproof washers and 10-32 hex nuts.

14. (✓) Connect one lead of C79, .01 mfd 600V ceramic disc capacitor, to pin 1 of XV12 (NS) the other lead to terminal 3 of TS20 (S).

15. (✓) Connect R26, 47K ohms 1/2 watt resistor, between pin 1 of XV12 (S) and terminal 1 of TS20 (NS).

16. (✓) Connect R30, 47K ohms 1/2 watt resistor, between pin 6 of XV12 (NS) and terminal 5 of TS20 (NS).

17. (✓) Connect one lead of R33, 330K ohms 1/2 watt resistor, to pin 6 of XV13 (S). Pass the other lead thru pin 7 of XV13 to pin 2 of XV13. Solder at both pins.

18. (✓) Connect R53, 220K ohms 1/2 watt resistor, between terminal 1 of TS20 (S) and terminal 2 of TS20 (NS).

19. (✓) Connect R52, 47K ohms 1/2 watt resistor between terminal 2 of TS20 (S) and terminal 5 of TS20 (NS).

20. (✓) Connect the lead from the ground end (black band) of C78, .1 mfd. 400 volt capacitor to the ground lug on the end of TS20 nearest terminal 1 (S). Connect the other lead to terminal 4 of TS20 (S).

N. 21. (✓) Connect the lead from the ground end (black band) of C82, .1 mfd 400 volt capacitor to the ground lug on the end of TS20 nearest terminal 11 (S). Connect the other lead to terminal 5 of TS20 (S).

22. (✓) Connect one lead of C84, .01 mfd 600V ceramic disc capacitor to pin 1 of XV13 (S), the other lead to terminal 10 of TS20 (S).

23. (✓) Connect R35, 47K ohms 1/2 watt resistor, between terminal 7 of TS20 (S) and terminal 11 of TS20 (NS).

24. (✓) Connect R36, 10K ohms 1/2 watt resistor between terminal 11 of TS20 (NS) and pin 1 of XV14 (S).

25. (✓) Connect the lead from the ground end (black band) of C85, .1 mfd 400 volt capacitor to the ground lug adjacent to terminal 7 of XV13 (S), connect the other lead to terminal 11 of TS20 (S).

26. (✓) Connect one lead of C90, .01 mfd. 600V ceramic disc capacitor to pin 5 of XV14 (S), the other lead to pin 7 of XV15 (NS).

27. (✓) Connect one lead of C83, .01 mfd 600 volt ceramic disc capacitor to pin 6 of XV12 (S), the other lead to pin 5 of XV13 (S).

28. (✓) Connect one lead of C94, 1000 mmf 2% silver mica capacitor to pin 6 of XV14 (S), the other lead to the ground lug of XV15 adjacent to pin 6 (S).

29. (✓) Connect R44, 2200 ohms 1/2 watt resistor between pin 7 of XV14 (S) and the ground lug adjacent to pin 7 (S).

30 (✓) Connect R37, 100K ohms 1/2 watt resistor between pin 3 of XV14 (S) and pin 6 of XV14 (NS).

Using short lengths of black #20 plastic insulated hookup wire, make the following jumper connections on XV15.

31. (✓) Connect pin 1 of XV15 (NS) to pin 6 of XV15 (S).

31.a. (✓) Connect a 1 3/4" lead from terminal 1 of R34 (S) to the nearest ground lug of XV15 (S).

32. (✓) Connect pin 2 of XV15 (NS) to pin 7 of XV15 (S).

33. (✓) Connect pin 3 of XV15 (NS) to pin 8 of XV15 (NS).

34. (✓) Connect R43, 150K ohms 1/2 watt resistor between pin 2 of XV15 (S) and the ground lug adjacent to pin 1 of XV15 (S).

35. (✓) Connect R45, 820 ohms 1/2 watt resistor between pin 8 of XV15 (S) and the ground lug adjacent to pin 8 (S).

36. (✓) Connect the positive terminal of C99, 10 mfd. 25 volt electrolytic capacitor to pin 3 of XV15 (S). Connect the negative lead to the ground lug adjacent to pin 8 of XV16 (S).

37. (✓) Mount T4, the driver transformer marked P3069 as shown in Figure X use hardware sequence C.

38. (✓) Route the red lead of T4 along the wiring harness to pin 3 of XV20 (NS).

N. 39. (✓) Connect the blue lead of T4 to pin 1 of XV15 (S).

40. (✓) Connect the yellow lead of T4 to terminal 3 of TS27 (NS).

41. (✓) Connect the black lead of T4 to terminal 2 of TS27 (S).

42. (✓) Connect the green lead of T4 to terminal 1 of TS27 (NS).

43. (✓) Connect R47, 100 ohms 1/2 watt resistor between terminal 1 of TS27 (S) and pin 5 of XV17 (S).

44. (✓) Connect R46, 100 ohms 1/2 watt resistor between terminal 3 of TS27 (S) and pin 5 of XV16 (S).

45. (✓) Connect R59, 250 ma meter shunt between pin 8 of XV17 (S) and pin 1 of XV17 (S).

46. (✓) Connect the yellow lead of the modulation transformer to terminal 6 of TS25 (S).

47. (✓) Connect the red-yellow lead of the modulation transformer to terminal 5 of TS25 (NS).

48. (✓) Connect the green lead of the modulation transformer to terminal 5 of TS25 (S).

49. (✓) Connect the green-yellow lead of the modulation transformer to terminal 4 of TS25 (NS).

50. (✓) Connect the red lead of the modulation transformer to terminal 4 of TS25 (S).

51. (✓) Connect the brown lead of the modulation transformer to terminal 2 of TS25 (NS).

52. (✓) Connect the blue lead of the modulation transformer to terminal 1 of TS25 (NS).

53. (✓) Cut two pieces of W16 high voltage wire, each 5 1/2" long. Strip 5/16" of insulation from each end of both leads and tin with solder. Connect one lead to terminal 2 of TS25 (S). Connect the other lead to terminal 1 of TS25 (S). Insert the leads into the grommet G6.

54. (✓) Mount T2, the low voltage power transformer marked P3068 as shown in Figure AA. The brown, green and yellow leads emerge thru the hole nearest the center of the chassis. Secure the transformer with 3/8" 10-32 screws, shakeproof washers, and 10-32 nuts. Place a #10 solder terminal under the mounting nut nearest the center of the chassis.

55. (✓) Route one of the red leads of T2 along the wiring harness to pin 4 of XV20 (S).

56. (✓) Route the other red lead of T2 along the wiring harness to pin 6 of XV20 (S).

57. (✓) Route one blue lead of T2 along the harness to pin 1 of XV21 (S).

58. (✓) Route the other blue lead of T2 along the harness to pin 8 of XV21 (S).

59. (✓) Connect the red-yellow lead of T2 to the ground lug of XV21 adjacent to pin 1 (S)

60. (✓) Route one black lead of T2 along the rear of the chassis to terminal 1 of FH1 (S).

61. (✓) Route the other black lead of T2 along the rear of the chassis to terminal 2 of TS17 (S).

62. (✓) Connect the shortest yellow lead of T2 to pin 8 of XV20 (S).

63. (✓) Connect the longer yellow lead of T2 to pin 2 of XV20 (S). (Route around the socket past pin 8.)

N. 64. (✓) Connect one brown lead of T2 to terminal 1 of TS19 (S).

65. (✓) Connect the remaining brown lead of T2 to terminal 2 of TS19 (S).

66. (✓) Connect the short green lead of T2 to the ground terminal under one of the mounting screws of T2 (S).

67. (✓) Connect the longer green lead of T2 to terminal 1 of TS18 (S).

68. (✓) Mount L44, the low voltage choke on the inside of chassis end between TS27 and TS32, with the leads toward the inside of the chassis. Use hardware sequence C.

69. (✓) Route one lead of L44 along the harness and connect to pin 3 of XV20 (S).

70. (✓) Route the other lead of L44 along the harness and connect to pin 8 of XV20 (NS).

71. (✓) Bend one lead of R50, 1000 ohms 2 watt resistor at right angles near the end of the resistor body. 3/8" from this bend, make another right angle bend. Pass this lead thru pin 4 of XV21 to pin 5 of XV21. Solder at pin 4 and 5 both (S). Connect the other lead to pin 6 of XV21 (NS).

72. (✓) Connect one lead of C63, .005 mfd ceramic disc capacitor to terminal 2 of J1 (S), the other lead to the ground lug of TS32 (S).

73. (✓) Connect one lead of C62, .005 mfd ceramic disc capacitor to terminal 1 of J1 (S), the other lead to terminal 2 of TS32 (NS).

74. (✓) Connect R24, 4700 ohms 1/2 watt resistor between terminal 1 of TS32 (S) and terminal 2 of TS32 (S).

75. (✓) Pass one lead of C72, .005 mfd. ceramic disc capacitor thru terminal 2 of J2 to terminal 1 of J2. Solder at both terminals. Connect the other lead of C72 to terminal 3 of J2 (NS).

76. (✓) Connect one lead of L18, 4.7 microhenry insulated choke, to terminal 3 of J2 (S), the other lead to terminal 3 of TS32 (S).

77. (✓) Mount the microphone shield SH4 over J1 and J2 using four #4 self tapping screws.

78. (✓) Mount R22, 25K ohms 25 watt wire wound adjustable resistor as shown in Figure G. Use hardware sequence C.

79. (✓) Using black #20 hookup wire, connect the terminal of R22 (S) nearest to SH4, to the ground lug on the mounting foot of C93 (S).

80. (✓) To the adjustable tap of R22 nearest the terminal just connected, connect harness lead 21B brown (S).

81. (✓) To the remaining adjustable tap of R22, connect harness lead 22A gray (S).

82. (✓) To the terminal of R22 nearest L44, connect one lead of R23, 9K ohms 7 watt resistor (S). Connect the other lead of R23 to pin 6 of XV21 (S).

83. (✓) Cut eight pieces of #18 formex wire 28 1/2" long. Strip 3/8" of insulation off each end. Straighten the wires by drawing them thru the fingers. Using the dowel furnished for this purpose, wind eight close wound coils each with 19 turns. Bend the ends of the coils leads at right angles to form terminals. Tin the ends with solder and make the following connections.

N. 84. ( ) Connect L28 between terminal 1 of TS33 (S) and pin 8 of J8 (S).

85. ( ) Connect L21 between pin 1 of J8 (S) and terminal 2 of TS33 (S).

86. ( ) Connect L22 between pin 2 of J8 (S) and terminal 3 of TS33 (S).

87. ( ) Connect L23 between pin 3 of J8 (S) and terminal 4 of TS33 (S).

88. ( ) Connect L27 between pin 7 of J8 (S) and terminal 1 of TS18 (S).

89. ( ) Connect L26 between pin 6 of J8 (S) and terminal 2 of TS18 (S).

90. ( ) Connect L25 between pin 5 of J8 (S) and terminal 3 of TS18 (S).

91. ( ) Connect L24 between pin 4 of J8 (S) and terminal 4 of TS18 (S).

92. ( ) While the formex insulation of the coils just installed is quite good, adjust the positions slightly so that the coils are not in contact with one another.

93. ( ) Connect one lead of C70, .005 mfd ceramic disc capacitor to terminal 1 of TS16 (NS) the other lead to the ground lug of TS16 adjacent to terminal 1 (S).

94. ( ) Connect one lead of C68, .005 mfd ceramic disc capacitor, to terminal 2 of TS16 (NS), the other lead to the ground lug of TS16 adjacent to terminal 3 (NS).

95. ( ) Connect one lead of C69, .005 mfd ceramic disc capacitor to terminal 3 of TS16 (NS) the other lead to the ground lug of TS16 adjacent to terminal 3 (S).

96. ( ) Connect one lead of C71, .005 mfd ceramic disc capacitor to terminal 1 of TS15 (NS), the other lead to the ground lug of TS15 adjacent to terminal 1 (S).

97. ( ) Connect C66, .005 mfd ceramic disc capacitor, one lead to terminal 2 of TS15 (NS), the other lead to the ground lug of TS15 adjacent to terminal 3 of TS15 (NS).

98. ( ) Connect one lead of C67, .005 mfd capacitor to terminal 3 of TS15 (NS) the other lead to the ground lug of TS15 adjacent to terminal 3 (S).

99. ( ) Using #20 black wire, connect terminal 1 of J4 (S) to terminal 2 of TS15 (NS).

100. ( ) Using #20 black wire, connect terminal 2 of J4 (S) to terminal 1 of TS15 (NS).

101. ( ) Strip 5/16" off the ends of the line cord and tin with solder. Push the ends thru the grommet G7, tie an overhand knot about 1 1/2" from the end. Pull the leads apart, connect one to terminal 2 of TS15, the other to terminal 3 of TS15 (NS).

102. ( ) Make six additional coils as in operation N. 83. These are L31 thru L36.

103. ( ) Connect L35 between terminal 1 of TS17 (S) and terminal 1 of TS16 (NS).

104. ( ) Connect L33 between terminal 2 of TS17 (S) and terminal 2 of TS16 (NS).

105. ( ) Connect L34 between terminal 3 of TS17 (S) and terminal 3 of TS16 (NS).

106. ( ) Connect L36 between terminal 1 of TS16 (S) and terminal 1 of TS15 (S).

107. ( ) Connect L31 between terminal 2 of TS16 (S) and terminal 2 of TS15 (S).

N.108. (✓) Connect L32 between terminal 3 of TS16 (S) and terminal 3 of TS15 (S).

109. (✓) Connect a 2 1/2" blue plastic insulated lead between terminal 2 of TS13 (NS) and terminal 1 of R13 (S).

110. (✓) Connect a 3 1/4" ~~yellow plastic~~ blue fabric insulated lead between pin 7 of XV8 (NS) and terminal 2 of R13 (S).

111. (✓) Place C100, .1 mfd 400 volt tubular capacitor against the side of TS13 toward XV7 and connect the lead emerging from the ground end (black band) of C100 to the ground lug adjacent to terminal 4 of TS13 (NS). Connect the other lead to terminal 3 of R13 (NS).

112. (✓) Connect R14, 470K ohms 1/2 watt resistor between terminal 3 of R13 (S) and terminal 1 of TS13 (S).

113. (✓) Connect one lead of C51, .005 mfd ceramic disc capacitor, to pin 7 of XV8 (S), the other lead to the center shield of XV8 (S).

114. (✓) Connect one lead of C52, .005 mfd ceramic disc capacitor, to pin 3 of XV8 (S), the other lead to pin 4 of XV8 (S). ?

115. (✓) Connect one lead of C53, .005 mfd ceramic disc capacitor, to pin 6 of XV8 (S), the other lead to the ground terminal of TS13 adjacent to terminal 4 ~~(S)~~ (NS).

115A (✓) Connect one lead of C73, .005 mfd disc ceramic capacitor to terminal 2 of TS13 (N Connect other end to ground terminal of TS13 (S).

116. (✓) Connect R57, 5.1 ohms 5% resistor between terminal 2 of TS13 (NS) and terminal 4 of TS13 (S).

117. (✓) Mount the 1/2" x 4" ceramic post insulator E15 centered among sockets XV5, XV6, and XV7 as shown on Figure V. Mount with a 3/8" 8-32 screw and #8 shakeproof washer.

In the following operations using #16 wire to connect various terminals of XV5, XV6 and XV7 form both the wire lead and socket terminals as necessary in order to make the connection. Refer to Figure Y.

118. (✓) Pass a #16 lead thru the holes of pins 4 and 8 of XV5 nearest the socket body and connect to the ground lug adjacent to pin 8 (S). Also solder at pin 4.

119. (✓) Repeat the same operation on XV6.

120. (✓) Repeat the same operation on XV7.

121. (✓) Form a piece of #16 wire and pass it thru pins 1, 6, 7 and 8 of XV5. Solder at each pin except pin 1.

122. (✓) Repeat the same operation on XV6.

123. (✓) Repeat the same operation on XV7.

124. (✓) Connect one lead ofC36, .005 mfd ceramic disc capacitor to pin 1 of XV5 (S), the other lead to pin 2 of XV5 (S).

125. (✓) Connect one lead of C49, .005 mfd ceramic disc capacitor to pin 1 of XV6 (S), the other lead to pin 2 of XV6 (S).

126. (✓) Connect one lead of C50, .005 mfd ceramic capacitor to pin 1 of XV7 (S), the other lead to pin 2 of XV7 (S).

N:127. (✓) Form a jumper of #16 wire to connect pin 3 of XV5 to pin 3 of XV7. This lead should be formed so that it clears the other socket contacts by 1/8" and should have a bend in the center so that the wire passes over the point midway between sockets XV5, XV6 and XV7. See Figure Z. Solder at both ends.

128. (✓) Form a lead of #16 wire and connect between pin 3 of XV6 (S) and the center of the wire installed in the previous operation (S).

129. (✓) Connect the harness lead 44A, red-white, to the junction of these wires (NS).

130. (✓) Connect one lead of C40, .001 mfd. 1.5 KV ceramic disc capacitor to the junction of the wires previously installed (S), the other lead to the ground lug adjacent to pin 8 of socket XV6 (S).

131. (✓) Form a jumper of #16 wire to connect pin 5 of XV5 to pin 5 of XV7. This lead should be formed so that it clears the set of leads previously connected to the #3 pins of the various sockets, by 3/16" to 1/4". This lead too should have a bend so that it passes over the center midway between sockets XV5, XV6 and XV7, see Figure Z. Solder at both ends.

132. (✓) Form a lead of #16 wire and connect between pin 5 of XV6 (S) and the center of the wire installed in the previous operation (S).

133. (✓) Connect one lead of L7, 2.4 mh to the junction of the wires just installed (NS) connect the other lead to terminal 2 of TS13 (S).

134. (✓) Parallel C97 and C96, 25 mmf 5% silver mica capacitors, by twisting the leads together for the full length of the leads. Connect one end to terminal 3 of L6B near the end of the coil (NS), the other end to the center connection of the wires previously installed connecting pins 5 of XV5, XV6, and XV7 together (S).

135. (✓) Using #16 bare wire, connect pins 5 and 7 of J7 together (S) and connect to the ground lug of XV3 adjacent to pin 9 (S).

136. (✓) Connect one lead of C35, .001 mfd silver mica capacitor, to terminal 1 of SW3A (NS), connect the other lead to the ground lug under L6A mounting nut (S).

137. (✓) Install insulating tubing on each lead of L40, 2.4 mh RF choke. Connect one lead of L40 to terminal 1 of SW3A (S), connect the other lead to terminal 1 of TS10 (NS).

138. (✓) Using stripped #20 wire, connect together terminals 8 (S), 9 (S) and 10 (NS) of SW3A.

139. (✓) Connect one lead of L15, 2.4 mh RF choke, to terminal 7 of SW3A (S), the other lead to terminal 10 of SW3A (S).

140. (✓) Connect one lead of C75, 10 mmf 5% silver mica capacitor, to terminal 3 of TS10 (NS), the other lead to pin 1 of XV4 (S).

141. (✓) Connect one lead of C76, 500 mmf 5% silver mica capacitor, to terminal 3 of TS10 (NS), the other lead to the ground lug adjacent to terminal 6 of TS10 (NS).

142. (✓) Connect L41, 52 microhenry RF choke (green), between terminal 1 of TS10 (S) and terminal 3 of TS10 (S). Choke should be on front side of TS10 to keep it clear of shield to be installed later.

143. (✓) Connect R60, 470 ohms 1/2 watt resistor, between terminals 2 of XV4 (NS) and terminal 5 of XV4 (NS).

N.144. • (✓) Connect one lead of C31, .005 mfd ceramic disc capacitor, to pin 3 of XV4 (S) the other lead to pin 4 of XV4 (S).

145. • (✓) Connect one lead of C33, .005 mfd ceramic disc capacitor, to pin 5 of XV4 (S) the other lead to pin 6 of XV4 (S).

• 146. (✓) Connect one lead of C34, .005 mfd ceramic disc capacitor, to pin 7 of XV4 (NS) the other lead to the ground lug of XV4 adjacent to pin 8 (S).

• 147. (✓) Connect ~~R55~~ R56, 2.2 ohms 5% resistor, between pin 2 of XV4 (S) and pin 7 of XV4 (S).

• 148. (✓) Connect R9, 15K ohms 1/2 watt resistor, between terminal 5 of TS10 (S) and terminal 6 of TS10 (NS).

• 149. (✓) Connect one lead of C88, .005 mfd ceramic disc capacitor, to terminal 6 of TS10 (NS), the other lead to the ground lug adjacent to terminal 6 of TS10 (S).

• 150. (✓) Connect the ground lead of C89, .1 mfd 400 volt capacitor, to the ground lug adjacent to pin 6 of XV4 (S), the other lead to terminal 6 of TS10 (NS).

• 151. (✓) Connect R38, 22K ohms 1/2 watt resistor between pin 1 of XV11 (S) and the ground lug adjacent to pin 3 of XV11 (S).

• 152. (✓) Connect one lead of C28, .005 mfd ceramic disc capacitor, to pin 6 of XV11 (S) the other lead to pin 5 of XV11 (S).

• 153. (✓) Connect R42, 47K ohms 1 watt resistor, between pin 7 of XV11 (S) and terminal 3 of R39 (NS).

• 154. (✓) Connect R41, 18K ohms 2 watt resistor between pin 8 of XV11 (NS) and terminal 3 of R39 (S).

• 155. (✓) Connect a short length of #20 plastic insulated wire between pin 8 of XV11 (S) and pin 3 of XV11 (S).

• 156. (✓) Using bare #20 wire, connect terminal 1 of R39 (S) to the ground terminal adjacent to pin 3 of XV3 (S).

• 157. (✓) Connect one lead of C27, .005 mfd ceramic disc capacitor, to pin 3 of XV3, the other lead to the ground lug adjacent to pin 1 of XV3 (NS).

• 158. (✓) Connect R8, 68K ohms 1 watt resistor between pin 6 of XV11 (S) and pin 3 of XV3 (NS).

• 159. (✓) Connect R40, 1 megohm 1/2 watt resistor between terminal 2 of R39 (S) and pin 2 of XV11 (S).

• 160. (✓) Connect one lead of C25, .005 mfd ceramic disc capacitor, to pin 4 of XV3 (S), the other lead to pin 5 of XV3 (S).

• 161. (✓) Connect R11, 33K ohms 1/2 watt resistor between pin 9 of XV3 (S) and the ground lug adjacent to pin 1 of XV3 (S).

• 162. (✓) Connect R6, 470 ohms 1/2 watt resistor between pin 1 of XV3 (NS) and terminal 3 of TS6 (NS).

• 163. (✓) Connect one lead of C87, .005 mfd ceramic disc capacitor to pin 1 of XV3 (S), the other lead to terminal 3 of TS6 (NS).

N.164. (✓) Connect one lead of L19, 200 microhenry RF choke (red), to terminal 4 of TS6 (S), the other lead to terminal 7 of TS6 (S).

165. (✓) Connect one lead of L20, 125 microhenry choke (black) to terminal 2 of TS6 (S), the other lead to terminal 5 of TS6 (S).

166. (✓) Connect one lead of C22, 300 mmf mica capacitor, to terminal 6 (S) of TS6, the other lead to terminal 8 of TS6 (S).

167. (✓) Connect one lead of C24, 200 mmf mica capacitor, to terminal 3 of TS6 (NS), the other lead to pin 8 of J7 (NS). (Route per Fig. AB.).

168. (✓) Connect one lead of L4, 2.4 microhenry RF choke, to terminal 3 of TS6 (S), the other lead to pin 8 of J7 (NS). (Route per Fig. AB.).

169. (✓) Connect ~~R56~~ R55, 2.2 ohms 5% resistor between pin 4 of J7 (NS) and pin 7 of J7 (S).

170. (✓) Using stripped #20 wire connect a jumper between pin 4 of J7 (NS) and pin 8 of J7 (S).

171. (✓) Connect one lead of C30, .005 mfd ceramic disc capacitor to pin 4 of J7 (S), the other lead to pin 5 of J7 (S).

172. (✓) Connect one lead of C23, 25 mmf 5% silver mica capacitor, to terminals 3 (NS) and 4 of SW2 (S), the other lead to terminal 7 of SW2 (S).

173. (✓) Connect R7, 1 megohm 1/2 watt resistor between terminal 3 of SW2 (S), and terminal 10 of SW2 (S).

174. (✓) Connect a 3 1/2" red plastic lead between terminal 1 of TS1 (NS), and pin 3 of XV10 (S).

175. (✓) Connect a 4" black plastic lead between terminal 5 of TS1 (NS) and the ground lug adjacent to pin 5 of XV10 (S).

176. (✓) Place R19, 15K ohms 10 watt resistor, against the chassis on the side of TS1 toward the rear of the chassis. (It may not touch any of the plastic leads.) Connect one resistor lead to terminal 1 of TS1 (NS), the other lead to terminal 6 (S).

177. (✓) Connect R20, 18K ohms 2 watt resistor between terminal 1 of TS1 (S) and terminal 5 of TS1 (S).

178. (✓) Before mounting SW4, make the following jumper connections. Orient the switch as shown in Figure AD. Use #20 black insulated wire, bare wire if the lugs are adjacent.

- a. Jumper terminal 6 of SW4A (NS) to terminal 7 of SW4A (S).
- b. Jumper terminal 11 of SW4A (NS) to terminal 12 of SW4A (S).
- c. Jumper terminal 8 of SW4A (S) to terminal 9 of SW4A (NS).
- d. Jumper terminal 9 of SW4A (S) to terminal 7 of SW4B (NS).
- e. Jumper terminal 2 of SW4B (S) to terminal 4 of SW4B (NS).
- f. Jumper terminal 6 of SW4B (NS) to terminal 8 of SW4B (S).

179. (✓) Mount switch SW4 as shown in Figure 3, oriented as in AD using hardware sequence G.

180. (✓) Connect the following harness leads to SW4:

- a. 43B, blue-orange, to terminal 6 of SW4A (NS).
- b. 56B, blue-orange, to terminal 6 of SW4A (S).

N.180. c. 44B, red-white, to terminal 5 of SW4A (S).
d. 53B, blue-yellow, to terminal 3 of SW4A (S).
e. 25B, orange, to terminal 2 of SW4A (S).
f. 62B, black, to terminal 11 of SW4A (S).
g. 65B, blue, to terminal 1 of SW4A (NS).

181. Connect a 3 1/2" black wire from terminal 6 of SW4B (S) to pin 2 of XV9 (S).

182. Connect the following harness leads to SW4:
a. 60B, gray, to terminal 7 of SW4B (S).
b. 61B, red, to terminal 5 of SW4B (S).
c. 64B, violet, to terminal 4 of SW4B (S).
d. 26B, yellow, to terminal 1 of SW4B (S).

183. Connect a 3 1/2" orange wire from terminal 1 of SW4A (S) to terminal 10 of SW2 (S).

184. Connect a 1 1/2" yellow lead from terminal 9 of SW4C (S) to pin 8 of XV4 (S).

185. Connect one lead of C29, 50 mmf 5% silver mica capacitor to terminal 1 of L5 (S), pass the other lead thru terminal 10 of SW4C to terminal 11 of SW4C. Solder at terminal 11 only.

186. Connect R10 and R54, both 100 ohm 2 watt resistors in parallel. Connect one end of the parallel combination to pin 4 of XV11 (S), connect the other end to terminal 12 of SW4C (S).

187. Connect one lead of C101, 100 mmf 5% silver mica capacitor, to terminal 12 of SW4C (S), connect the other lead to terminal 4 of SW4C (NS).

188. Connect L14, 2.4 millihenry choke, between terminal 6 of TS10 (S), and terminal 9 of SW4C (S).

0. 1. Mount L11, the plate choke, on top of the chassis as shown in Figure AA. Place a #10 solder terminal between the ceramic core of the choke and a #10 shakeproof washer next to the chassis, secure with a 3/8" 8-32 screw and shakeproof washer. Turn L11 so the bottom terminal points toward the rear of the chassis, the #10 solder terminal pointing away from socket XV7.

2. Connect one lead of C47, .01 mfd 1500 volt ceramic disc capacitor to terminal 1 (terminal nearest the chassis) of L11 (NS), connect the other lead to the ground lug under L11 (NS).

3. Connect C48, .01 mfd 1500 volt ceramic disc capacitor, one lead to terminal 2 of L11 (next to terminal 1) (NS), connect the other lead to the ground lug under L11 (S).

4. Connect L12, 4.7 microhenry choke (appears similar to a 1 watt resistor color coded yellow, violet, silver) between terminal 1 of L11 (NS) and terminal 2 of L11 (S).

5. Connect harness lead 29B, violet, to terminal 1 of L11 (S).

6. Position C47 and C48 so their cases do not touch the chassis.

7. Connect the #16 lead from terminal 3 of L6B (passing thru the hole in the chassis) to the nearest stator terminal of C7 (S). Adjust the position of the wire so it clears the hole nicely.

0. 8. (✓) Connect a 4" black #20 lead to the rotor lug of C7 (S), pass it thru the same hole in the cahssis as the stator lead, connect to the ground lug on XV4 adjacent to pin 1 (S). Adjust position so it clears the stator lead as much as possible.

9. (✓) Connect the post E15 (located on top of the chassis midway between XV5, 6 and 7) to the plate choke L11 in the following manner. Place 4 #10 solder lugs on a 3/8" 8-32 round head screw, place one end of E18 (2 3/4" x 1/2" silver plated strap) over the screw and tighten into E15 (the post). Place a #10 shakeproof washer over a 3/8" 8-32 screw, place L bracket BKT14 (3/4" x 3/4" right angle bracket) over the screw. Tighten the screw into L11 with the bracket pointing up.

10. (✓) Mount C37, 2,000 mmf 1.5 KV capacitor to the L bracket just mounted on L11 using a 1/4" 6-32 binding head screw and shakeproof washer. Adjust the position of the bracket so the capacitor points toward the rear of the chassis.

11. (✓) Prepare to mount C42, 600,900,1200 mmf three section mica capacitor underneath the chassis in the hole opposite SW3B and opposite J6. Place a #10 solder lug and a #10 shakeproof washer over the screw. Bend the end of the solder lug so it will touch the common terminal of the capacitor (common terminal marked with an "0"). Fasten the end of the solder lug to the common terminal with a small scrap of wire and solder. Trim off any excess wire.

12. (✓) Place a 7/16" spacer over C42 mounting screw, a #6 shakeproof washer, two #6 solder lugs, and another #6 shakeproof washer. Place the screw in the hole corresponding to the position shown on Figure G. Secure with a #6 shakeproof washer and 6-32 nut on top of the chassis. The position must be adjusted later.

13. (✓) Mount C8, dual 120 mmf variable capacitor as shown on Figure 2. Install the two front 1/4" 6-32 binding head screws by placing a #6 shakeproof washer and a fiber shoulder washer over each screw, shoulder toward the chassis. Place fiber shoulder washers under each of the capacitor mounting feet, shoulders toward the chassis. Mount the rear of the capacitor by placing a #6 shakeproof washer, a #8 flat washer, two #10 solder lugs and a fiber shoulder washer over a 1/2" 6-32 screw. Place a fiber shoulder washer under the rear capacitor mounting foot, install mounting screw.

14. (✓) Mount C9, 360 mmf variable capacitor, underneath the chassis as shown in Figure G by passing two 7/8" 6-32 screws thru the chassis from the top, thru aluminum spacers D40 (11/16") and thru #6 shakeproof washers to the capacitor mounting feet.

15. (✓) Install a 1/4" bearing in the front of the chassis, threads to the front, opposite BKT6. Use hardware sequence G. Mount the output coupling switch SW6 as shown in Figure G with terminal 4 toward the top of the chassis. Use hardware sequence G. Identify SW6 from sketch AF.

16. (✓) Mount C91 and C92, 80 mfd 450 volt tubular electrolytics, as shown in Figure AB. Use hardware sequence C.

17. (✓) Connect the negative lead of C91 and the positive lead of C92 to pin 3 of XV18 (S).

18. (✓) Connect the positive lead of C91 to pin 2 of XV18 (NS).

19. (✓) Connect the negative lead of C92 to pin 3 of XV19 (S).

0. 20. (✓) Connect one lead of R17, 20K ohms 10 watt resistor, to terminals 1 (S) and 2 of TS12 (NS). Connect the other lead to terminal 5 of TS12 (S).

21. (✓) Connect one lead of R18, 20K ohms 10 watt resistor, to terminal 2 of TS12 (S). Connect the other lead to terminals 6 and 7 of TS12 (NS).

22. (✓) Connect one lead of R58, 500 ma meter shunt, to terminal 7 of TS12 (S), the other lead to the ground lug adjacent to terminal 7 of TS12 (S).

23. (✓) Connect each of the parasitic suppressors (L8, L9 and L10) to one of the #10 solder terminals atop the insulator post E15 (S).

24. (✓) Attach a plate cap (E8, E9, E10), one to each of the remaining leads of the parasitic suppressors (S). Defer adjusting the positions until ready to install the 6146 tubes.

25. (✓) Slide a fiber insulating washer over the threaded bushing of the final tuning capacitor C8 with the extruded portion of the washer toward the front of the chassis. Slide a second fiber insulating washer over the bushing with its extrusion toward the first insulator. Fasten with a 3/8"-32 nut.

26. (✓) Install four 6-32 spade bolts on bottom edge of the final shield SH1. Use hardware sequence C with the spade bolts and nuts toward the rear of the chassis when the shield is in position. Mount a 1 1/2" cone insulator on what will be the rear of the shield. Slide the slot in the shield between the insulating washers on C8 and secure the shield to the chassis with #6 shakeproof washers and 6-32 nuts.

27. (✓) Mount the neutralizing capacitor C74, 10 mmf 5000 volt variable, behind the shield with the shaft toward the front of the chassis. Use two fiber shoulder washers so that the capacitor bushing is insulated from the shield. Secure with a 3/8"-32 nut. If C74 remains loose, cut part of the shoulder off one washer with a knife and replace.

28. (✓) Using #16 tinned wire, connect the remaining solder lug on top of the insulator post (S) to the stator of C74 (S).

29. (✓) Straighten a piece of #16 tinned wire by drawing it successively thru the fingers. Pass thru the hole in the shield to the rotor terminal of C74 (S). Cut the wire to approximately 6", connect the other end to the top terminal of L6A (S).

P 1. (✓) Mount the high voltage transformer T1 as shown in Figure 2 using 3/8" 10-32 screws, #10 shakeproof washers and nuts. Leads should pass thru the 3/4" hole toward the inside of the chassis.

2. (✓) Connect the red-yellow lead to terminal 6 of TS12 (S).

3. (✓) Connect one red lead to terminal 2 of TS8 (NS). Route along harness.

4. (✓) Connect the other red lead to terminal 1 of TS8 (NS). Route along harness.

5. (✓) Route one black lead along the harness to terminal 2 of TS17 (S).

6. (✓) Route the other black lead along the harness and connect to terminal 2 of RY1 (S).

P. 7. ( ) Install an 8-32 nut on each of the mounting studs of the high voltage choke, L43. Adjust the positions of the nuts so that when L43 is mounted underneath the chassis behind RY1, the choke rests on the nuts. With the choke leads toward the front of the chassis, secure with #8 shakeproof washers and 8-32 nuts against the edge of the chassis.

8. ( ) Connect the longest lead of L43 to terminal 2 of XV18 (NS).

9. ( ) Connect the other lead of L43 to terminal 1 of XV19 (S).

Q. 1. ( ) Prepare the single sideband input cable per the sketch Figure AC.

2. ( ) Mount the connector J5 from inside the chassis next to TS15. Use hardware sequence F.

3. ( ) Connect the opposite end of the cable to terminal 4 of SW4C (S).

R. 1. ( ) Connect one lead of R15, 12K ohms 25 watt resistor, to pin 2 of XV18 (S). Connect the other lead to pin 3 of TS8 (S).

2. ( ) Connect 8" of W16 white high voltage wire to terminal 1 of TS8 (S).

3. ( ) Connect 8" of W16 white high voltage wire to terminal 2 of TS8 (S).

4. ( ) Train the two leads thru grommet G5 and prepare the ends as follows:
   a. Slide 1" of W17 insulating tubing over each lead.
   b. Solder plate caps E13 and E14, one to each lead.
   c. Slide the tubing over each connection.

5. ( ) Connect resistors R48 and R49, 22 ohm 1/2 watt resistors to the modulation transformer leads emerging thru grommet G6 as follows:
   a. Slide 1" of W17 insulating tubing over each lead.
   b. Form a small hook in one end of each resistor and solder one resistor to each of the leads from the modulation transformer.
   c. Form a hook on the opposite end of each resistor and solder plate caps E11 and E12, one to each resistor.
   d. Slide the tubing over the resistors and solder connections.

6. ( ) Mount L13B, the auxiliary final tank coil to C37, the plate blocking capacitor, as shown inFigure AA. Use a 1/4" 6-32 binding head screw, #6 solder terminal, #6 shakeproof washer.

7. ( ) Secure a #6 solder terminal to the rear mounting foot of C8 with a #6 shakeproof washer and nut. Connect a short jumper of #16 wire between the rotor terminal on the rear of C8 (S) and the solder terminal just installed (S).

8. ( ) Mount the 2" cone insulator E17 on top of the chassis behind the dual capacitor C8. Use the mounting hardware furnished on the insulator placing the cork washer between the insulator and the chassis.

9. ( ) Straighten a length of #16 wire and connect between the solder lug at the junction of C37 and L13B (S) and the nearest rear stator terminal of C8 (S).

10. ( ) Looking at the chassis from the bottom there is a line of 5 half inch holes to the left of SW3B. Thru the second of these holes from the front of the chassis, connect a #16 lead from the stator terminal of the front section of C8 (S) to terminal 4 of SW3B (NS).

R. 11. (✓) Prepare L13A, the final tank coil for mounting. Cut ~~four~~ three straightened 6 1/2" leads of #16 tinned wire. Note that there are three small holes drilled in the tubing of L13A. Solder one of these leads in each of the holes in L13A.

12. (✓) Remove the hardware from the top of cone insulators E17 mounted on the chassis and E16 mounted on the final amplifier shield. Pass the leads of L13A thru the appropriate chassis holes, secure the end of the coil to E16 with a pair of #10 solder terminals under the end lug of L13A. Pass the screw of E17 thru the rear end of L13A, thru the remaining end of L13B and secure to the cone insulator E17.

13. (✓) Mount L39, the 160 meter auxiliary inductor as shown in Figure AA. Attach the spade mounting bolts using the following hardware sequence, 1 3/8" 6-32 screw, #6 spade bolt, 7/16" OD shoulder washer with the shoulder toward the coil form, pass screw thru coil form from the side nearest the coil terminals, fiber shoulder washer, #6 spade bolt, #6 shakeproof washer and 6-32 nut. Tighten securely taking care not to break the form. Secure the inductor to the chassis with terminals toward C8, using #6 shakeproof washers and nuts.

Use #16 tinned copper wire to make the following connections:

14. (✓) Bend the front stator terminal of C9 over so it is parallel with the chassis. Pass the lead thru this terminal, thru the hole in the chassis to the bottom terminal of L39 (S). Cut the lead to length and connect to terminal 10 of the coupling switch SW6 (NS). Solder the connection to the stator of C9.

15. (✓) Adjust one of the #10 solder terminals at the end of L13A, nearest the front of the chassis, so it points directly toward the chassis. Connect a #16 lead to this terminal (S), run thru the chassis hole underneath and connect to terminal 9 of SW3B (NS).

16. (✓) Connect the tap which is six turns from the front of L13A to terminal 12 of SW3B (S).

17. (✓) Connect the tap which is ten turns from the front of L13A to terminal 1 of SW3B (S).

18. (✓) Connect the tap on the rear end of L13A to terminal 2 of SW3B (S).

19. (✓) Two turns from the end of L13B, which connects to L13A, solder a lead of #16 wire. Pass the lead thru the remaining large chassis hole and connect to terminal 3 of SW3B (S).

20. (✓) Adjust the position of the remaining #10 solder terminal at the front end of L13A so it points up. Connect a #16 lead from this terminal (S) to the top terminal of L39 (S).

21. (✓) Connect a #16 lead from terminal 10 of SW6 (NS) to terminal 10 of SW3 B (S). Route the lead between the switch shaft and the tie rod closest to the chassis.

22. (✓) Connect a #16 jumper from terminal 9 of SW3B (S) to terminal 11 of SW3B (S).

23. (✓) Connect a #16 jumper from terminal 3 of SW3B (S) to terminal 5 of SW3B (S).

24. (✓) Fasten two #6 solder lugs underneath the chassis between FH1 and SW3B.

25. (✓) Make up C39, consisting of four 330 mmf silver mica capacitors connected in series-parallel per the sketch AG.

R. 26. (✓) Connect one end of C39 to terminal 4 of SW3B (S), the other end to one of the solder terminals installed on the chassis between FH1 and SW3B.

27. (✓) Make up C38, consisting of four 150 mmf mica capacitors connected in series-parallel per the sketch.

28. (✓) Connect one end of C38 to terminal 6 of SW3B (S), the other lead to the remaining solder terminal between FH1 and SW3B.

29. (✓) Adjust the position of C42 to that shown on drawing AE. Solder terminal 2 of C42 directly to terminal 4 of SW6. Be careful not to permit the screw in C42 to turn!

30. (✓) Form a hook on the end of a piece of #16 wire, solder this end to terminal 1 of C42. Connect the other end of the lead to terminal 2 of SW6 (S).

31. (✓) Form a hook in the end of a #16 lead, connect to terminal 3 of C42 (S) connect the other end of the lead to terminal 6 of SW6 (S).

32. (✓) Connect a #16 lead between one of the solder terminals beneath the mounting post of C42 (S) and one of the solder terminals mounted by the rear mounting screw of C8 (S).

33. (✓) Connect a short length of #16 wire to each end of C41, 300 mmf 1200 V mica capacitor. Position as shown on drawing AE, connect one lead to the remaining solder lug under C42 mounting post (S), the other lead to terminal 1 of SW6 (S).

34. (✓) Connect a #16 wire lead from the rear rotor terminal of C9 (S) to the remaining solder lug connected to the rear mounting screw of C8 (S).

35. (✓) Connect a #16 lead from terminal 10 of SW6 (S) to the output coaxial connector J6 (S).

36. (✓) Install a 1/4" panel bearing in the front edge of the chassis opposite the shaft of C9. The threads should extend thru the chassis from inside the chassis.

37. (✓) In the same way, install a panel bearing in the bracket on the front edge of the chassis opposite the shaft of C8.

38. (✓) In the same way, install a panel bearing in the bracket on the front edge of the chassis opposite the shaft of C7.

39. (✓) Install the ~~set~~ 1/8" 8-32 screws in the three 1/4" rigid shaft couplers. Attach one to the shaft of C9, one to the shaft of C8 and one to the shaft of C7.

40. (✓) Pass the 8 1/8" x 1/4" shaft thru the corresponding panel bearing and fasten to the shaft coupler on C9. (The shaft should be the correct length when tight against the shaft of C9.)

41. (✓) Pass the 6 7/16" x 1/4" shaft thru the corresponding panel bearing and fasten to the shaft coupler on C8.

42. (✓) Pass the 5 5/16" shaft thru the corresponding panel bearing and fasten to the shaft coupler on C7.

43. (✓) Tighten set screws completely then loosen and tighten again to "set" them permanently and prevent slipping.

PRELIMINARY TESTS

S. 1. ( ) It is desirable to make the following resistance checks if a suitable meter is available. Resistance values should be within plus or minus 20%. Resistance is measured from the prescribed terminal to chassis. Install the fuse F1 (1 1/2a Slo Blo) in the holder FH1.

Terminal	Resistance
Pin 3 of XV20	10.8K ohms 13K
Pin 1 of XV12	250K ohms 650K
Pin 6 of XV12	60K ohms 100 170K
Pin 1 of XV14	60K ohms 70K
Pin 2 of XV18	40K ohms 40K
Pin 3 of XV18	20K ohms 20K
Pin 5 of XV21	12.2K ohms 1K

Optional: Remove the green transformer lead from terminal 1 of TS18

Term. 1 of TS18	Open circuit

Resolder the green transformer lead to terminal 1 of TS18.

2. ( ) Temporarily install 1 1/8" knobs on SW3, SW2, SW4, SW5 and R51. Use 3/16" 8-32 set screws.

3. ( ) Temporarily connect the meter M1 using black and red leads. Using an 18" red lead connect the positive terminal of M1 to terminal 12 of SW5 (S). Use an 18" black lead connecting the negative terminal of M1 to terminal 6 of SW5 (S). Be careful with the meter while testing. Lay the meter in the box to keep it from becoming damaged during these tests.

4. ( ) Insert the tubes in the sockets as follows, refer to Figure AA.
   a. V1, 6AU6 in XV1, the rear socket of the VFO.
   b. V2, OA2 in SV2, the front socket of the VFO.
   c. V3, 6CL6 in XV3.
   d. V4, 5763 in XV4.
   e. V5, V6, V7, V16 and V17, all 6146s in sockets XV5, XV6, XV7, XV16 and XV17. Connect the plate caps. Adjust position suppressors for V5, 6 and 7 if necessary.
   f. V8, 6AQ5 on XV8.
   g. V9, V10, both VF105/OC3, in XV9 and XV10.
   h. V11 and V15, both 12AU6, in sockets XV11 and XV15. 12AU7
   i. V12, 12AX7 in socket XV12.
   j. V13, 6AL5 in socket XV13.
   k. V14, 6C4 in socket XV14.
   l. V18 and V19, both 866A, in sockets XV18 and XV19. Connect the plate caps.
   m. V20, 5V4G in socket XV20.
   n. V21, 6BY5GA in socket XV21.

5. ( ) Make the following control settings: (viewed from the front of the chassis)

VFO tuning	(C1)	--- counterclockwise
All VFO trimmers		--- midposition
Mode switch	(SW4)	--- counterclockwise
Bandswitch	(SW3)	--- first position away from counterclockwise
Meter switch	(SW5)	--- first position away from counterclockwise
Xtal-VFO switch	(SW2)	--- second position away from counterclockwise
Keyer control	(R39)	--- counterclockwise

S. 6. ( ) Using #16 tinned wire, make the following jumper connections in the 9 prong plug, P8.

a. Connect a 2 1/2" lead between pin 3 (S) and pin 5 (S).
b. Connect a 2 3/4" lead between pin 2 (S) and pin 6 (S).
c. Connect a 2 1/4" lead between pin 7 (S) and pin 8 (S).

Cut off the excess lead lengths protruding thru the pins and replace the metal shell over the connector.

7. ( ) Insert plug P8 into J8.

8. ( ) To prepare the line cord for attaching the power plug P9, slit the wires apart back two inches. Strip off 1/2" of insulation, tin each lead with solder. Tie the leads together in an overhand knot at the point where they were split apart.

9. ( ) Disassemble the line cord plug P9. Attach one line cord lead to each of the fuse clips in the plug, fastening the leads with the screws. Reassemble the power plug with the knot inside the plug.

10. ( ) Install the 8 ampere fuses in the plug.

11. ( ) If the optional portion of step R. 1. was not performed, then as a precautionary measure, check the 6.3 volt AC filament leads (green) at each socket terminal. Be sure that there are no grounds to the chassis. (The filament winding is capable of delivering enough current to damage the wiring harness if grounded.)

12. ( ) Throw SW7 and SW8 to the off positions. Plug P9 into the 115 volt line. Pull out V20, the 5V4G and V21, the 6BY5GA tube.

13. ( ) Turn SW7 to the "on" position and check to see that all the filaments light.

14. ( ) Plug the 6BY5GA bias rectifier back into socket XV21. After the 6BY5GA warms up the voltage from pin 5 of XV21 should read 250 volts or more <u>negative</u> with respect to the chassis.

15. ( ) Plug the 5V4G rectifier back into socket XV20. After the tube warms up a voltage of 300 volts or more, <u>positive</u> with respect to the chassis should appear at pin 6 of XV3.

Tests R.13 and R.14 serve to insure that the bias and low voltage DC supplies are normal.

PRELIMINARY VFO TESTS

28 ma

30 ma

T. 1. ( ) With SW7 on, note the meter reading. It should be between 22 and 25 ma. (Read the top scale, ignore the last zero.)

2. ( ) Short the close wound coil of L1 momentarily with a screwdriver. A marked rise in meter current will occur if the VFO is oscillating. If this rise does not occur, check leads and terminals for clearance and the circuits for wiring correctness.

3. ( ) Listen for the VFO signal with a receiver. It should be found within 100 kc of 1725 or within 300 kcs of 3960 kcs. When C1 is turned to the clockwise position, the signal should be found within 100 kcs of 1980 kcs.

4. ( ) Turn the meter switch to the next step clockwise (buffer current). Advance the drive control, R51, about a third of the way clockwise, note that the current rises.

I. 5. ( ) Turn the meter switch another step clockwise (grid current). Turn the buffer capacitor, C7, and note that the grid current rises as the buffer is tuned to the VFO frequency. Keep the grid current below 8 ma on the 25 ma scale. If no grid current is noted, check the crystal oscillator amplifier associated with V4 and the buffer circuit associated with V9.

6. ( ) Turn the meter switch SW5 back to the first step from the counterclockwise position, the bandswitch to the third position (40 meter) from the counterclockwise position.

7. ( ) Short the space wound coil of L1 momentarily with a screwdriver. Once again the meter current will rise if the VFO is oscillating.

8. ( ) With C1 in the counterclockwise position the VFO signal should be found within 200 kcs of 6800 kcs. When C1 is in the clockwise position the VFO should be within 200 kcs of 7250 kcs.

9. ( ) Disconnect the power plug, disconnect the meter, remove the knobs.

10. ( ) Place a drop of light oil on the shaft of C1 near each end bearing.

11. ( ) Attach the top shield per the following steps:

a. Pre-tap the eight holes in the flanges of CH5 by running a well lubricated 1/4" #4 binding head self tapping screw into each hole to cut the threads. Remove the screw or screws.

b. Near one end of the insulated trimmer shafts D32 there are two grooves cut around the shafts. Force a 7/16" OD "C" washer into the second groove from the end of each of the shafts.

c. Place the coupling springs and insulated trimmer shafts over the trimmer capacitor shafts C2, C3, C4, C5 and C6 of the VFO as shown in Figure AH. The springs may be distorted slightly with pliers so that the spring is retained by the insulated shaft.

d. Put CH5 in place and secure with 1/4" 6-32 binding head screws at each of the posts.

e. Check the centering of CH5 and the assembly of each of the trimmer shafts. Remove the springs, open them slightly and reinsert if there is insufficient force against the shafts to hold the springs in place securely. Set each trimmer at mid-position.

f. Force a 7/16" OD "C" washer over each of the outer slots of the five insulated trimmer shafts emerging thru CH5.

12. ( ) Prepare and attach the VFO shield SH2 per the following steps:

a. Pre-tap the six holes on the flanged side of SH2 with a well lubricated 1/4" #4 binding head sheet metal screw.

b. Secure six #6 spade bolts to the bottom end of SH2. (The bottom is the end with the 7/16" wide slot.) Starting from the inside of SH2 use a sequence of 1/4" 6-32 binding head screw, SH2 side, spade bolt, #6 shakeproof washer, 6-32 nut.

c. Slide SH2 over the VFO with the slot toward the front of the chassis, the spade bolts toward the chassis. It may be necessary to spread the flanged end of SH2 somewhat to permit the spade bolt screw heads to pass CH5 and the phenolic plate.

d. Secure each of the spade bolts with a #6 shakeproof washer and 6-32 nut.

e. Fasten SH2 to CH5 with six 1/4" #4 binding head sheet metal screws and #4 shakeproof washers. Mount TS50 as shown in Figure A1 with the front screw on the right side.

13. ( ) Fasten the short 1/4" shaft end of the planetary drive D3, to the flexible coupling mounted on C1, the VFO tuning capacitor. Insert the screwdriver from inside the chassis thru the hole above the shaft of SW3.

T. 14. Rotate C1 to the counterclockwise stop. Temporarily mount the dial pointer to the planetary sleeve with the 1/8" 4-40 screw. Mount the pointer in a position parallel with the chassis top. With C1 still against the counterclockwise stop measure the distance from the top of the chassis to the pointer. Now move the pointer until the rotor plates of C1, viewed from the open side of the VFO, are as nearly exactly meshed as can be determined. Measure this distance from the top of the chassis to the pointer and subtract the smaller dimension from the larger one. Record the difference as this arc length will be used later to set up the dial. It may vary from zero to 3/16".

15. Remove the dial pointer from D3. Take care in the following steps not to apply undue forces to the planetary drive and possibly damaging the coupling.

16. Attach spade lugs to the bottom of the side plate, CH6. The bottom has holes spaced 2 1/2" whereas the holes at the top are spaced 2". Use the following sequence at each hole, 1/4" 6-32 binding head screw, #6 spade lug, CH6, #6 shakeproof washer, 6-32 nut.

17. Place CH6 in position against SH2 with the spade lugs outside and secure to the chassis with #6 shakeproof washers and 6-32 nuts.

18. Fasten CH6 to SH2 with eight 1/4" #4 binding head sheet metal screws and #4 shakeproof washers. Mount TS51 as shown in Figure AJ with the top front screw.

19. Fasten the buffer shield, SH5, over the front deck of SW3 as shown in Figure AK with four 1/4" #4 binding head sheet metal screws and #4 shakeproof washers. Train the wires and components to clear SH5. Lubricate the screws before starting them into the chassis.

20. Install a 1/2" 8-32 screw on the rear of the chassis between FH1 and J6. The screw should extend thru the chassis from the inside. Use a #8 shakeproof washer under the head and under the nut both. This serves as the transmitter ground terminal.

FRONT PANEL PREPARATION AND MOUNTING

U. 1. Attach the meter and meter shield bracket to the front panel with the hardware in the meter box. Lay the panel face down with the meter properly positioned beneath it. Place the meter shield bracket over the meter mounting studs and secure with #4 flat washers, #4 lockwashers and 4-40 nuts. Using diagonal cutters cut enough of the flat washers away so they will clear the tubular body of the meter.

2. Mount the meter shield cover SH3 as follows: See photo AL
   a. Attach a three terminal strip TS49, to SH3. Use hardware sequence A with the screw heads inside the shield cover.
   b. Place a 1/2" piece of W15, .208 ID tubing over each of the meter terminals.
   c. Place SH3 over the rear of the meter M1, with the meter studs protruding thru the holes in the shield and with the terminal strip toward the top of the panel. Place a shoulder washer, E1 over each of the meter studs with the small ends extending thru the holes in SH3. Use two of the nuts in the envelope and place one on each stud. Tighten until the meter shield is snug in the meter shield bracket making good contact. (Don't tighten excessively bowing the shield SH3.)
   d. Place a #10 solder lug over each of the studs pointing toward the bottom of the panel. Place a flat washer over each of the studs, install a nut on each of the studs and tighten securely. DON'T TIGHTEN EXCESSIVELY AS THE METER CAN BE DAMAGED!

U. 2. a. Connect one lead of C64, .005 mfd ceramic disc capacitor, to one of the solder lugs on the mounting foot of TS49 (S), connect the other lead to the nearest solder lug on one of the meter terminals (NS).

b. Connect one lead of C65, .005 mfd ceramic disc capacitor, to the remaining solder lug on the mounting foot of TS49 (S), connect the other lead to the remaining solder lug on the meter terminal (NS).

c. Wind two more 19 turn chokes using enamelled wire and the wood dowel furnished. Connect one of the chokes between one of the outside terminals of TS49 (NS) and the corresponding solder lug on the meter mounting studs(S). Connect the other choke between the other outside terminal of TS49 and the remaining solder lug on the meter mounting studs (S).

3. (✓) Attach two 5/8" 4-40 screws to the panel in the positions shown in Figure AL. Place a shakeproof washer and 4-40 nut on the front side of the panel.

4. (✓) Remove the temporary legs from the chassis. Remove the knobs.

5. (✓) Place the 3/4" internal shakeproof washer over the planetary bushing and bring the panel to position on the chassis. Make minor adjustments of bushing positions if necessary and secure the panel to the 3/8" bushings with 3/8"-32 nuts. Secure the planetary drive to the panel with the 3/4"-20 nut. If undue strain is noted on the planetary drive coupling as the panel nut is tightened, loosen the coupling set screws (thru the chassis hole) and reposition the planetary drive shaft.

6. (✓) Push the 3/16" metaltex braid, CH10 between the panel strips and flange as shown in Figure AM and between the panel flange and the chassis bottom edge. Start at the middle of the top panel flange and push the braid in place with a screwdriver, taking care to train the braid fully and smoothly around the corners for good electrical seal. Cut off any excess after the braid has been brought completely around and butt the end to the starting point.

7. (✓) Cut to length and connect the red lead from SW5, the meter switch to terminal 1 (nearest the center of the panel) of TS49 (S).

8. (✓) Connect the black lead from SW5 to terminal 3 (furthest from the center of the panel) of TS49 (S).

9. (✓) Make up two pilot light sockets X11 and X12 as shown in Figure AO. Tighten the nuts to the point where the insulated tubing begins to compress. Jam the solder lug tightly with the second nut at each socket. Place a #51 lamp in each socket after assembly.

10. (✓) Cut the leads to 5/8" and connect C~~96~~ 103 and C~~97~~ 104, both .005 mfd ceramic disc capacitors, to X11 and X12 as follows:

a. Connect one lead of C~~96~~ 103 to the solder terminal of X11 (NS).

b. Connect one lead of C~~97~~ 104 to the solder terminal of X12 (NS).

c. Connect the remaining lead of C~~96~~ 103 to the shell of the pilot light socket X11 just beyond the barrel rib (S).

d. Connect the remaining lead of C~~97~~ 104 to the shell of the pilot light socket X12 just beyond the barrel rib (S).

11. ( ) Prepare the dial plate as shown in Figure AP per the following steps:

a. Fasten the dial plate D5, to the inside of the escutcheon D4 as shown with the two jewels, D9A and D9B held by 9/32"-27 nuts on each jewel, tighten against D5.

b. Place the rubber gasket, D6, around the edge of D4 and cut off any excess. The ends of the gasket should meet at the bottom center of D4.

U. 11. c. Cut the rubber light block D7 in two and apply as shown in Figure AP. Pull the backing off and apply adhesive side to the escutcheon. Make certain that there is over 3/16" of clearance between the arc of the escutcheon opening and the light block rubber. The dial pointer will move in this area later.

d. Turn on another 9/32"-27 nut on each of the jewels until the upper surface, viewed from inside the escutcheon, of the nut is just 1/32" below the level of a straight edge held across the gasket of D4.

e. Place a 4-40 nut on each of the 9/16" screw extensions on the front panel. Turn each nut on until the front surface of the nut is exactly 5/16" from the surface of the panel.

12. Place the dial pointer, D8 over the planetary drive sleeve. The rivet head at the tip of the pointer should be outward. Leave 1/32" clearance between the 3/4" bushing on the planetary drive and the pointer hub. Secure the hub to the sleeve with the pointer on the left side. Drop the pointer below the horizontal by exactly the length measured in step S14. (This is the correct position with C1 at the counterclockwise stop.) Thus, when the pointer is exactly horizontal, C1 will be completely meshed.

13. Place the dial assembly in psoition on the panel and secure it in place with 4-40 nuts over the 5/8" 4-40 screws. Secure the dial assembly at the top left with a 9/32"-27 nut at the rear of the panel on the left jewel.

14. Place the pilot light bracket I3B and a 9/32"-27 nut at the rear of the panel on the right hand jewel. Place a 6S6 lamp in the socket.

15. Make the following harness connections:
   a. Connect 67A black to either of the lugs of the pilot light bracket X13 (S).
   b. Connect 68A white to the remaining lug of the pilot light bracket X13 (S).
   c. Connect 66A, green, to terminal 2 (insulated terminal) of TS50 (NS).

16. Connect a 7" #20 green plastic lead from the insulated terminal of TS50 (NS) to the insulated terminal of TS51 (NS).

17. Make two more of the 19 turn chokes from #18 formex insulated wire.

18. Place the pilot light assemblies I1 and I2 in the 5/8" holes on the panel.

19. Connect one choke between the insulated terminal of TS51 (S) and I1 solder lug (S).

20. Connect one choke between the insulated terminal of TS50 (S) and I2 solder lug (S).

21. Inspect all of the chassis carefully, looking for obvious mistakes, unsoldered connections, touching uninsulated leads or omissions. Train any looped leads near the chassis to prevent pickup in the harness and tie any loose leads to the harness with lacing cord or tape. Particularly tie down all transformer leads which are loose.

22. Place a small drop of oil on each condenser, switch, planetary and panel bearing.

V. 1. Refer to section C.2. of the operating manual and install knobs per instructions.

2. Perform the bias adjustments appearing in section C.3. of the operating manual.

3. Perform the clamper adjustment, section C.4. of the operating manual.

V. 4. (✓) Read thru section D.~~3~~2. for the information it contains but do not attempt to perform the tests as these are for a VFO which has been previously calibrated.

5. (✓) Read and perform the VFO calibration procedure, section F.1. thru F.7. of the operating manual.

6. (✓) Perform the operational checks, section C.5. of the operating manual.

7. (✓) Run thru the tuning procedure section D.~~4~~3. of the operating manual.

8. (✓) Perform the neutralization adjustment, section D.~~5~~4. of the manual.

9. ( ) Test the transmitter on AM phone referring to D.~~2~~1. of the manual for connections and D.7. for operating conditions.

After becoming familiar enough with the transmitter to be assured operation is normal, install in cabinet per the following instructions.

CABINET ASSEMBLY

W. 1. ( ) Attach the two rails and the four mounting feet to the bottom of the cabinet as shown in Figure AQ. (The bottom of the cabinet has four holes.) The slanting side of each rail must be toward the outside of the cabinet.

2. ( ) Place a #10 external tooth lockwasher on each of the four tie bolts and insert the tie bolts in the upper holes of the cabinet and thru the support brackets near the front of the cabinet.

3. ( ) Place the back of the chassis on the front of the cabinet rails and slide the chassis into the cabinet, pulling the power cord thru the rear cutout.

4. ( ) Engage the tie bolts in the front panel tapped holes and pull up the tie rods until the panel nearly covers the offset of the front of the cabinet. Secure the chassis to the rear of the cabinet with the 20 1/2" 10-24 truss head screws and eight #10 external tooth shakeproof washers. Draw up the tie bolts until the panel covers the cabinet offset evenly.

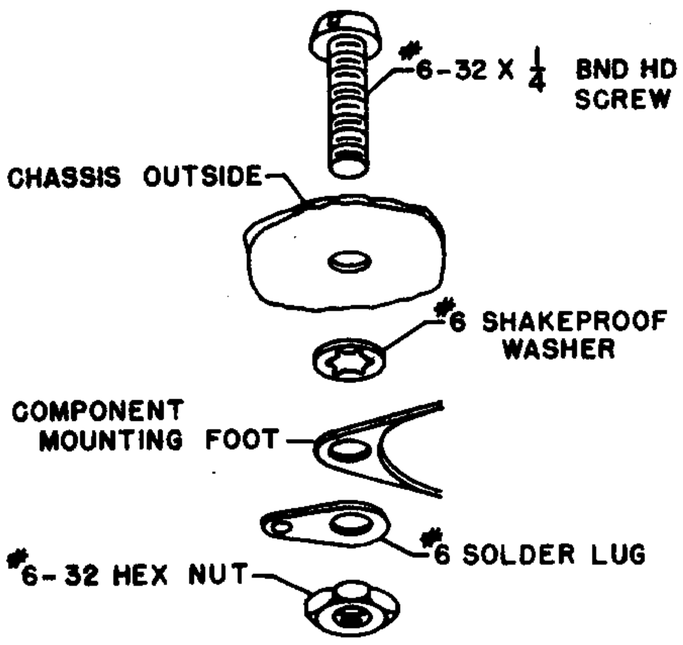

SEQUENCE "A"

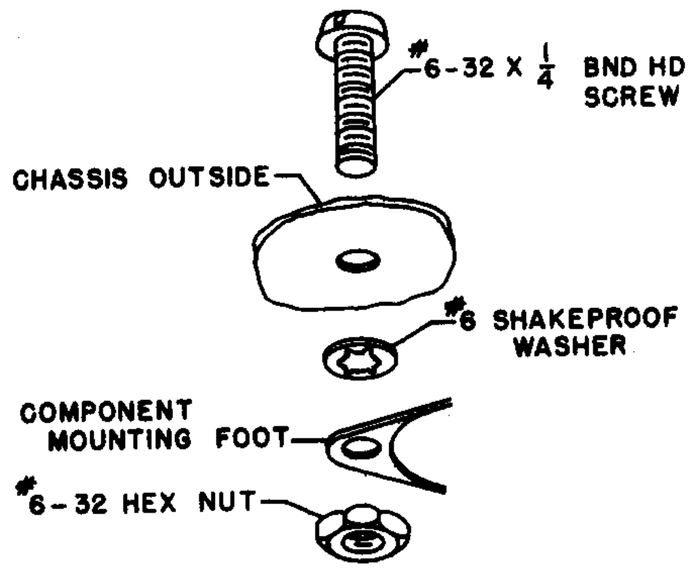

SEQUENCE "B"

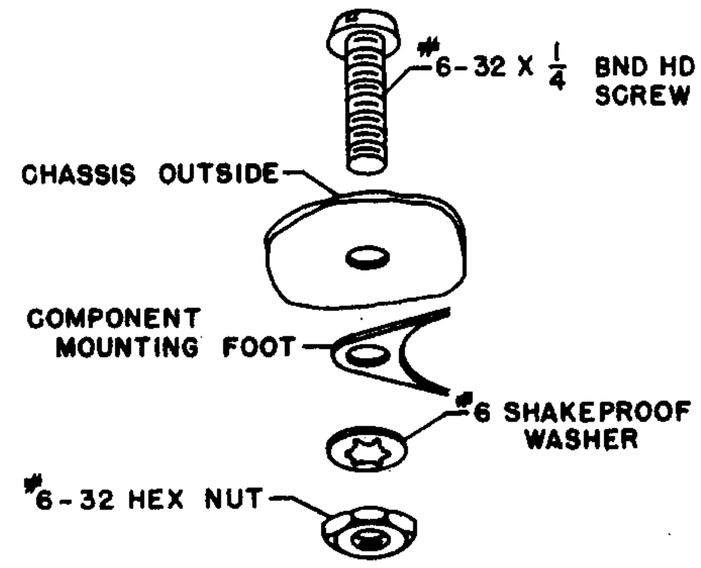

SEQUENCE "C"

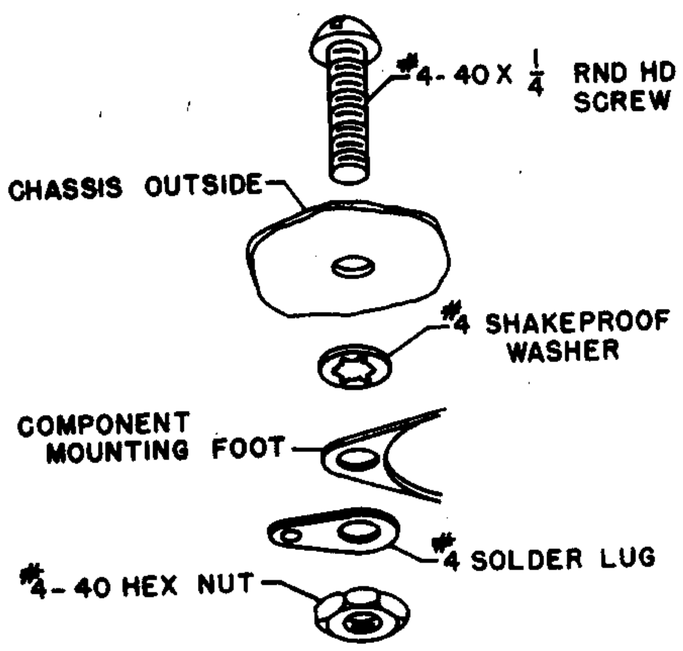

SEQUENCE "D"

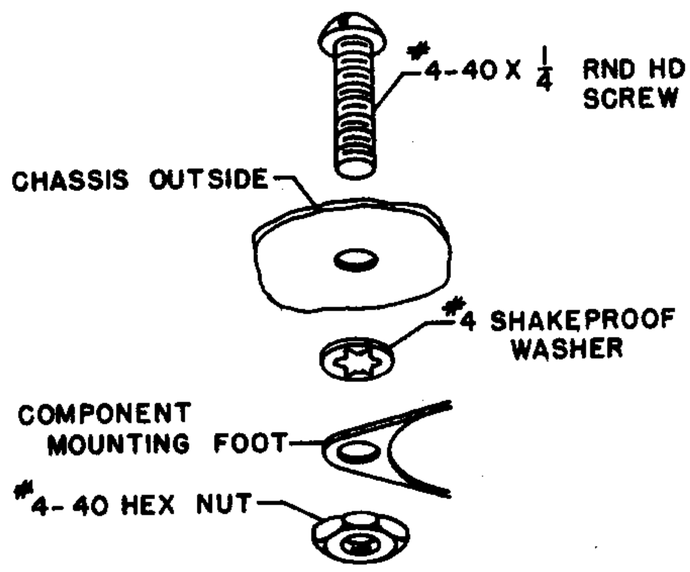

SEQUENCE "E"

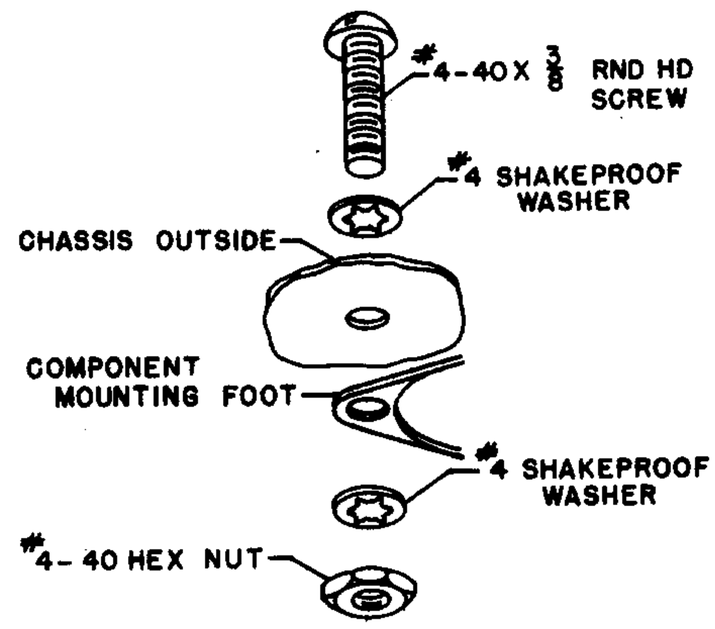

SEQUENCE "F"

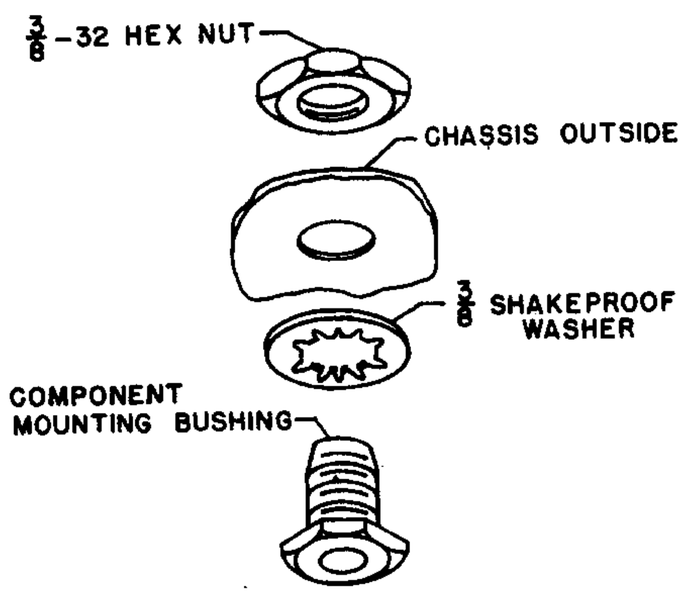

SEQUENCE "G"

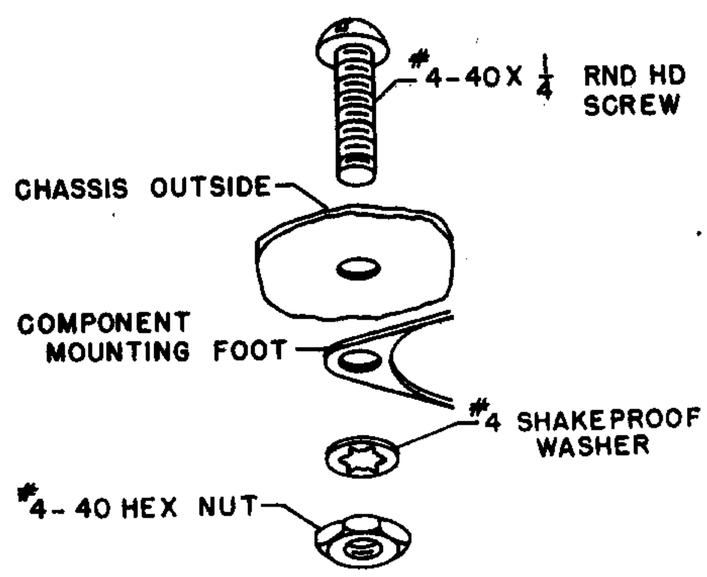

SEQUENCE "H"

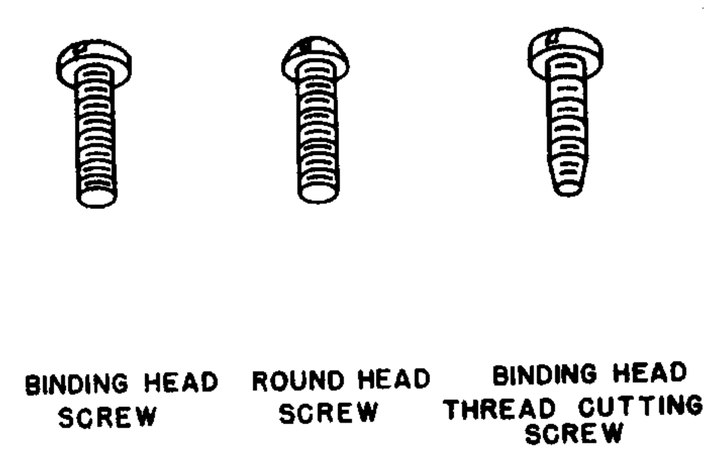

Hardware Sequence

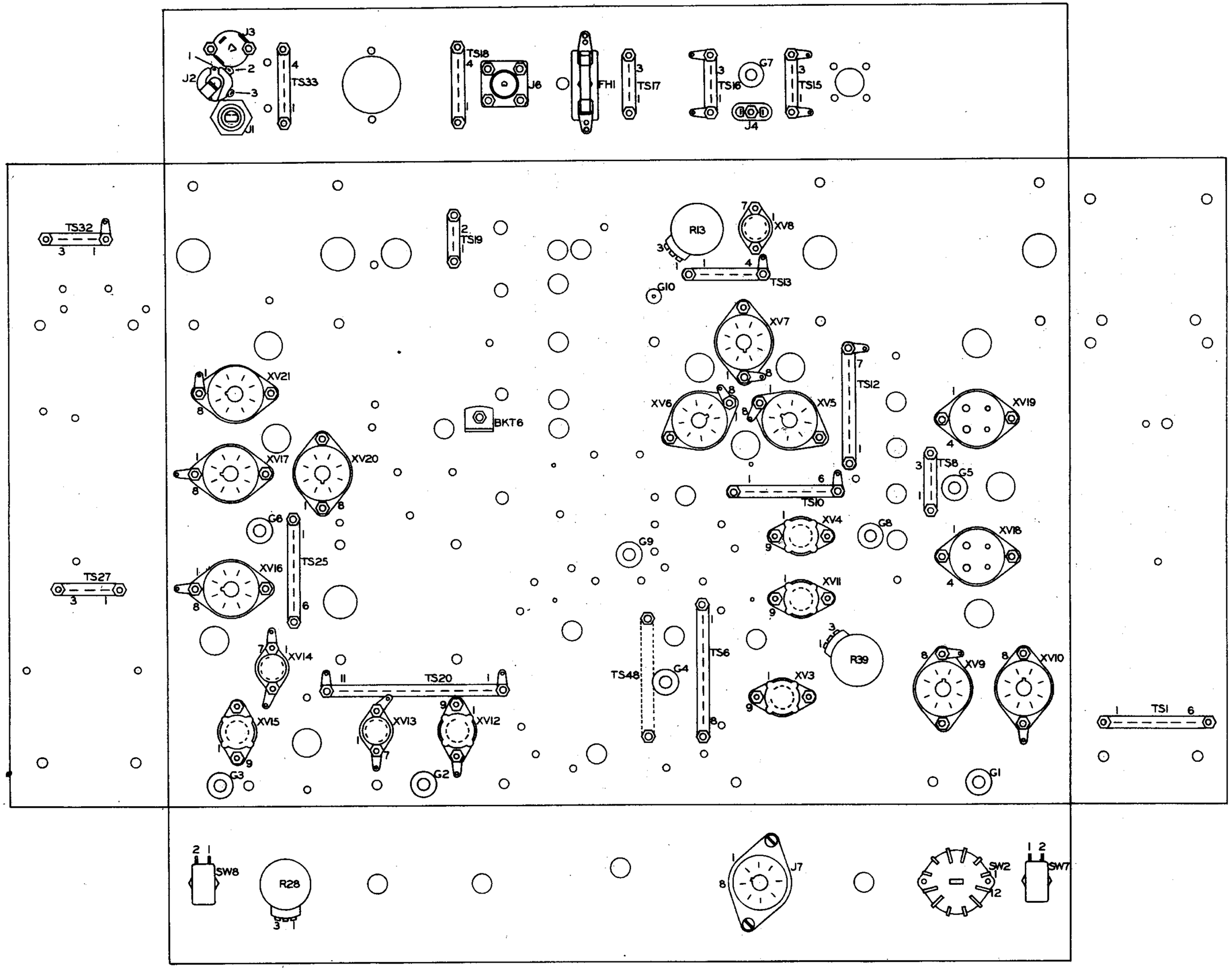
J3
J2
J1
TS33
TS18
J6
FH1
TS17
TS16
G7
TS15
J4
TS32
TS19
R13
XV8
TS13
G10
XV7
XV21
XV6
XV5
TS12
XV19
BKT6
XV17
XV20
TS8
G5
TS10
G6
XV4
G8
XV18
G9
TS25
XV16
XV11
TS27
R39
XV14
TS20
TS48
G4
TS6
XV9
XV10
XV3
XV15
XV13
XV12
TS1
G3
G2
G1
SW8
R28
J7
SW2
SW7

Figure A

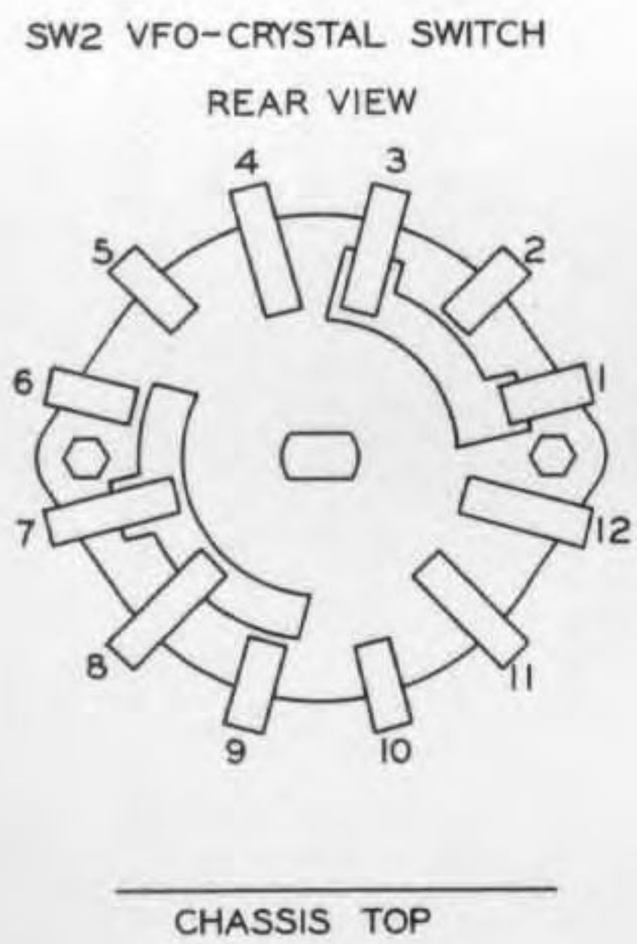

Figure B

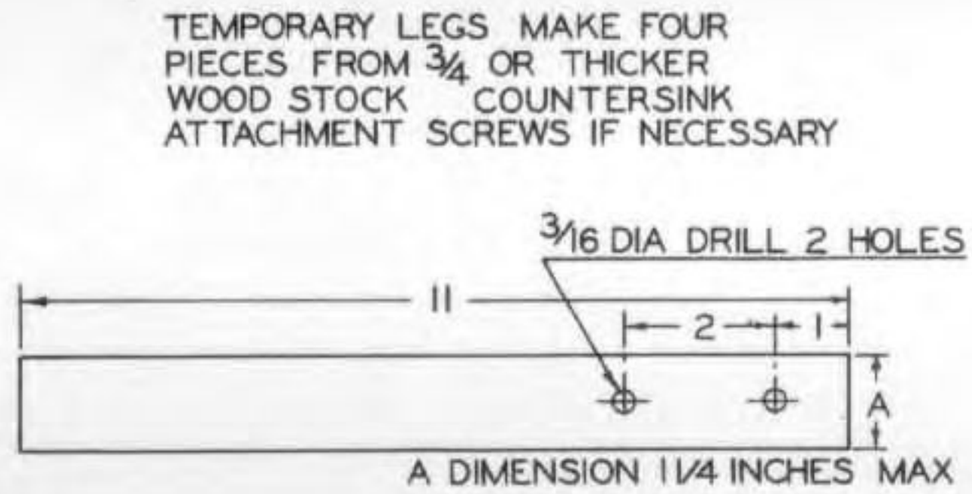

Figure C

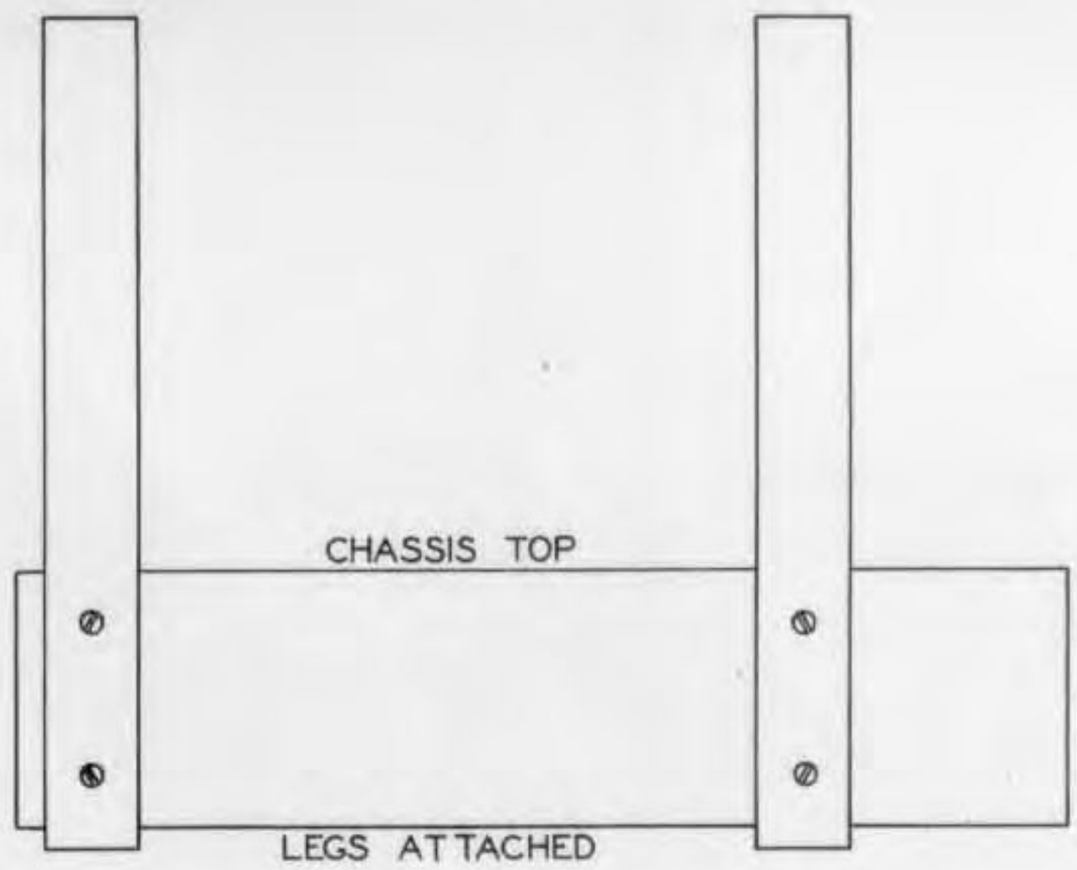

Figure D

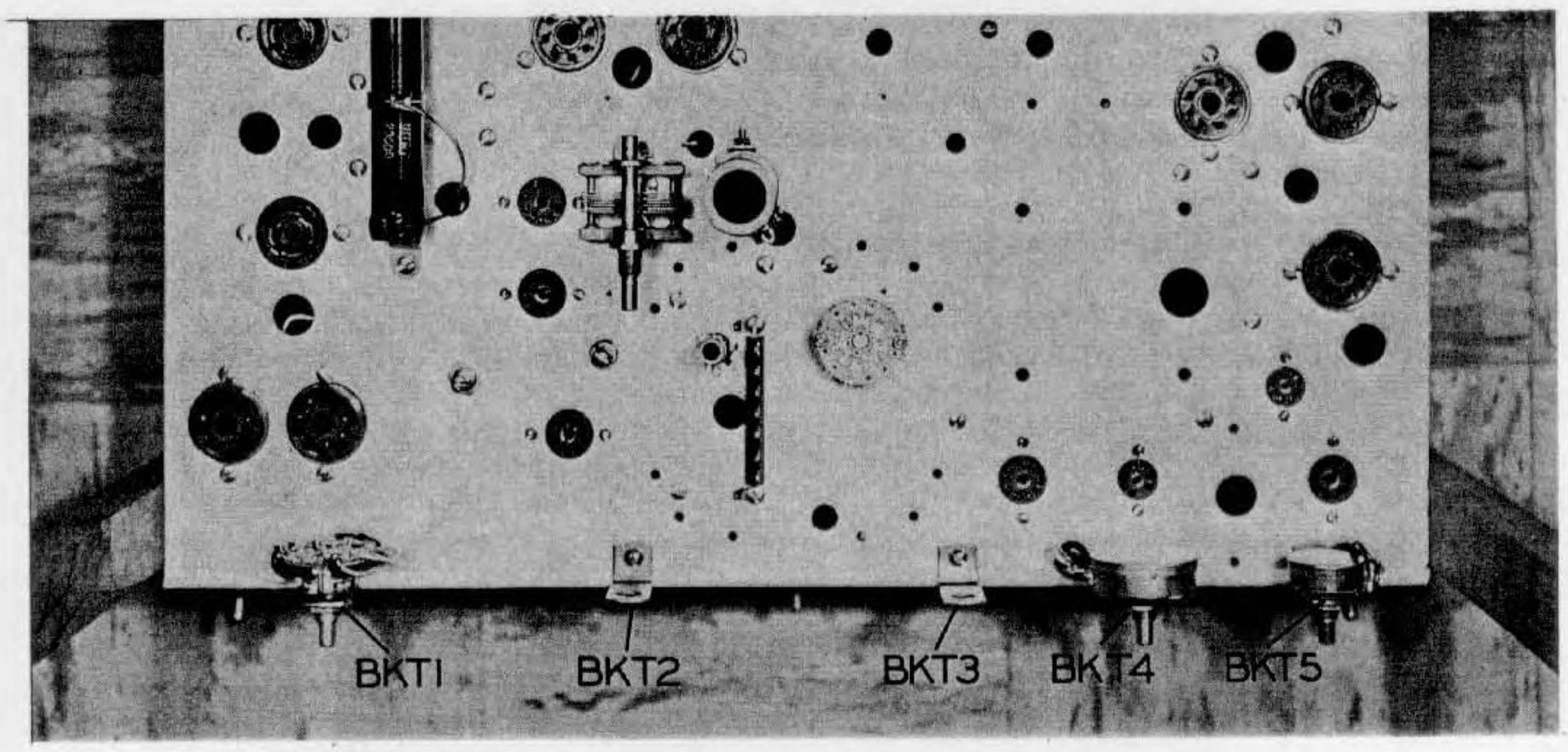

Figure E

Figure F

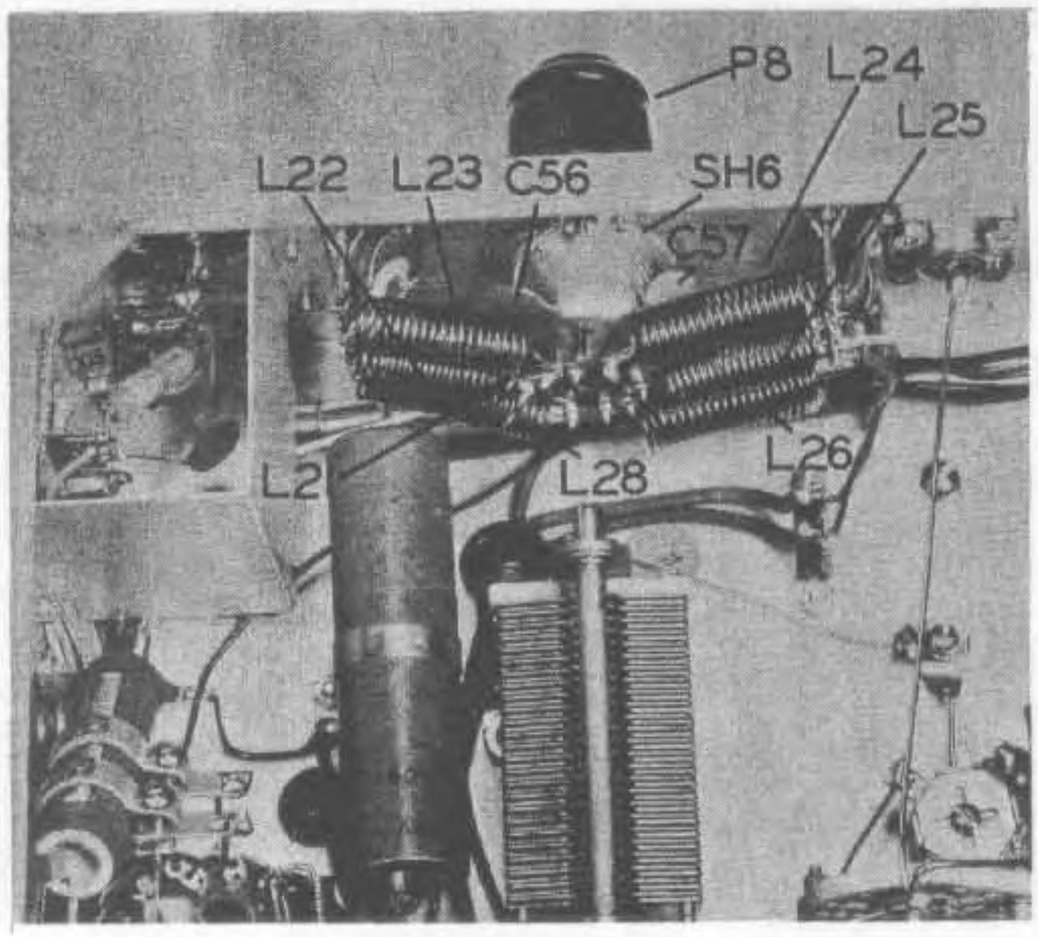

Figure G

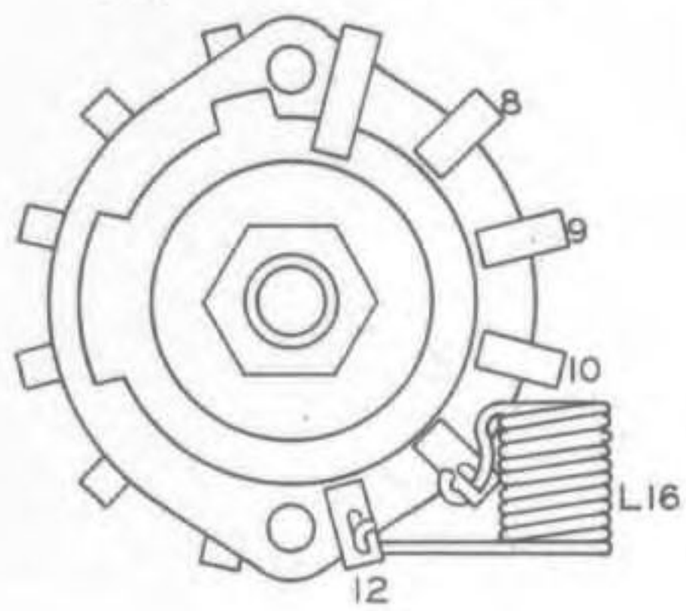

Figure H

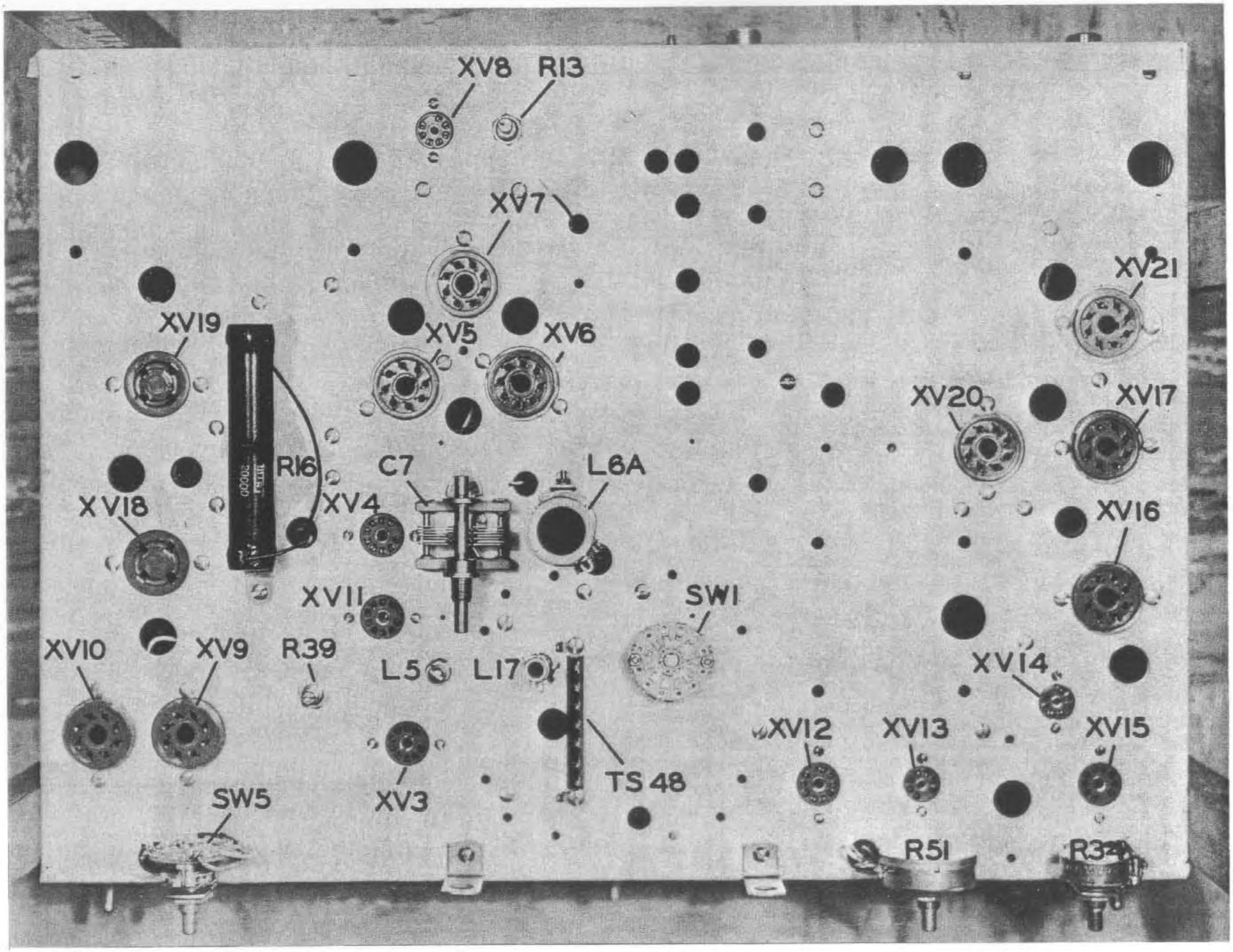
XV8
R13
XV7
XV21
XV19
XV5
XV6
XV20
XV17
R16
C7
L6A
XV18
XV4
XV16
XV11
SW1
XV10
XV9
R39
L5
L17
XV14
XV12
XV13
XV15
TS 48
SW5
XV3
R51
R34

Figure 1

SW1 VFO BANDSWITCH

TOP VIEW

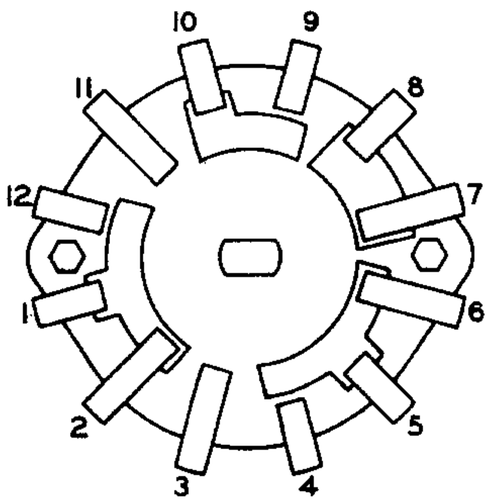

FRONT OF CHASSIS

Figure J

SW3 BANDSWITCH

CHASSIS TOP

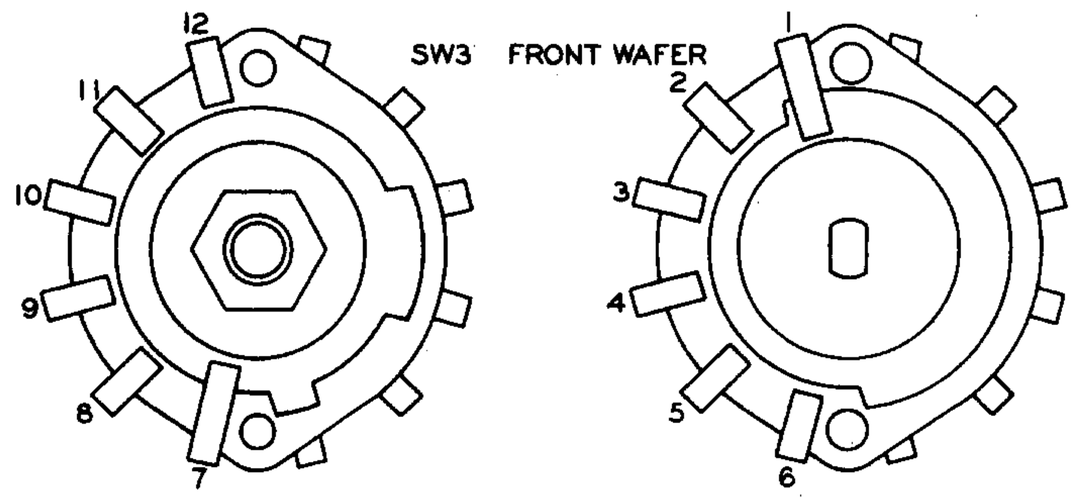

FRONT VIEW REAR VIEW

CHASSIS TOP

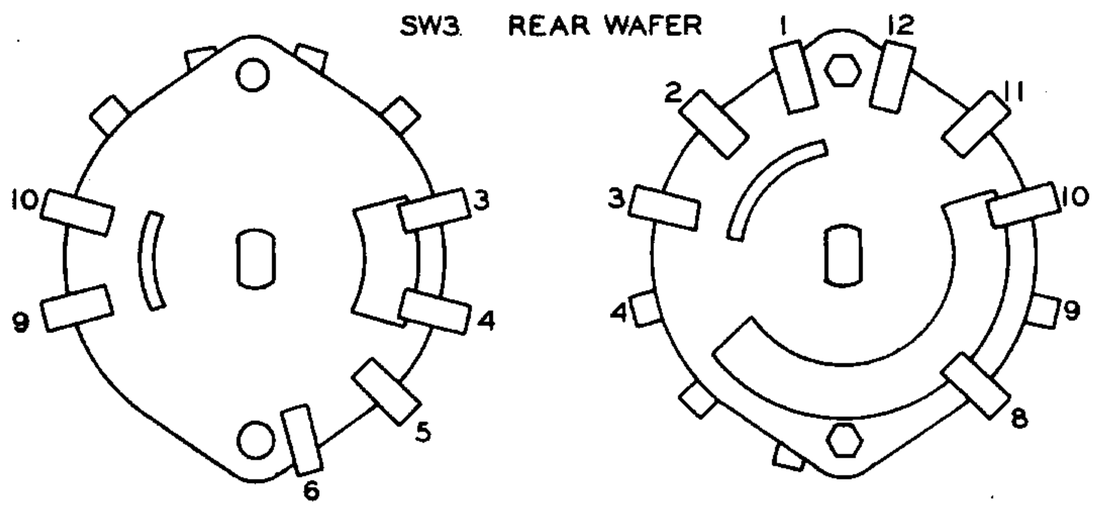

FRONT VIEW REAR VIEW

Figure K

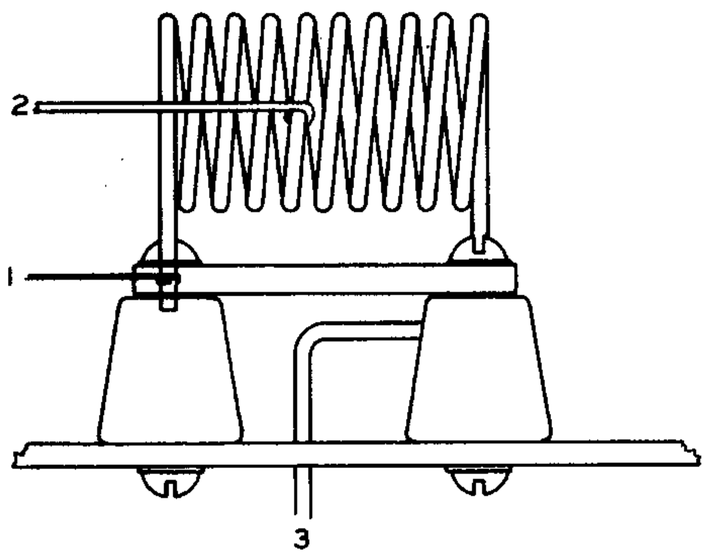

COIL L6B

Figure L

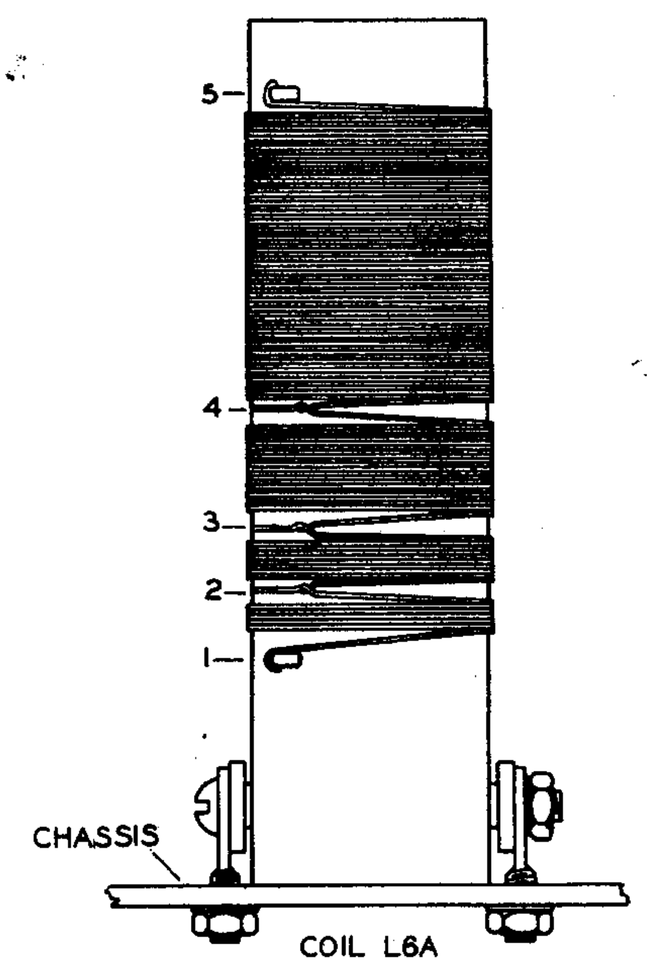

COIL L6A

Figure M

SW5 METER SWITCH

REAR VIEW

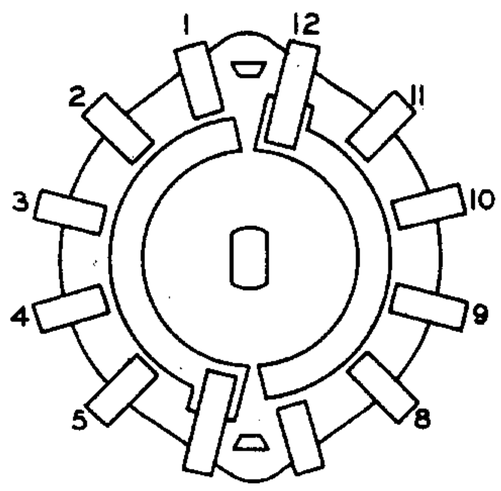

CHASSIS TOP

Figure N

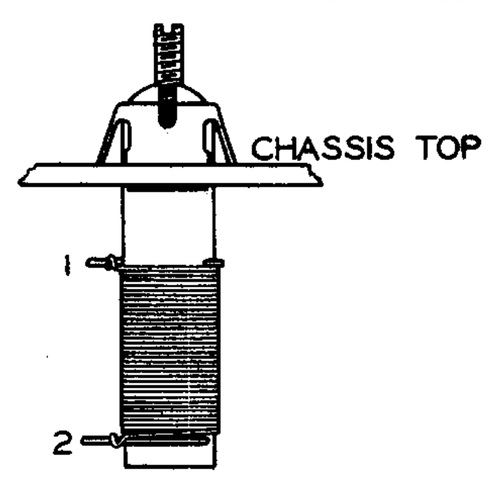

COIL L17

Figure O

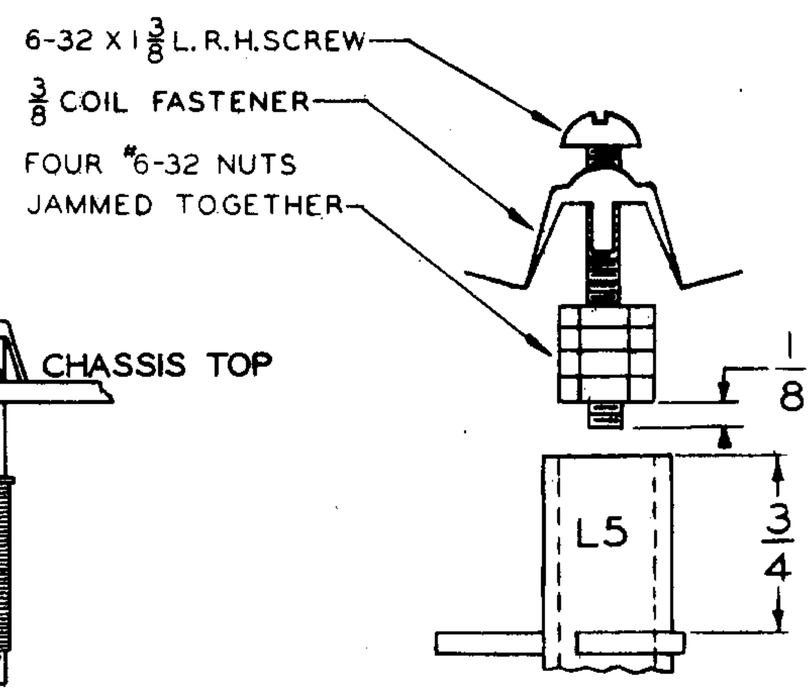

OSC. COIL L5

FASTENER ASSEMBLY

Figure P

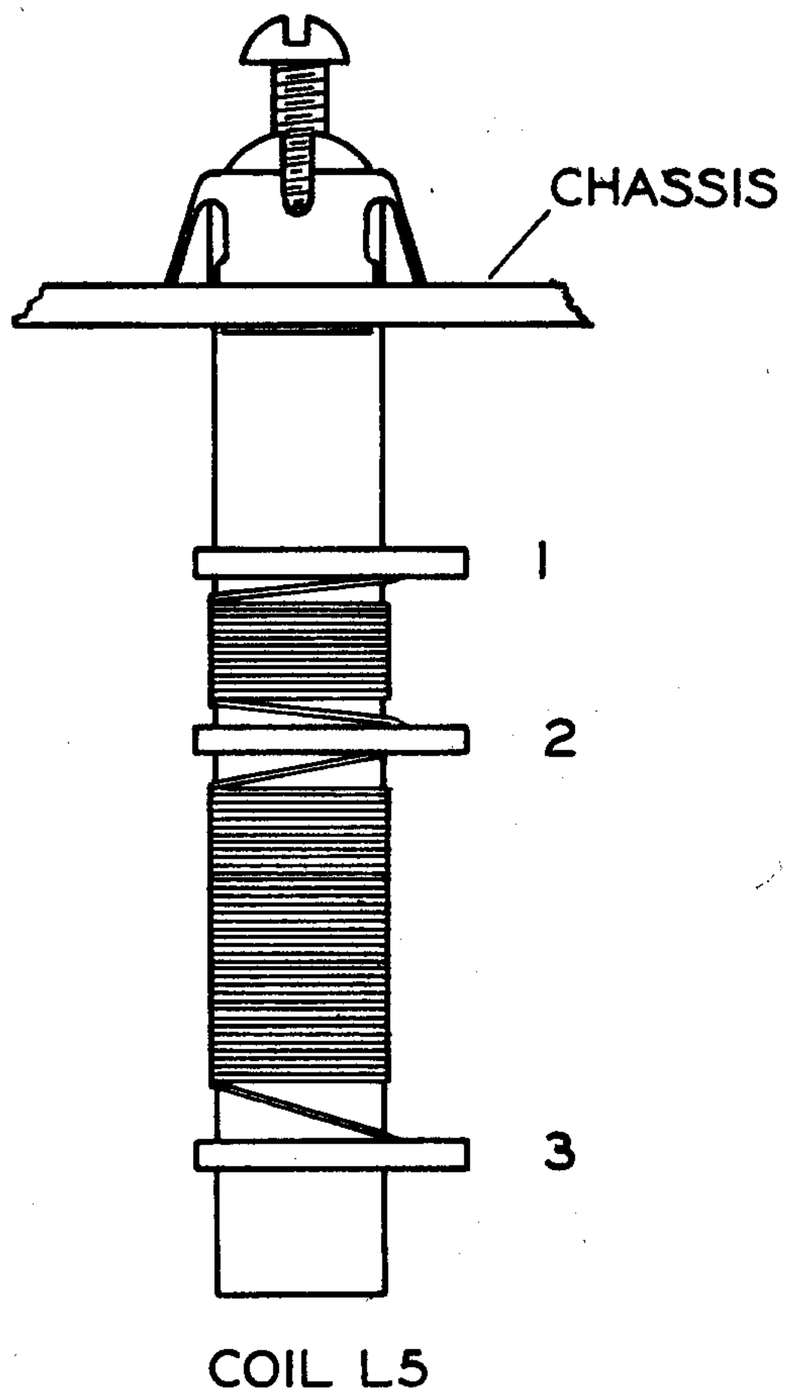

Figure Q

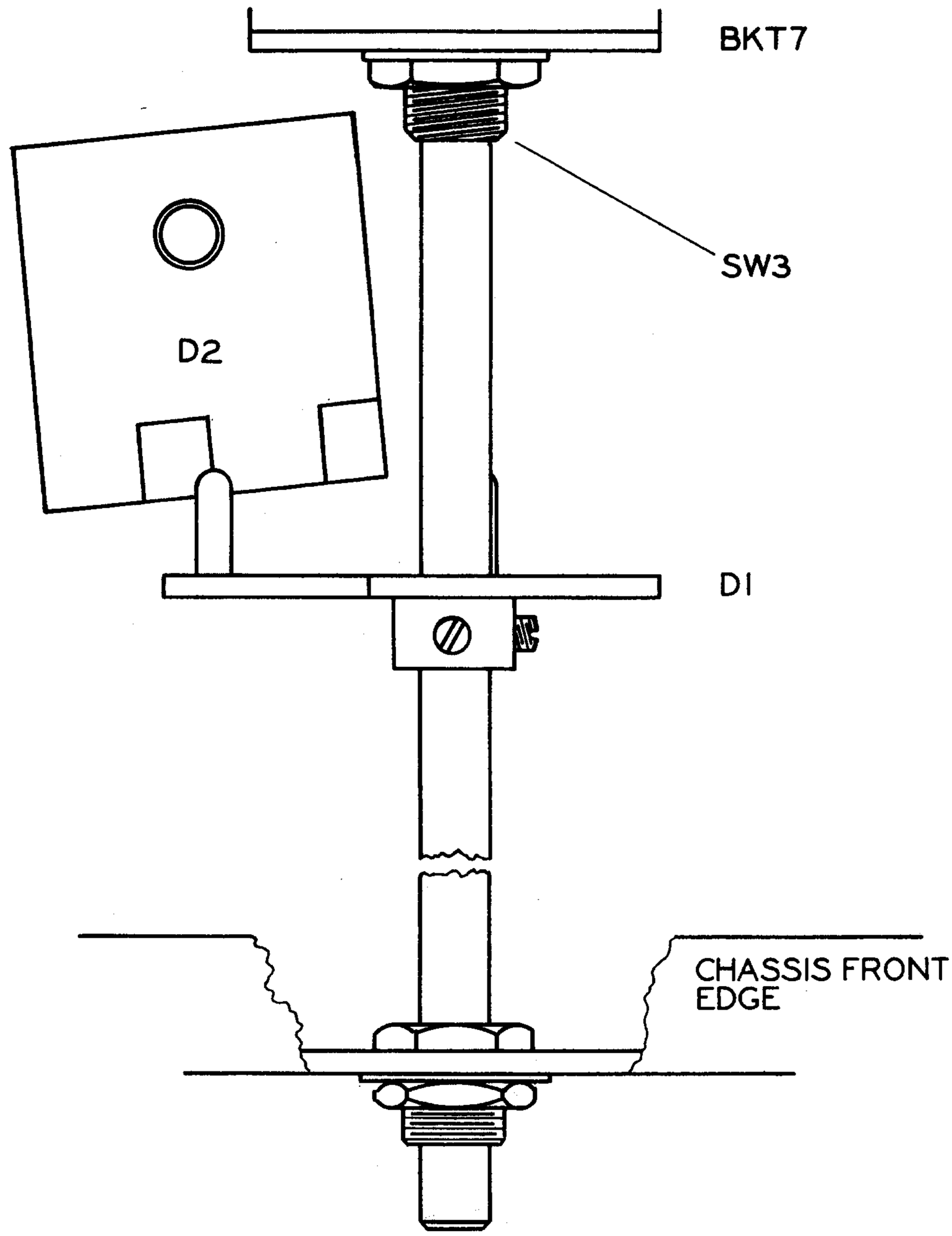

Figure R

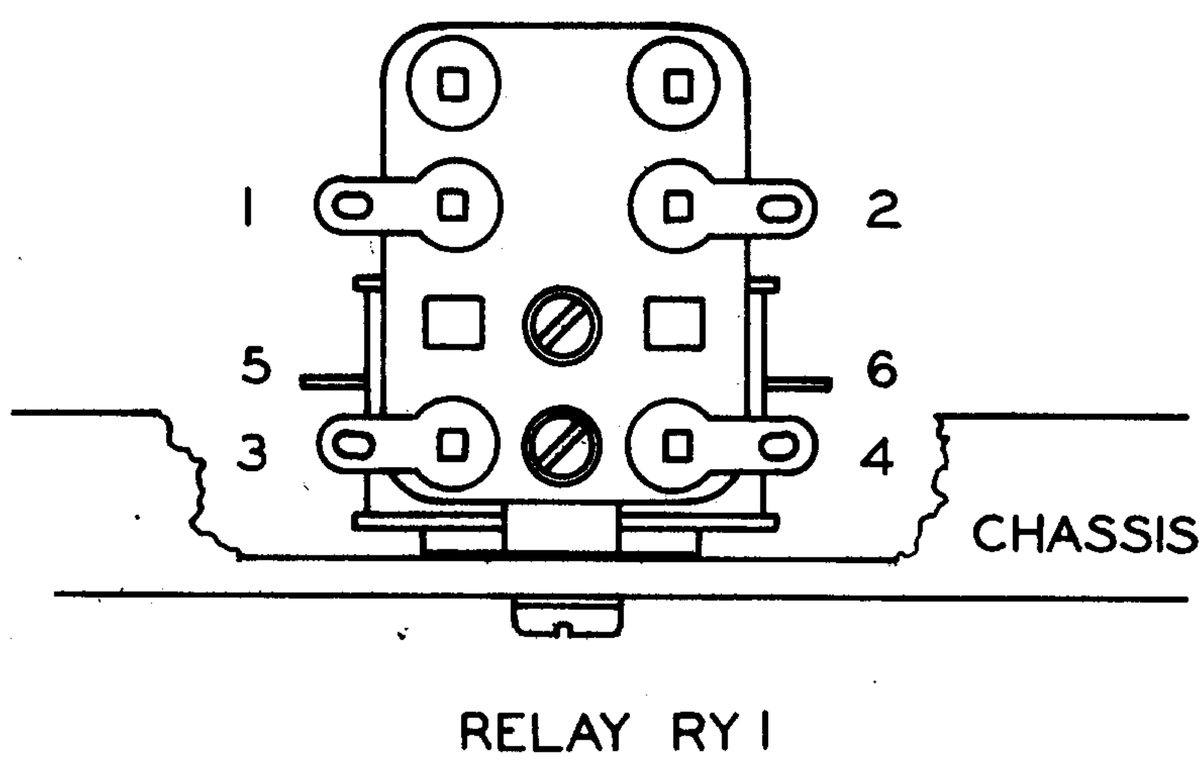

Figure S

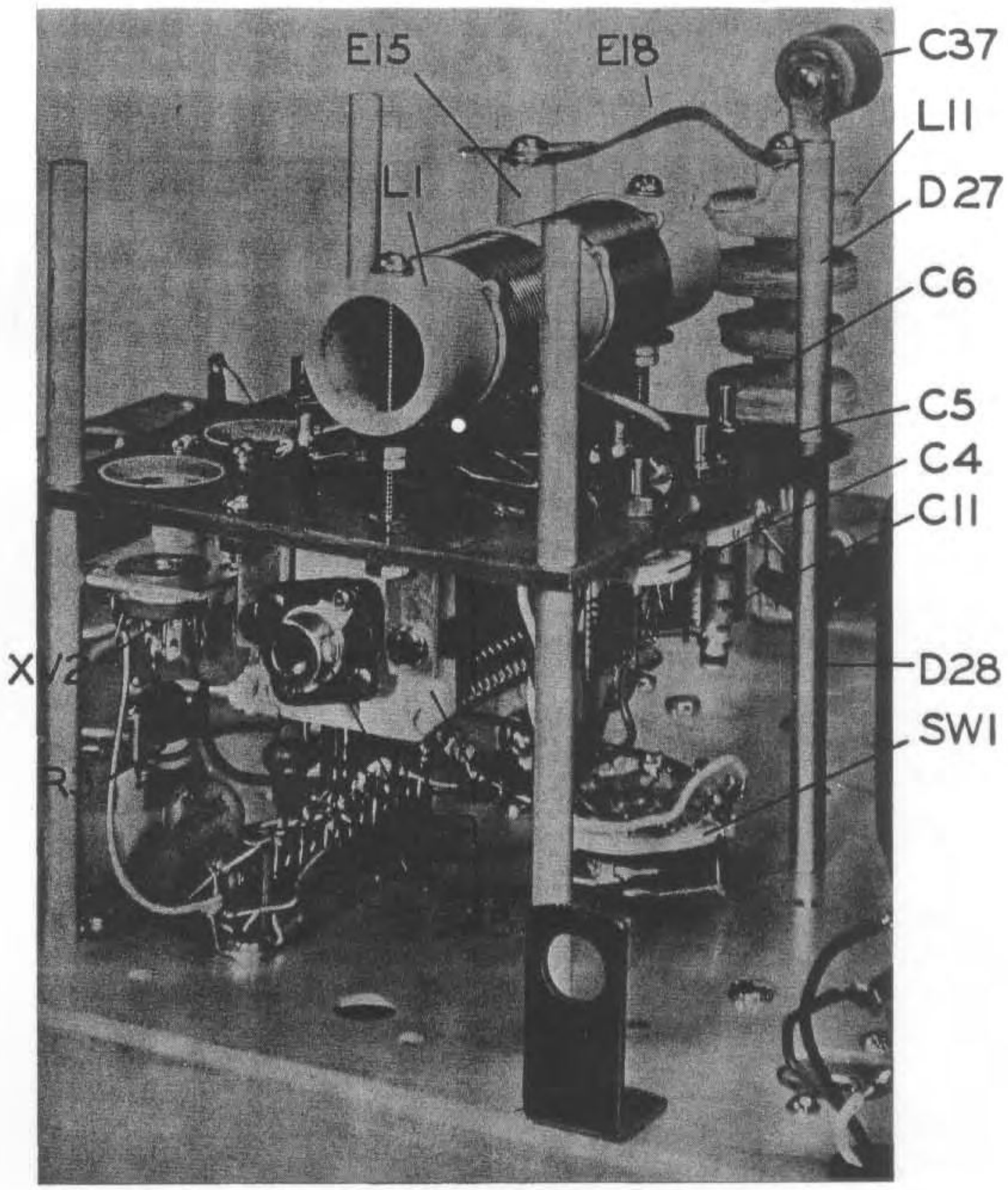

Figure T

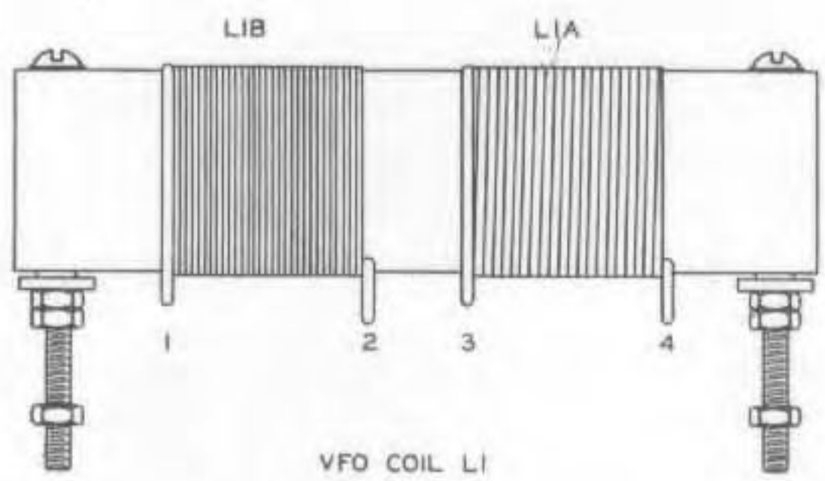

Figure U

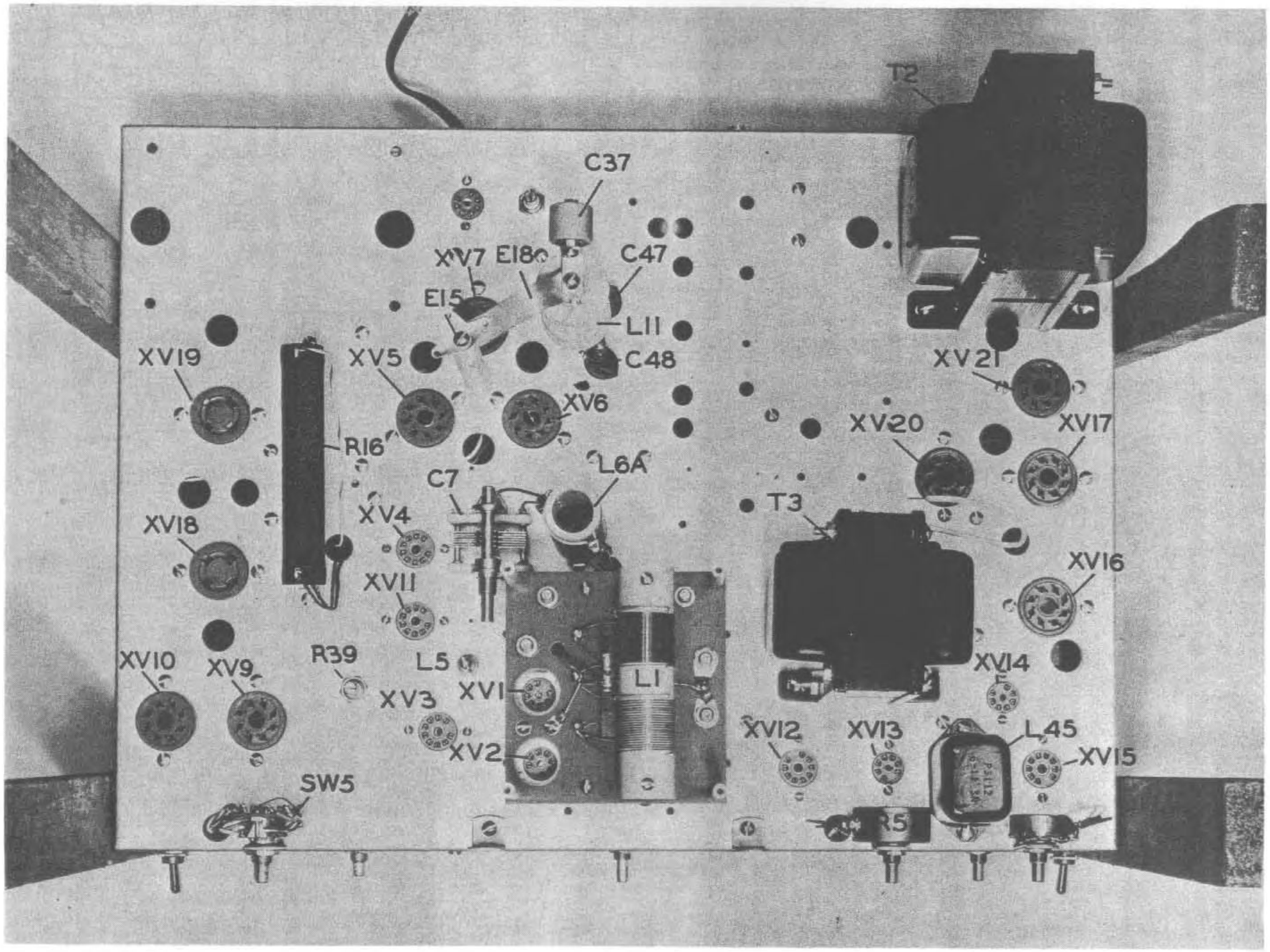
T2
C37
XV7
E18
C47
E15
L11
XV19
XV5
C48
XV21
XV6
XV20
XV17
R16
L6A
C7
T3
XV18
XV4
XV16
XV11
XV10
XV9
R39
L5
XV14
XV3
XV1
L1
XV12
XV13
L45
XV2
XV15
SW5
R5

Figure V

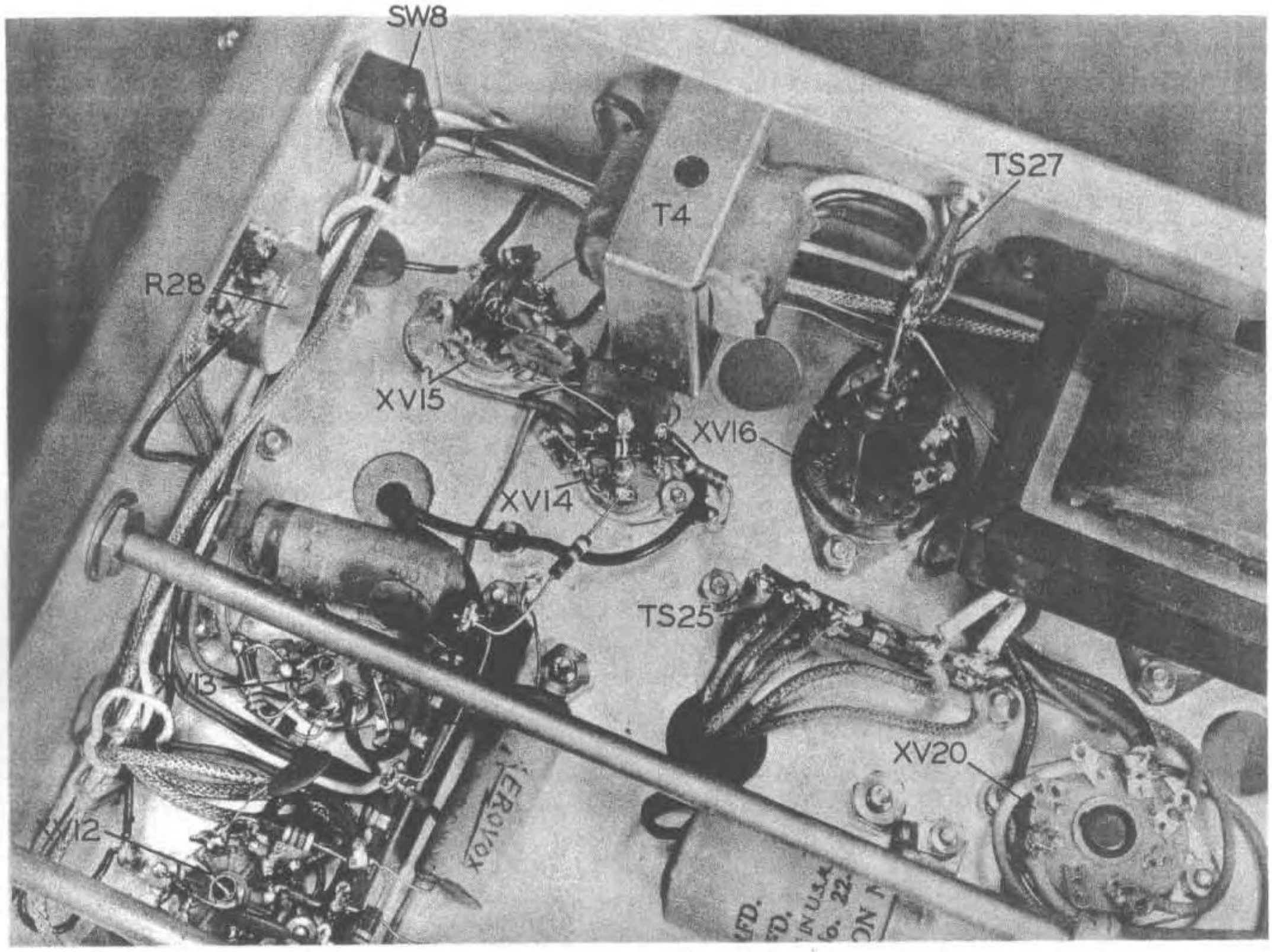

Figure X

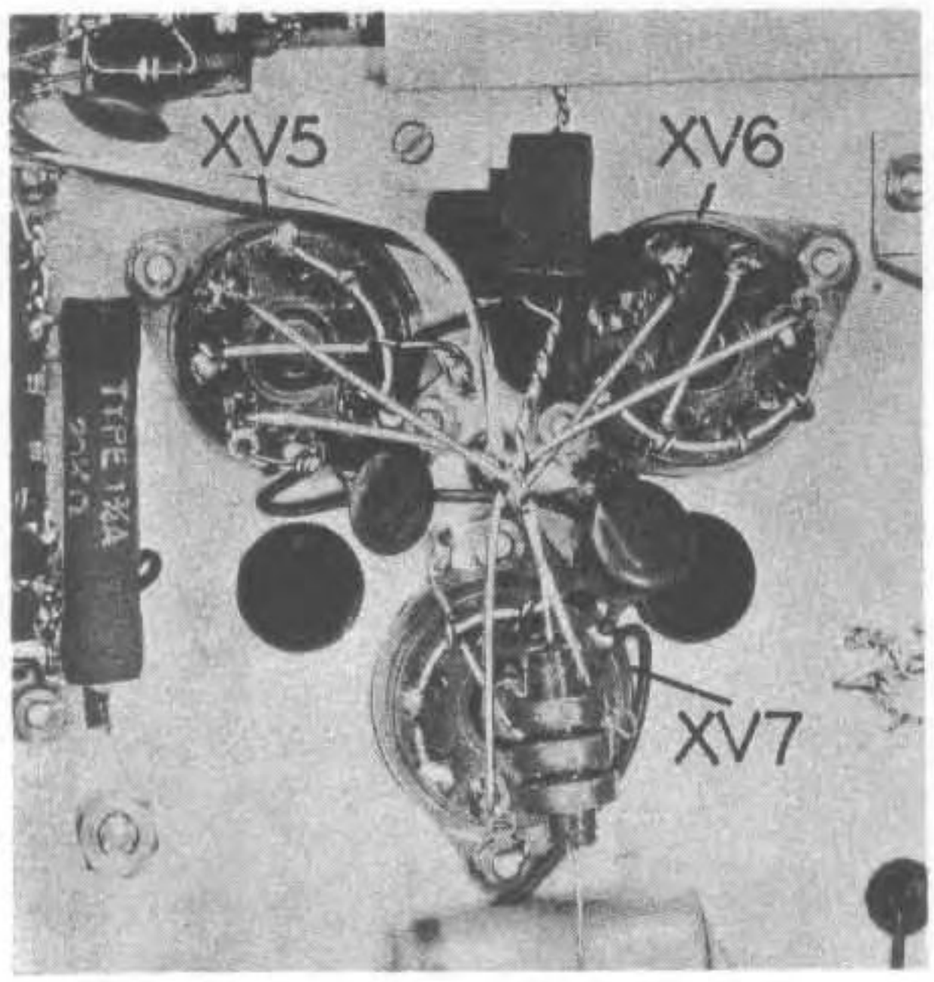

Figure Y

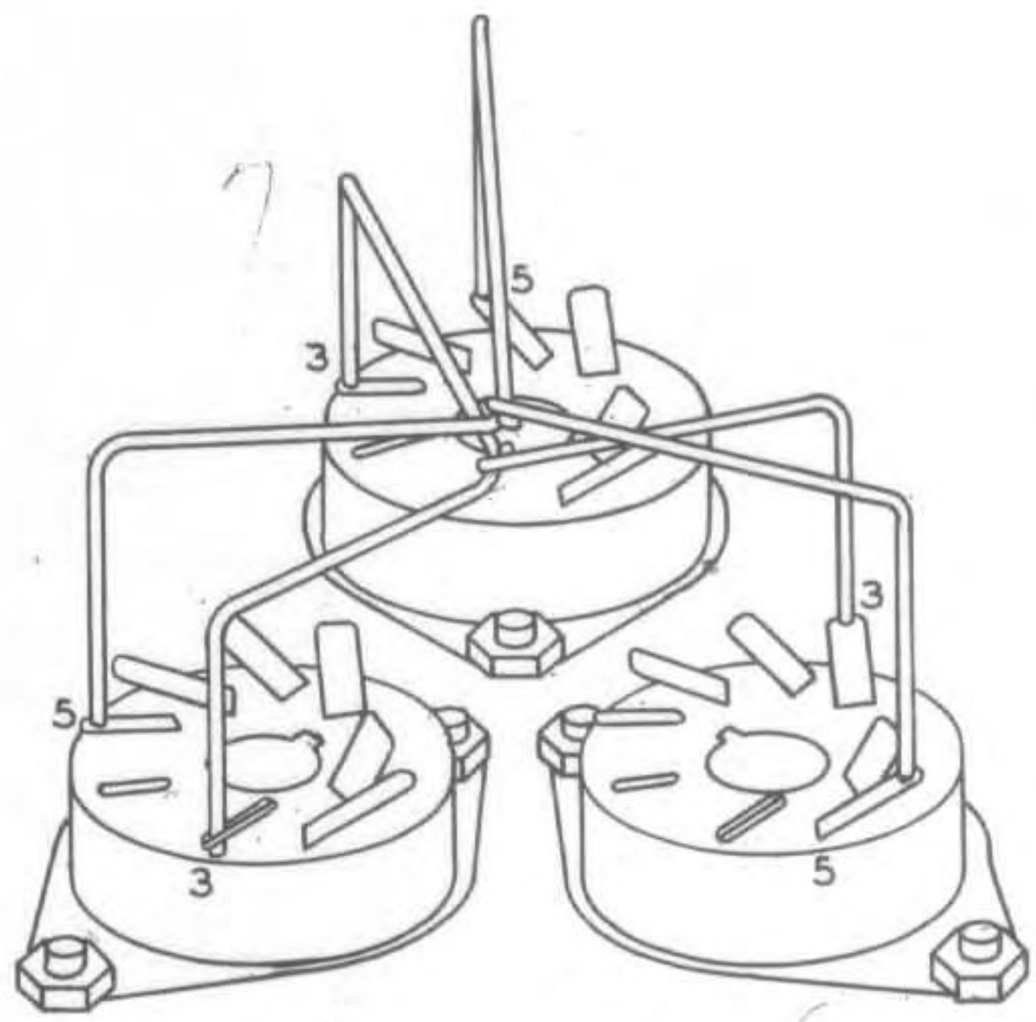

Figure Z

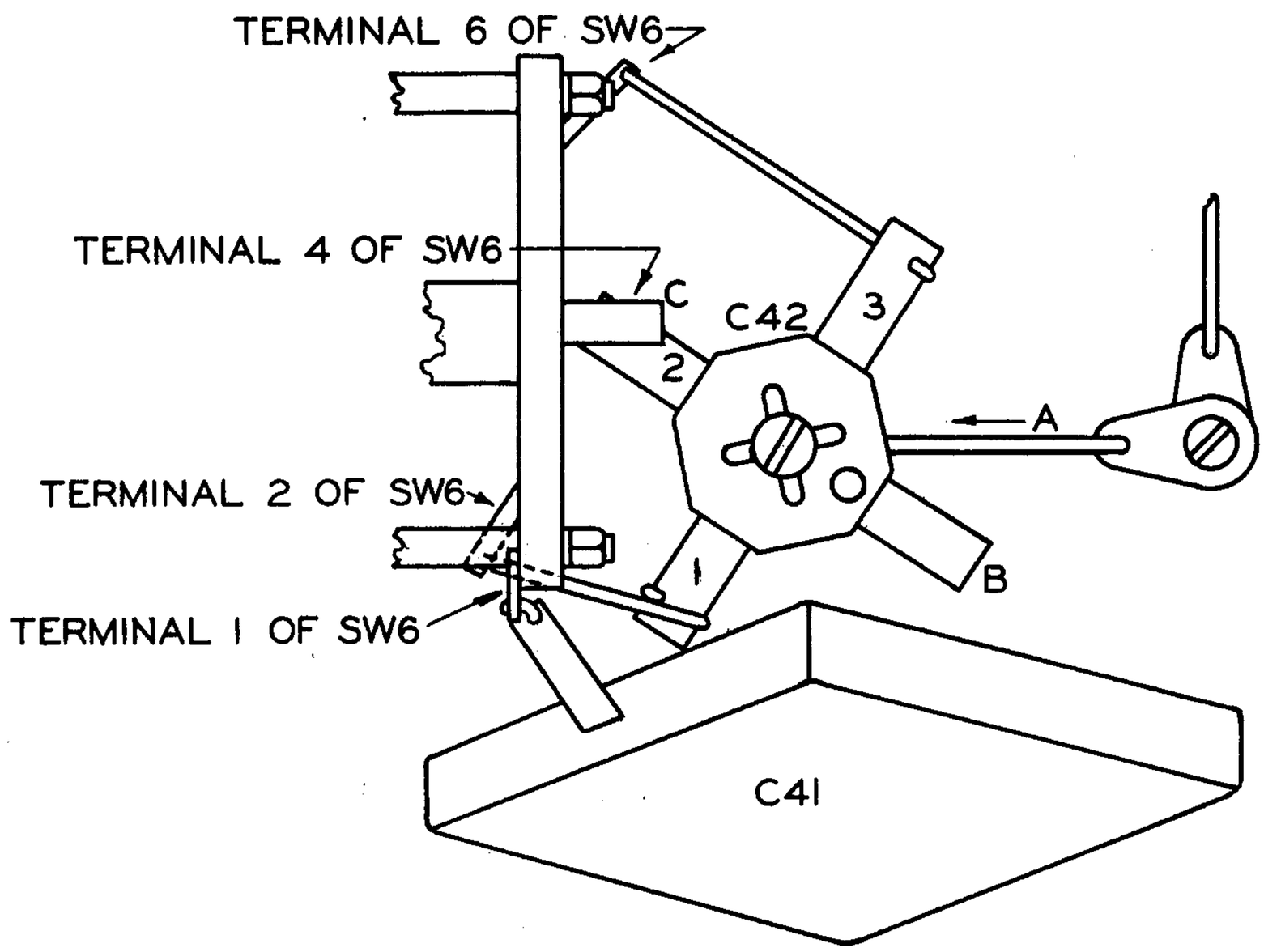

← A SOLDER TO GROUND LUG UNDER C42 POST
B SOLDER TO NO. 10 LUG UNDER C42
C SOLDER 4 OF SW6 TO 2 OF C42

Figure AE

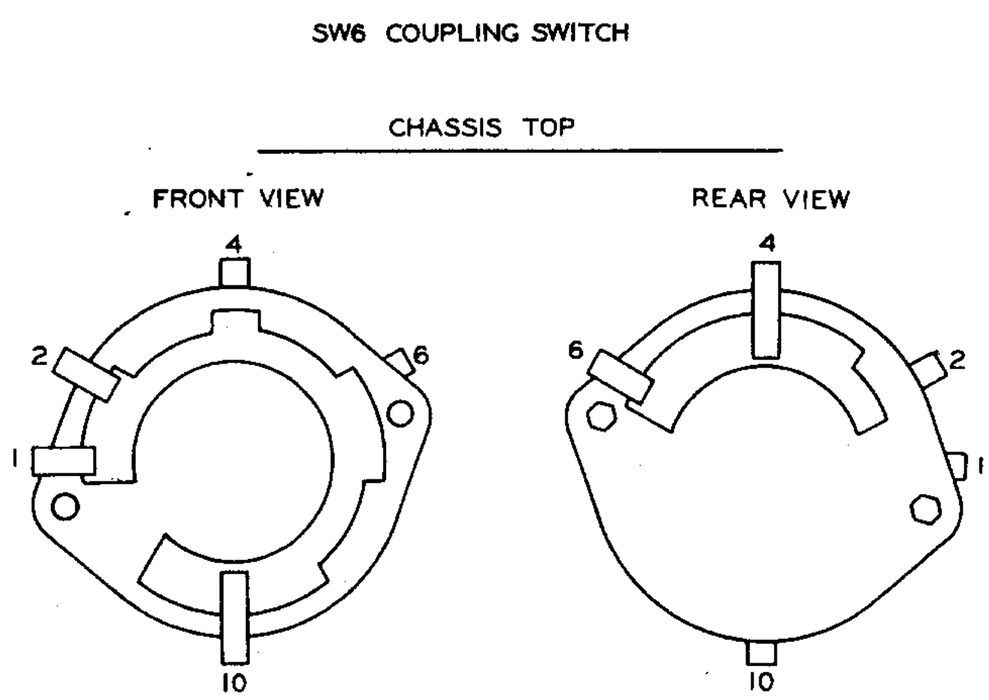

Figure AF

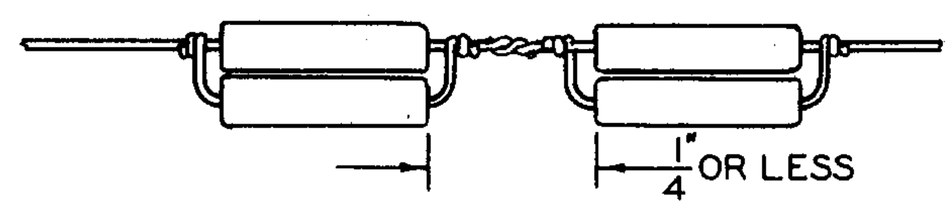

Figure AG

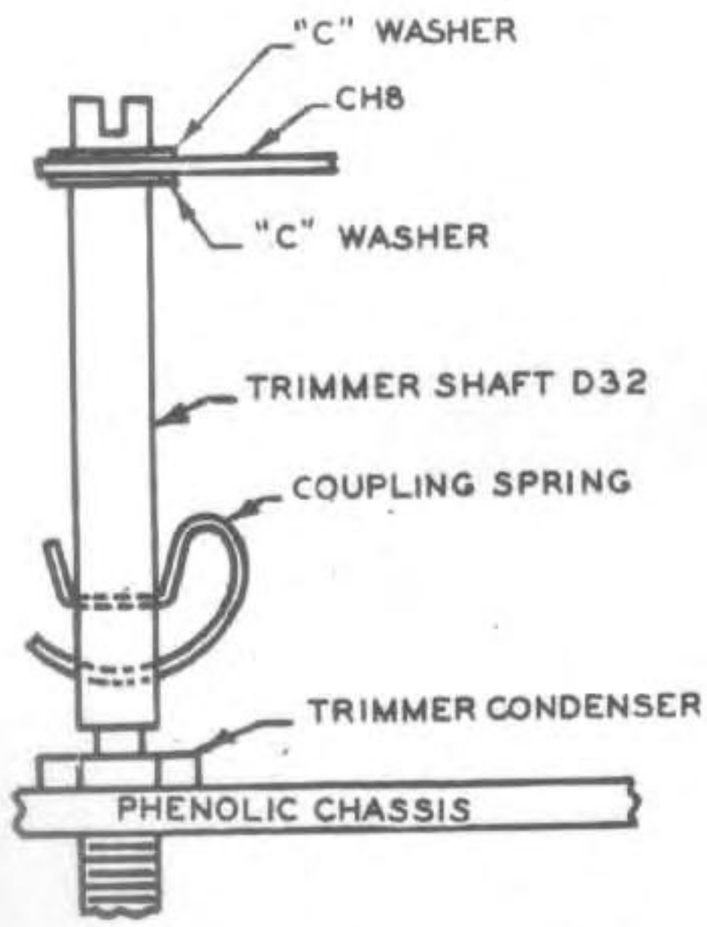

V.F.O. TRIMMER
SHAFT ASSEMBLY

Figure AH

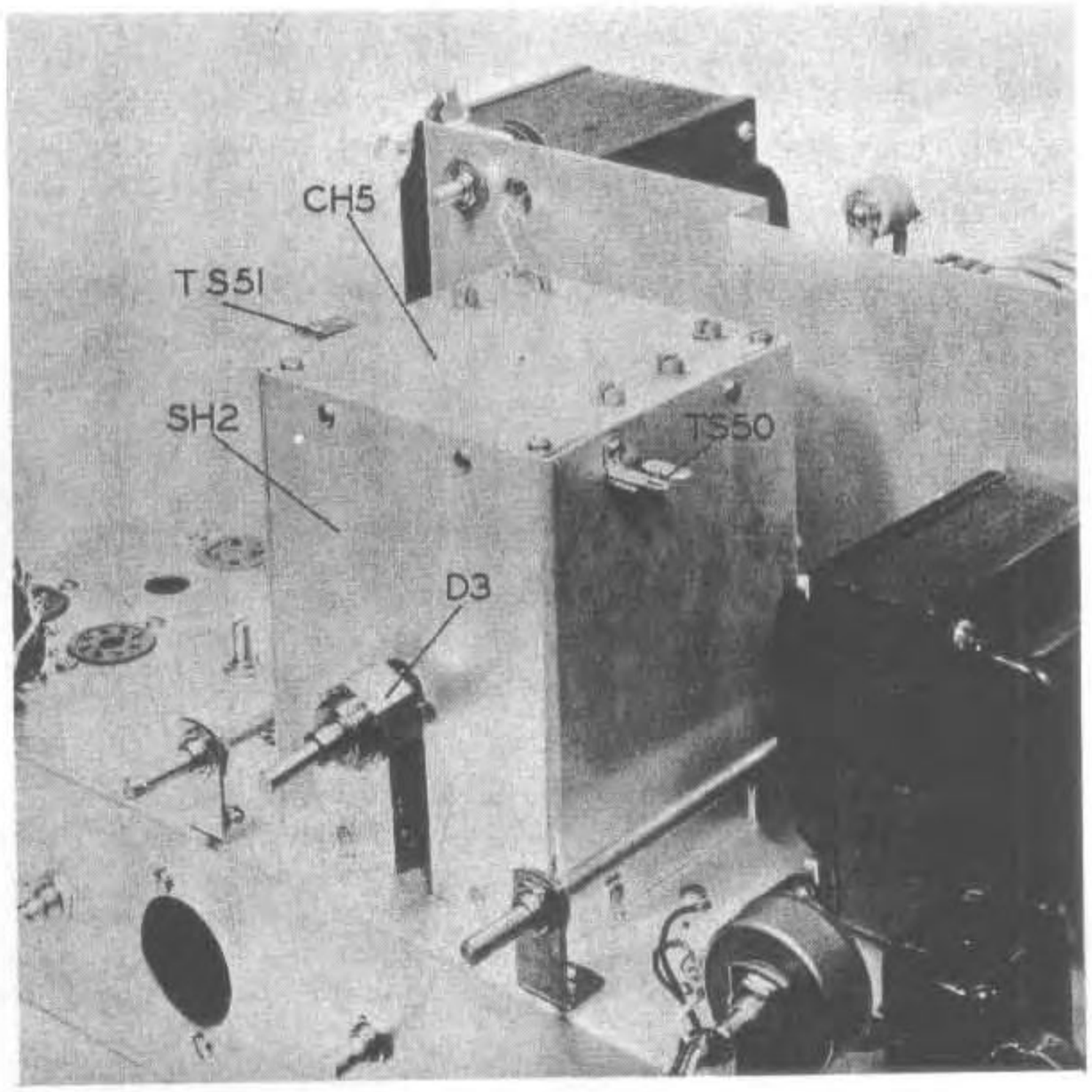

Figure AI

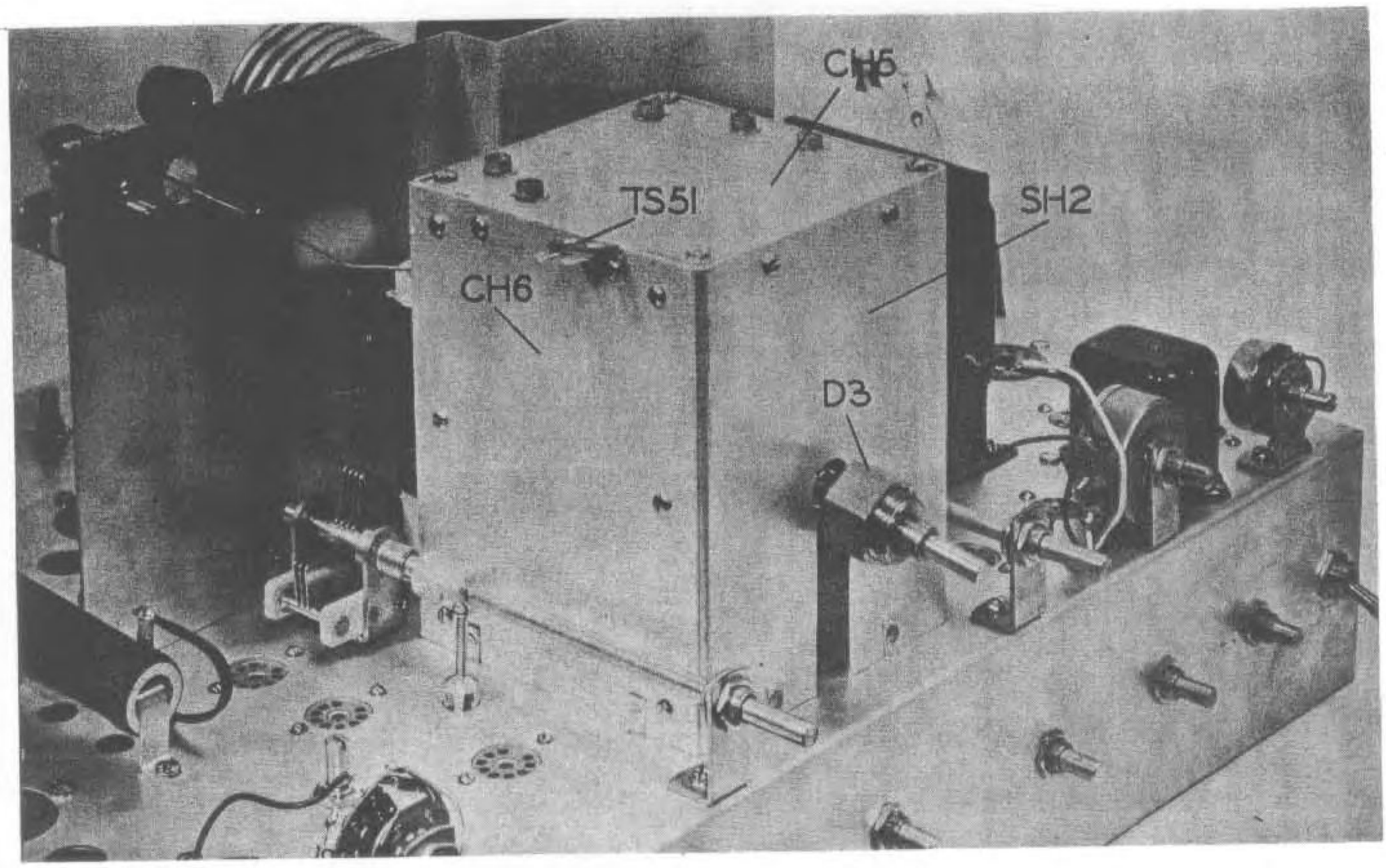

Figure AJ

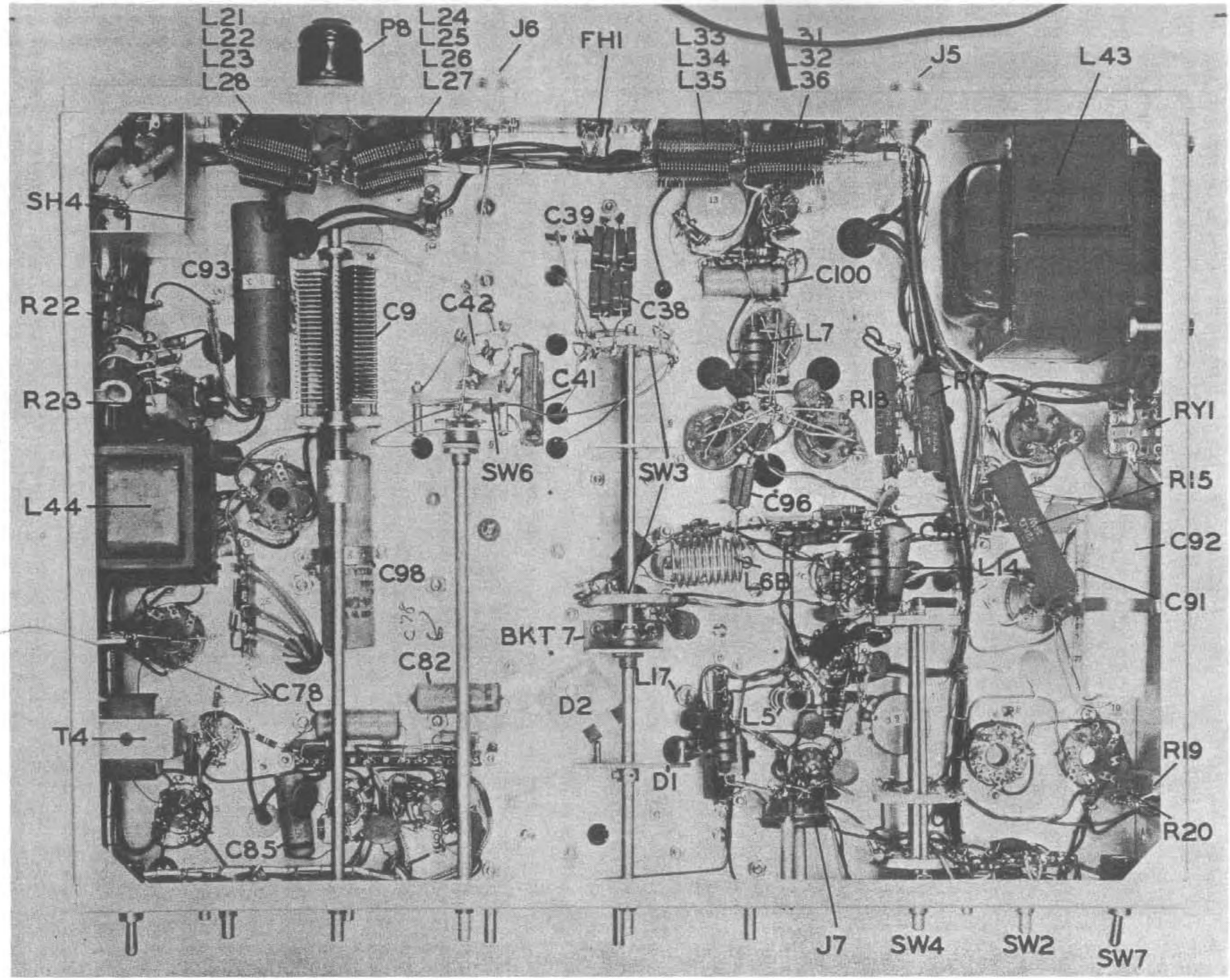
L21
L22
L23
L28
P8
L24
L25
L26
L27
J6
FH1
L33
L34
L35
L31
L32
L36
J5
L43
SH4
C39
C93
C100
R22
C9
C42
C38
L7
C41
R23
R18
R17
RY1
SW6
SW3
R15
L44
C96
C92
C98
L6B
L14
C91
BKT 7
C82
L17
C78
D2
L5
T4
R19
D1
R20
C85
J7
SW4
SW2
SW7

Figure AK

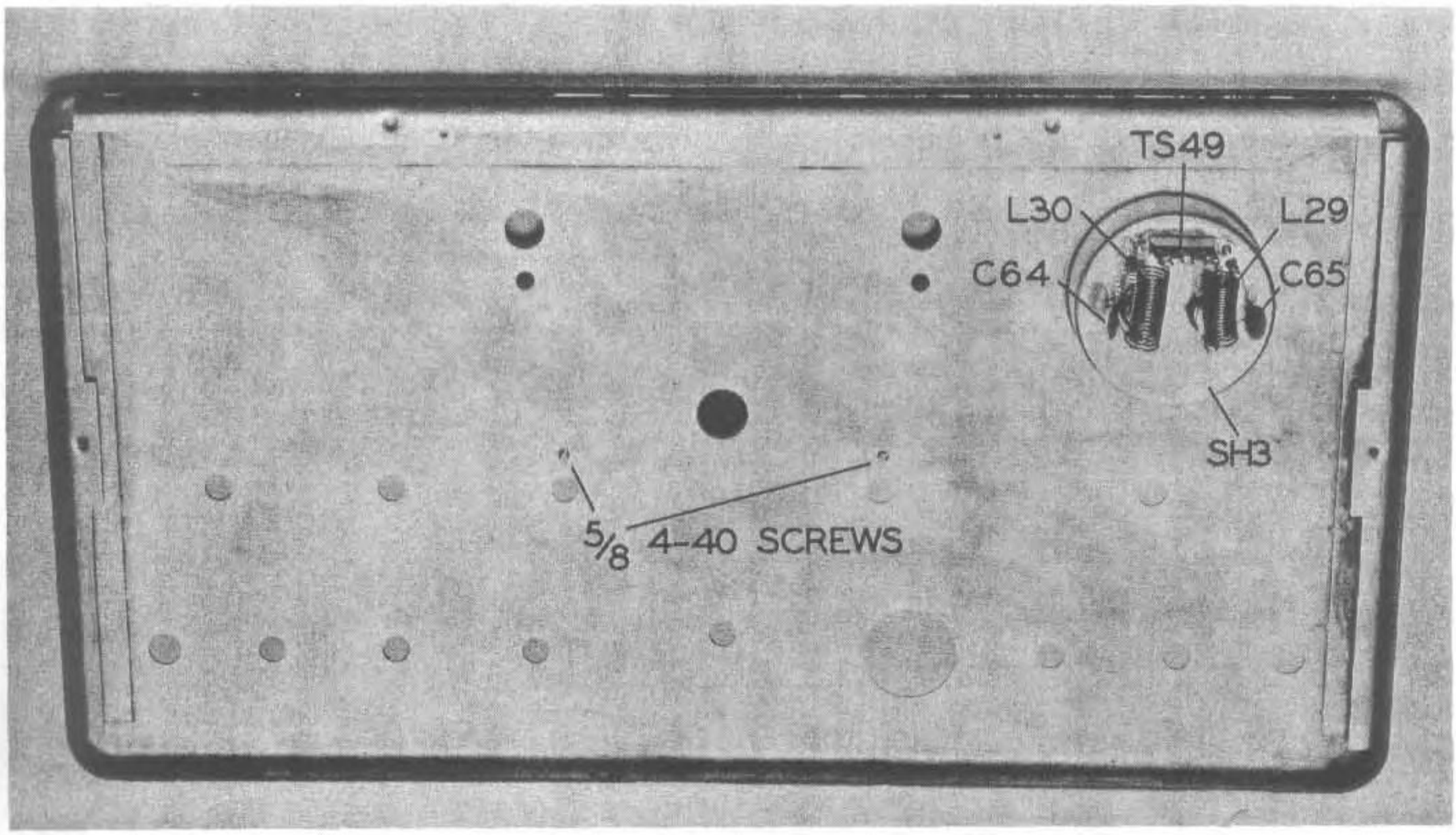

Figure AL

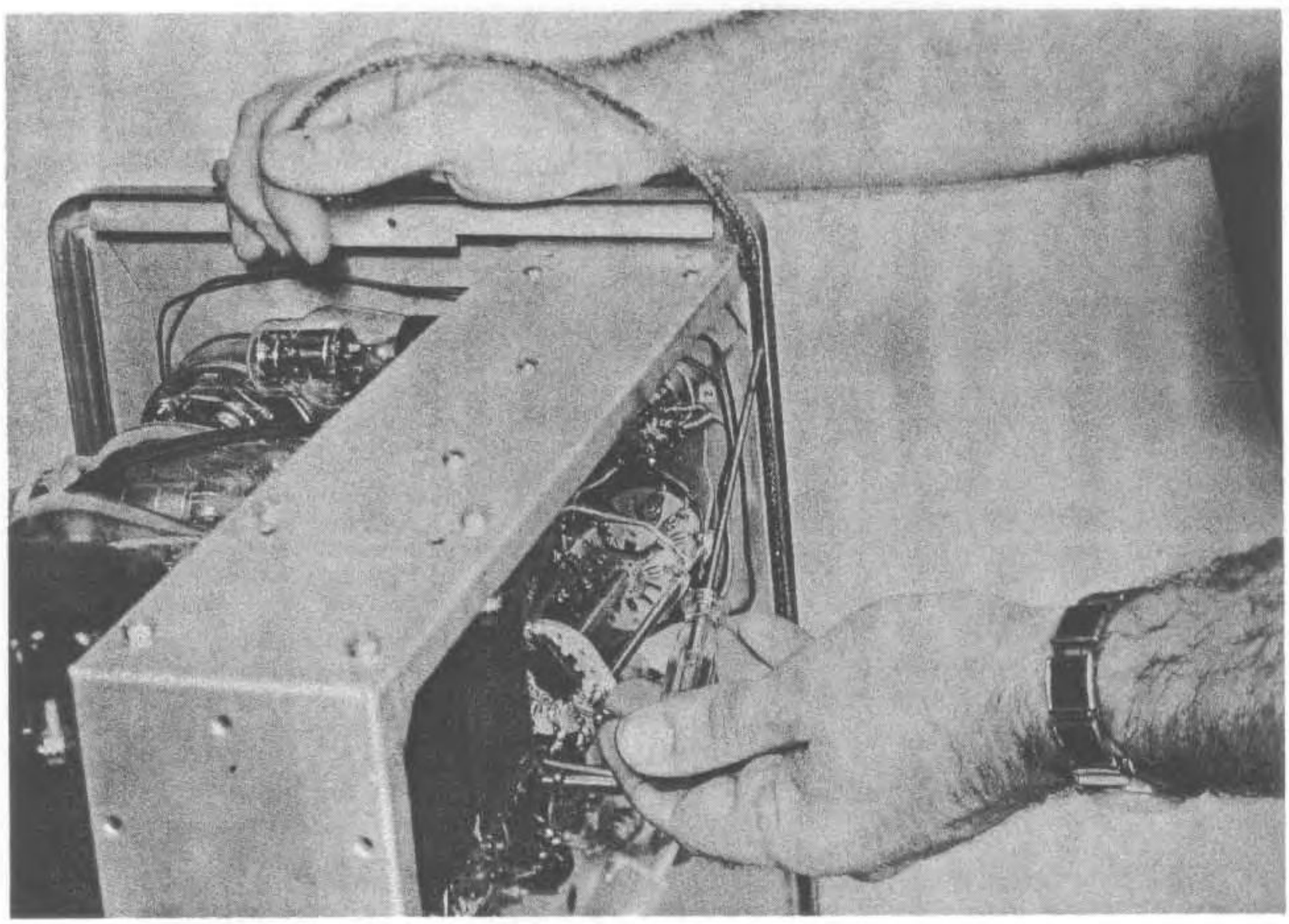

Figure AM

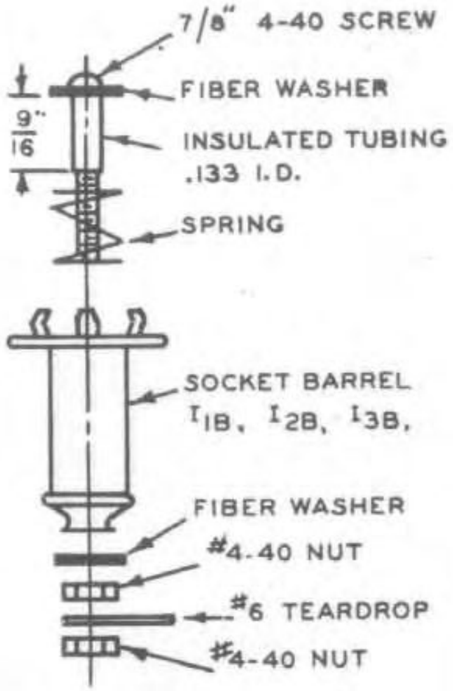

PILOT LIGHT SOCKET ASSEMBLY

Figure AO

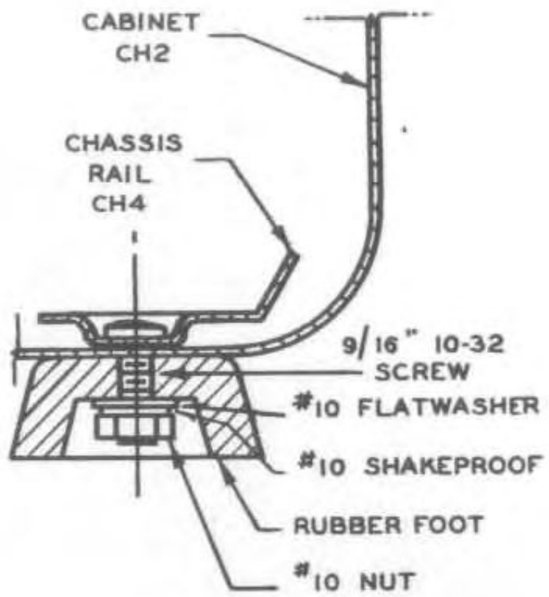

CABINET, RAIL, AND FOOT ASSEMBLY

Figure AQ

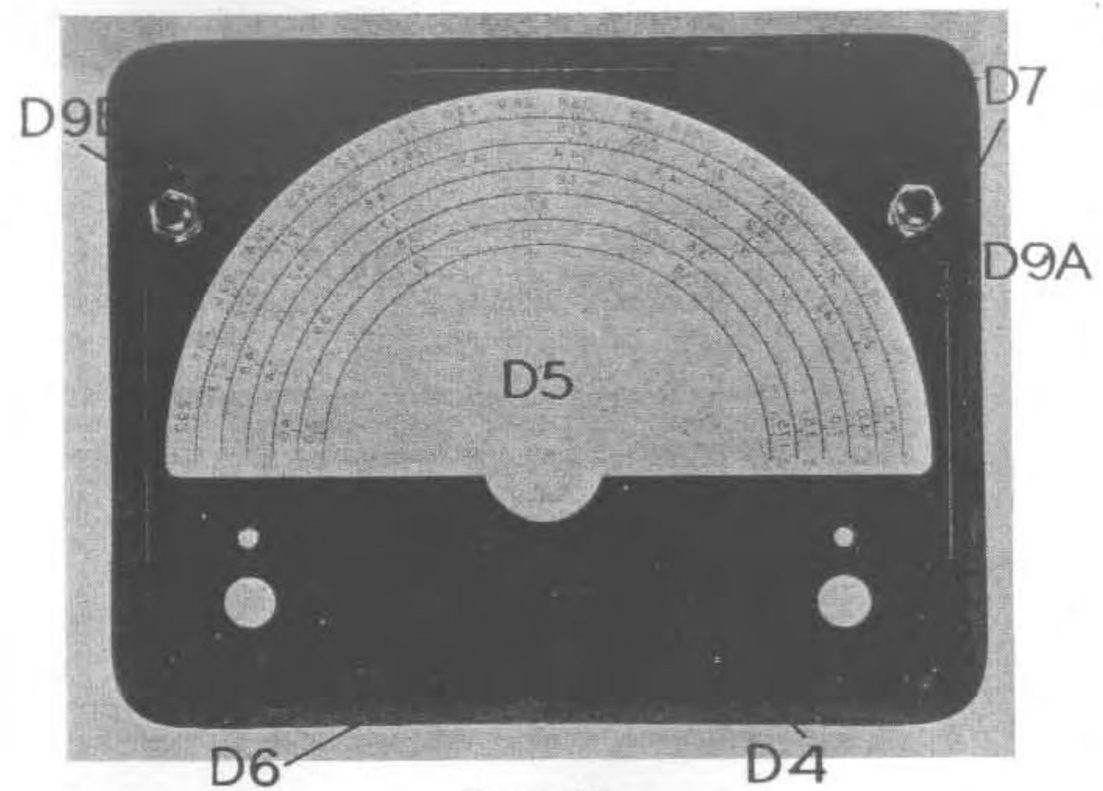

Figure AP

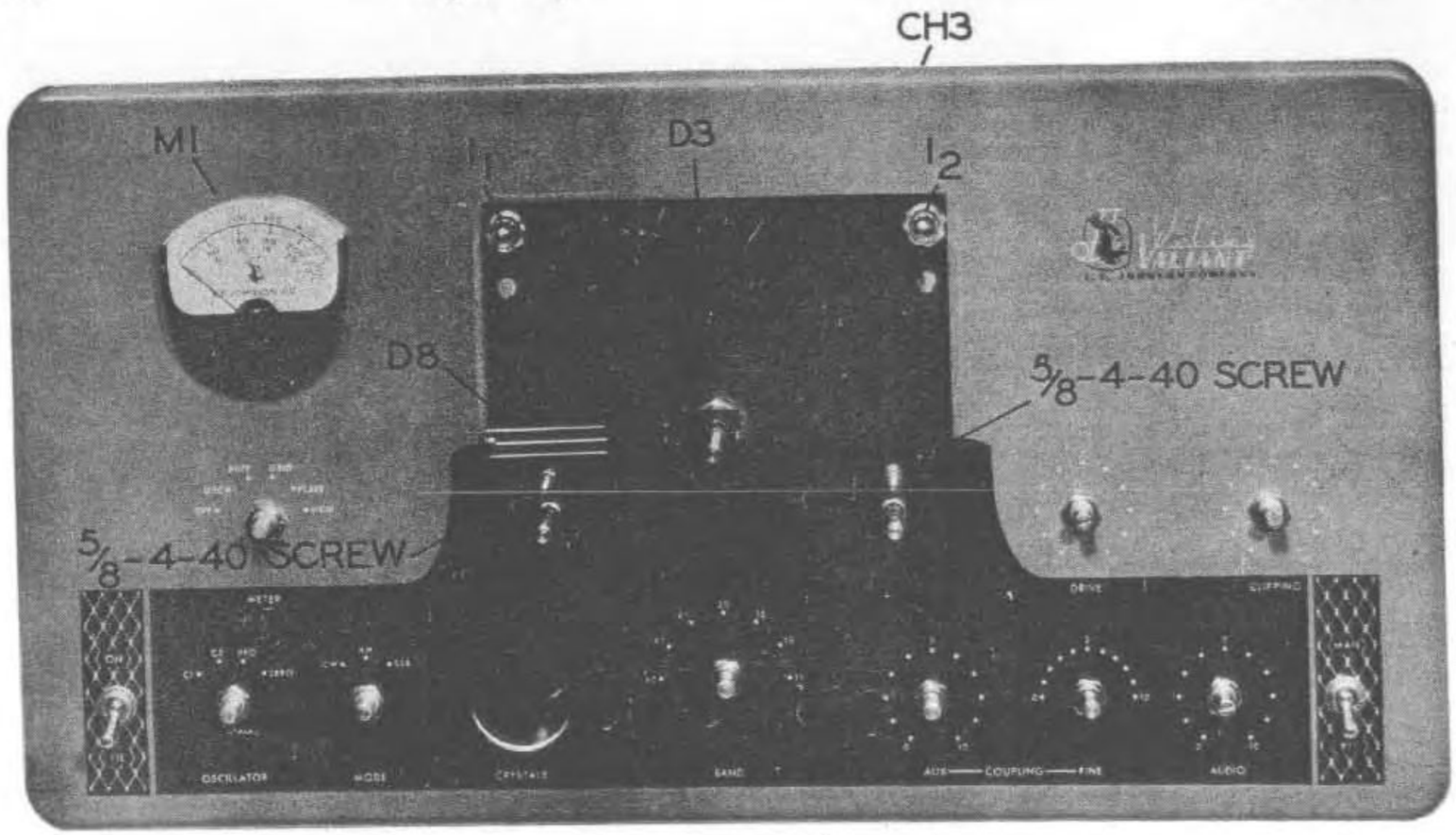

Figure AN

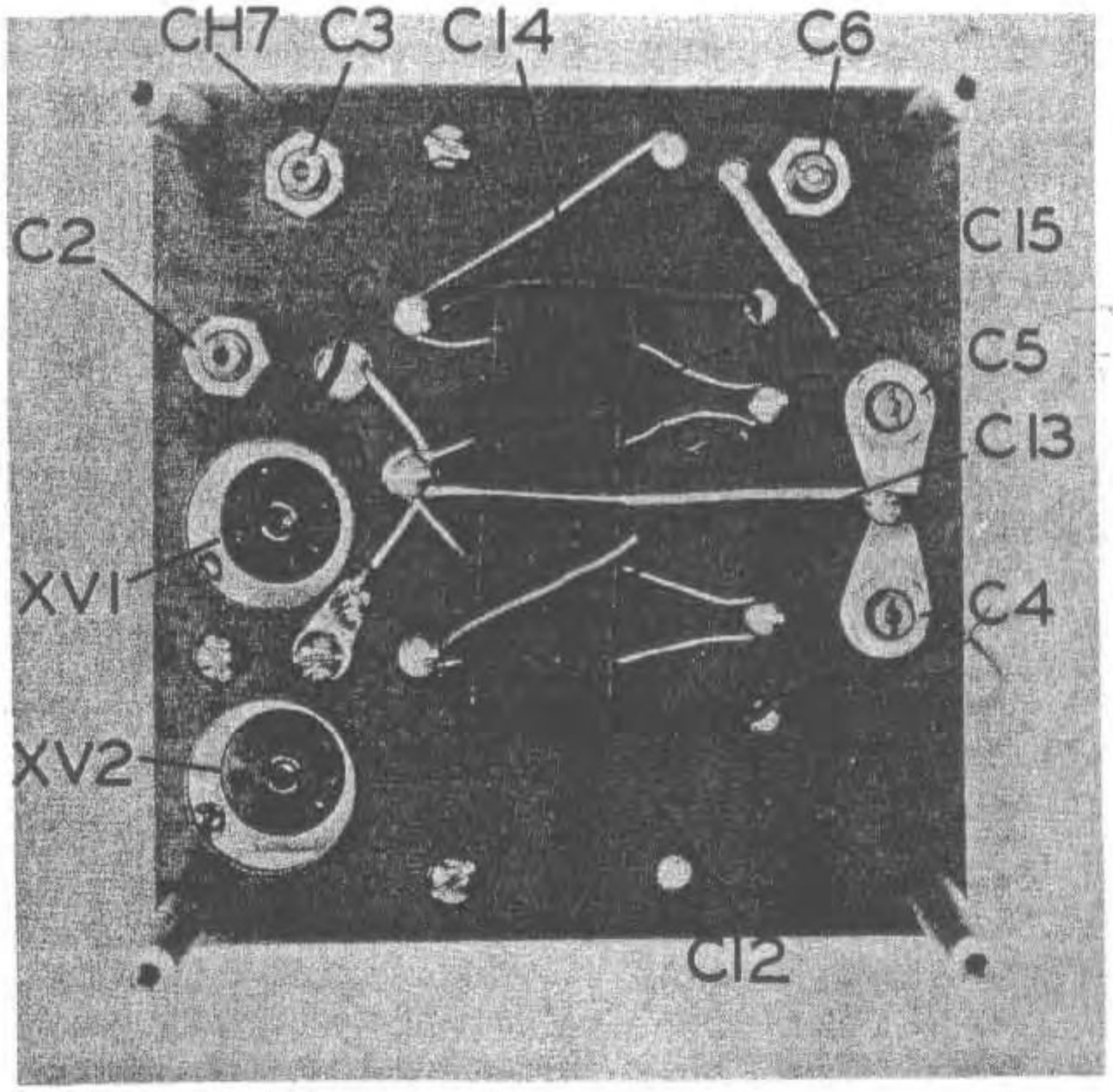

Figure AR

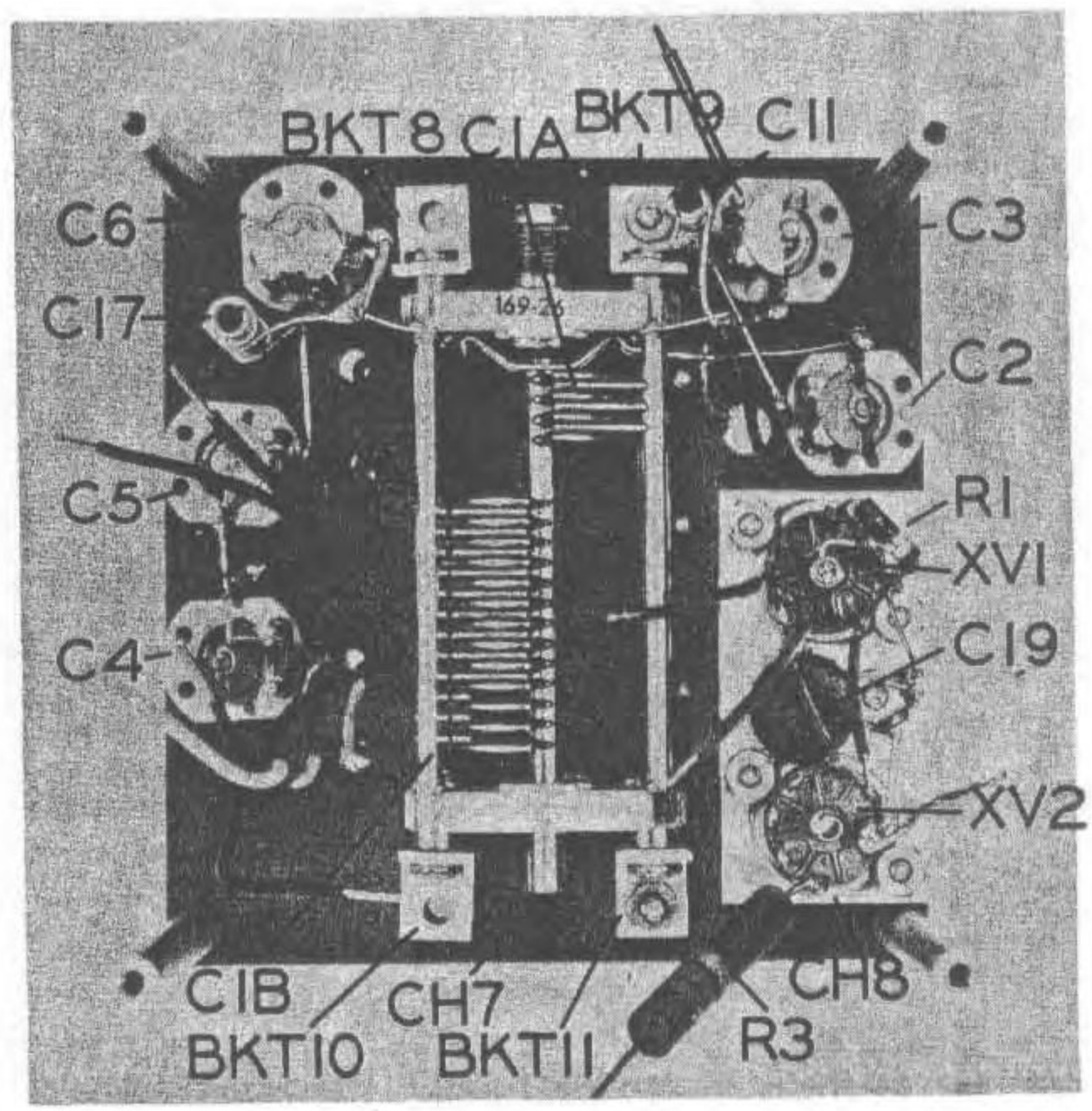

Figure AS

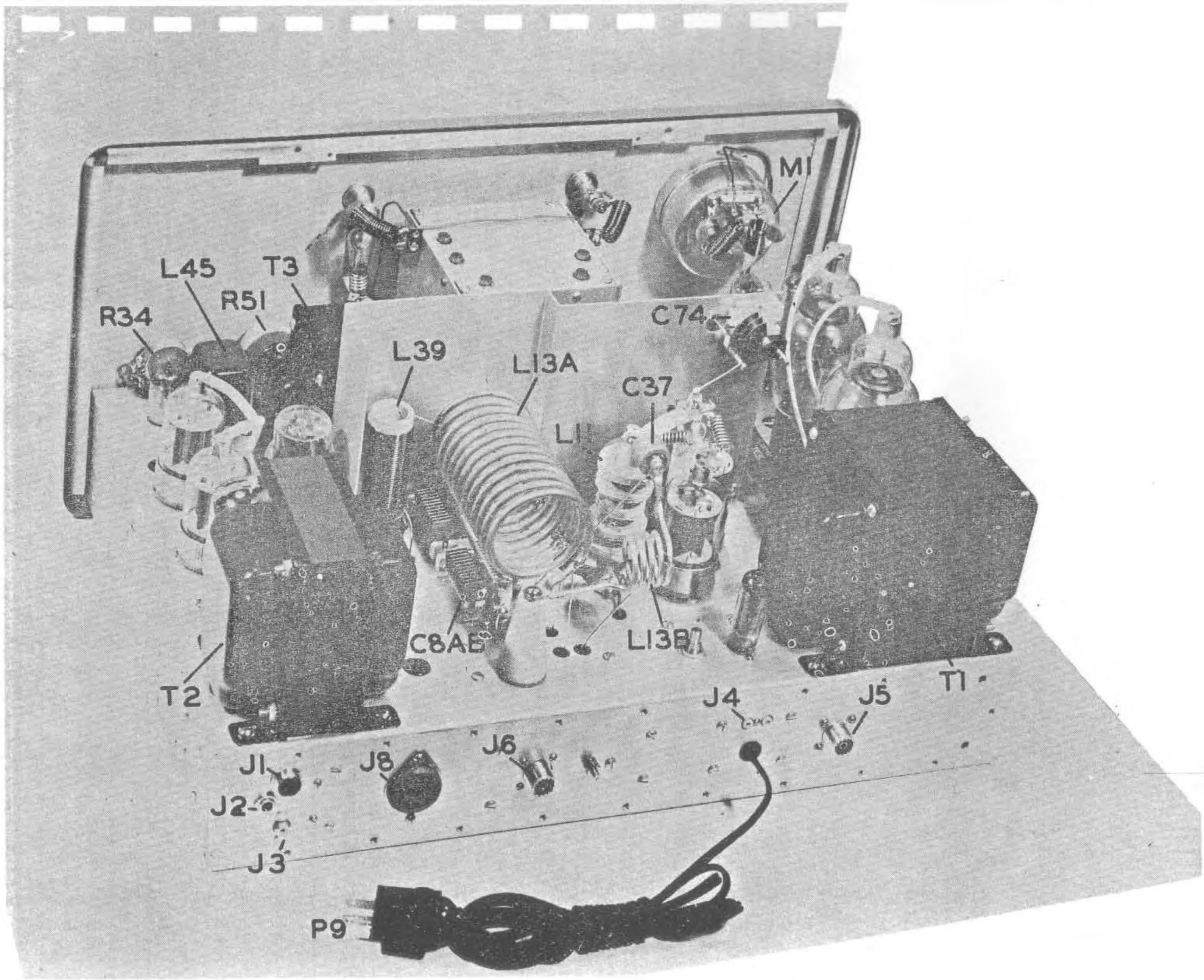
M1
L45
T3
R51
R34
C74
L39
L13A
C37
L1
C8AB
L13B
T2
T1
J4
J5
J6
J1
J8
J2
J3
P9

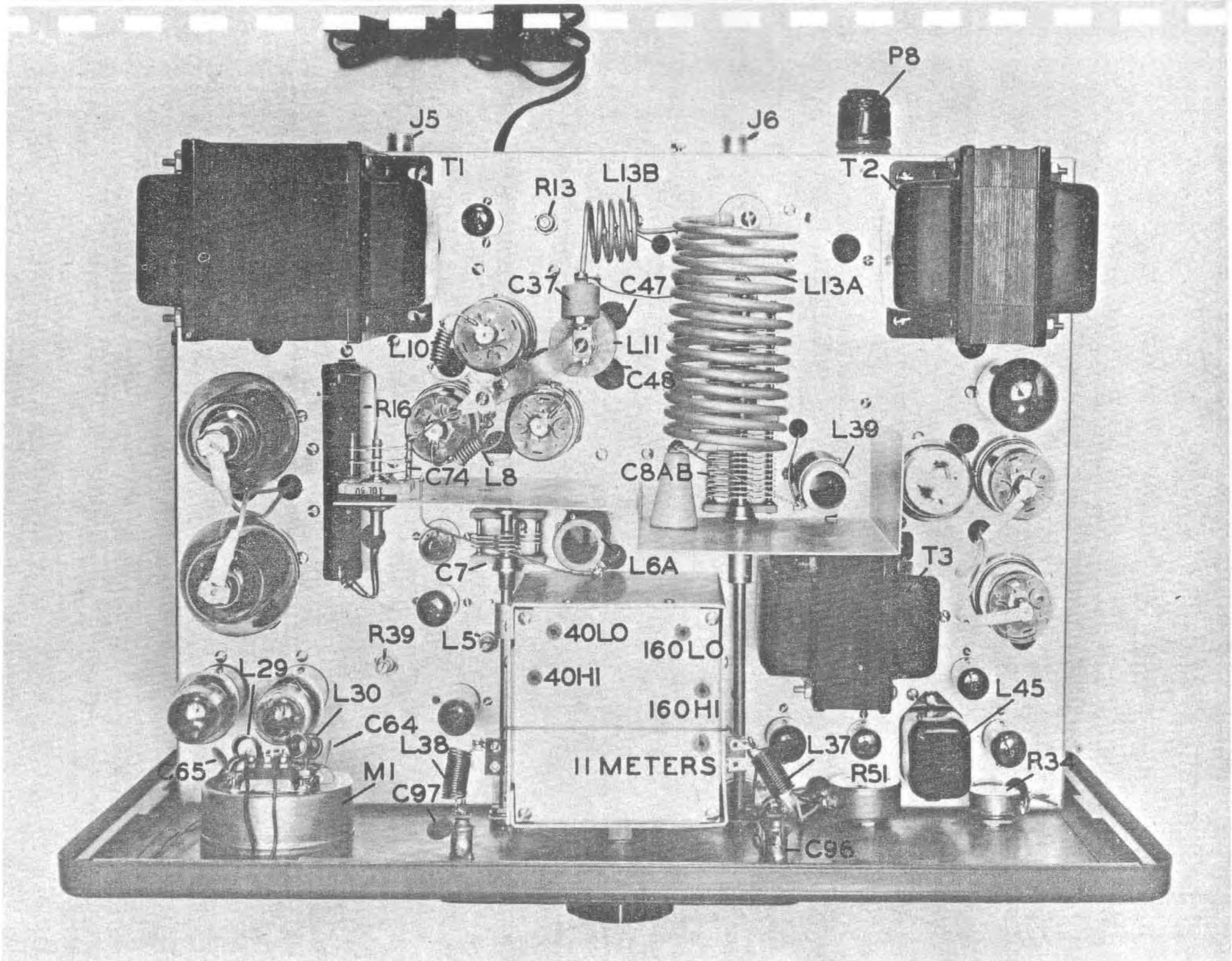
P8
J5
J6
T1
T2
R13
L13B
L13A
C37
C47
L10
L11
C48
R16
L39
C74
L8
C8AB
C7
L6A
T3
R39
L5
40LO
160LO
40HI
160HI
11 METERS
L29
L30
C64
L45
L38
L37
R51
R34
C65
M1
C97
C96

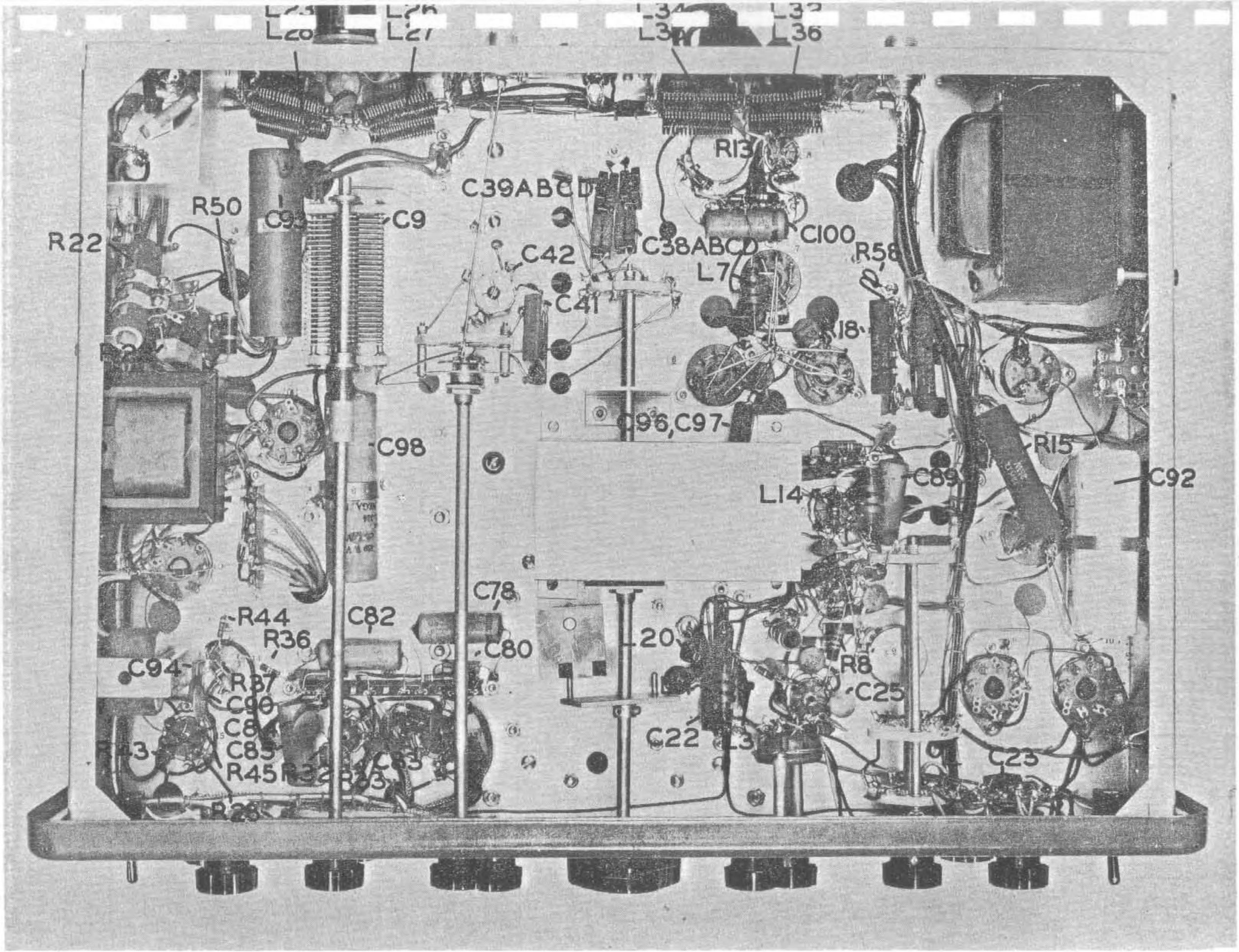
L20
L27
L34
L36
R13
C39ABCD
R50
C9
R22
C42
C38ABCD
C100
R58
L7
C41
18
C96,C97
C98
R15
C89
C92
L14
C78
R44
C82
R36
C80
20
C94
R37
R8
C25
C90
C84
C85
C22
C23
R45
R28

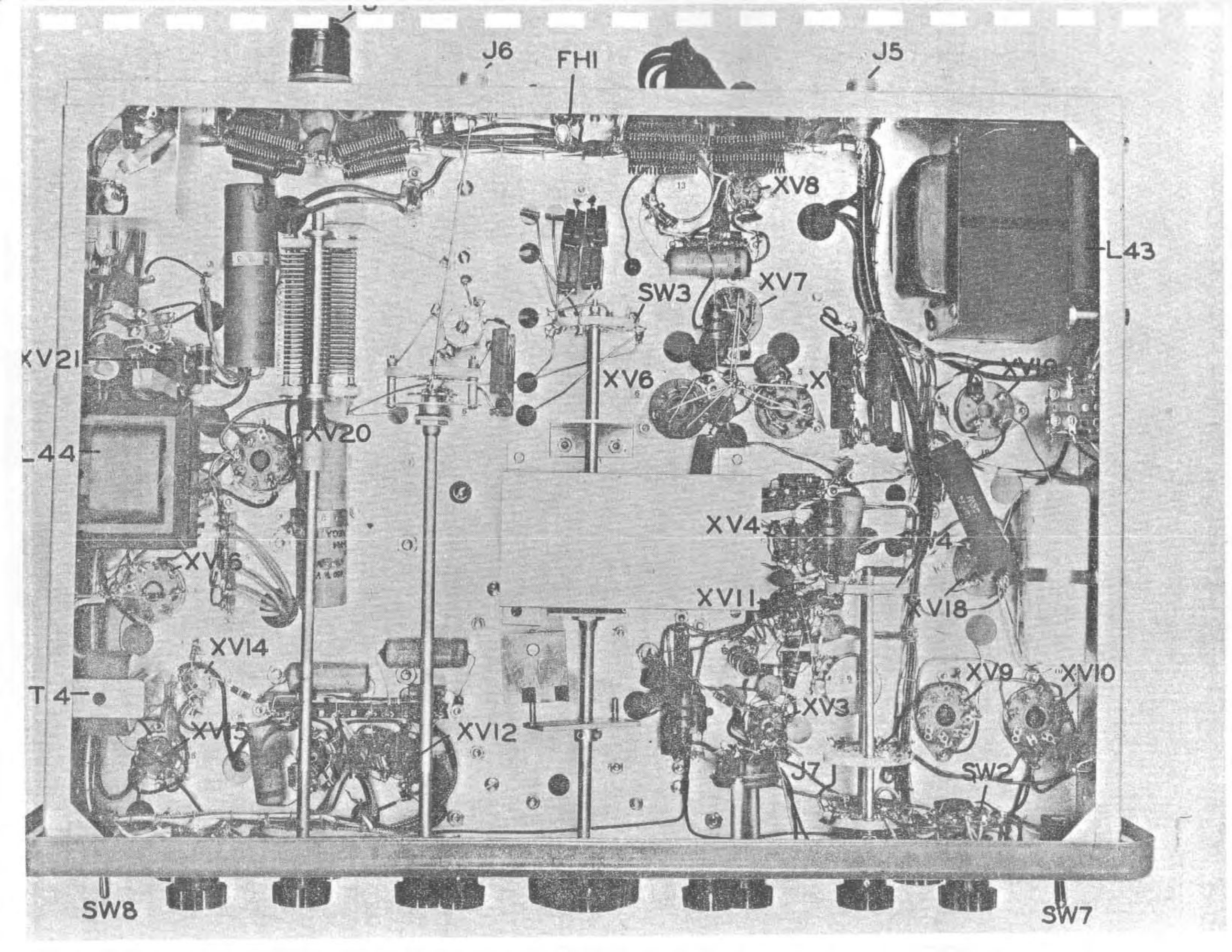
J6
FH1
J5
XV8
L43
SW3
XV7
XV21
XV6
XV20
L44
XV4
XV16
XV11
XV18
XV14
XV9
XV10
T4
XV3
XV15
XV12
J7
SW2
SW8
SW7

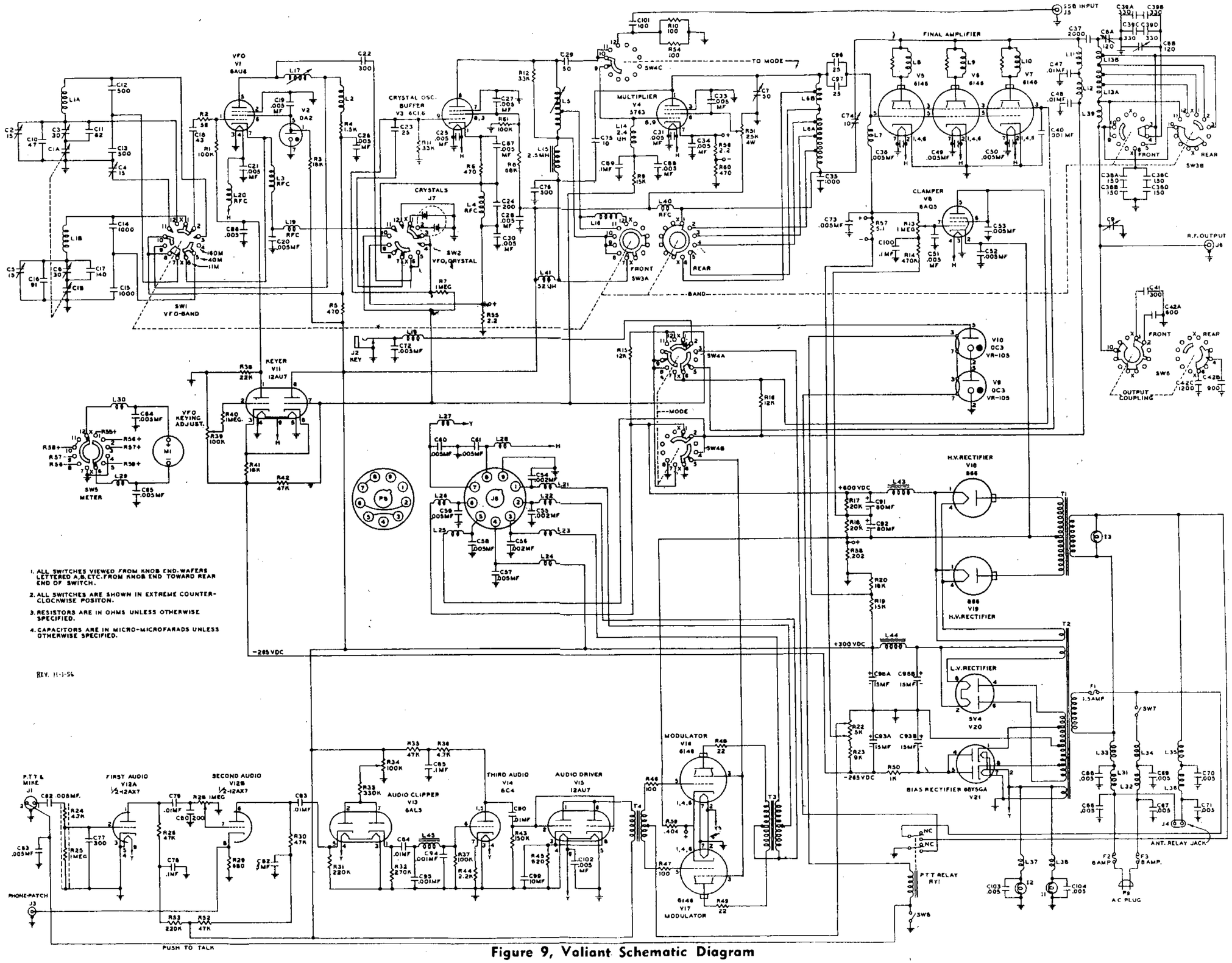

1. ALL SWITCHES VIEWED FROM KNOB END-WAFERS LETTERED A,B,ETC. FROM KNOB END TOWARD REAR END OF SWITCH.
2. ALL SWITCHES ARE SHOWN IN EXTREME COUNTER-CLOCKWISE POSITON.
3. RESISTORS ARE IN OHMS UNLESS OTHERWISE SPECIFIED.
4. CAPACITORS ARE IN MICRO-MICROFARADS UNLESS OTHERWISE SPECIFIED.

REV. 11-1-56

Figure 9, Valiant Schematic Diagram