MARK 4 CR REPEATER
AND
MARK 4 C CONTROLLER
OPERATING MANUAL

ADVANCED COMMUNICATIONS SYSTEMS

KENDECOM INC.
MICRO CONTROL SPECIALTIES

23 Elm Park, Groveland, Mass. 01834
(508) 372-3442 Fax (508) 373-7304

MARK 4 CR REPEATER
AND
MARK 4 C CONTROLLER
OPERATING MANUAL

VERSION 3.6
REVISED AUGUST 1996

MICRO CONTROL SPECIALTIES
23 ELM PARK
GROVELAND, MA 01834
VOICE (978) 372-3442
FAX (978) 373-7304

TABLE OF CONTENTS

1. INTRODUCTION AND NOTICES 8

1.1. INTRODUCTION 8
1.1.1. READING THE MANUAL 8
1.2. NOTICES 9

2. REPEATER FEATURES 11

2.1. GENERAL COMMENTS 11
2.2. DTMF 11
2.3. ACCESS CODE TYPES AND SOURCES 11
2.4. MODES OF ACCESS 12
2.5. TRANSMISSION AND USER FUNCTION TIMING 12
2.6. STATION IDENTIFICATION 13
2.7. TAIL AND COURTESY TONE (MESSAGE) 13
2.8. TELEPHONE INTERCONNECT 13
2.9. OTHER USER FUNCTIONS 14
2.10. MESSAGES 15
2.11. OTHER SPECIAL FEATURES 16

3. COMMANDS 17

3.1. GENERAL COMMENTS 17
3.2. FIXED MESSAGES 17
3.3. FACTORY SET OPERATING CONDITIONS (PARAMETERS) 19
3.4. PROGRAM MODE 20
3.4.1. PASSCODE COMMAND (P) (TOGGLE) 20
3.4.2. CHANGING THE PASSCODE COMMAND 20
3.5. MESSAGE PROGRAMMING 21
3.5.1. DESIGNING THE MESSAGE 21
3.5.2. SPECIAL CHARACTERS 22
3.5.3. PROGRAMMING THE MESSAGE 23
3.5.4. COMBINING MESSAGE TYPES 23
3.5.5. DELETING A MESSAGE 23
3.5.6. SPECIAL CHARACTER MESSAGES (MULTIFAX) 24
3.6. OTHER PROGRAMMING EXAMPLES 24
3.6.1. INFORMATIONAL MESSAGE 24
3.6.2. COURTESY TONE 24
3.6.3. ANALOG/DIGITAL CONVERTER (MF) 25
3.6.4. OUTPUT PULSE INCLUDED IN MESSAGE 25
3.6.5. DTMF OUTPUTS 25

3.7. MESSAGE CHARACTER TABLES **27**
3.7.1. TABLE 3.1 CW CHARACTER LIST 27
3.7.2. MULTIFAX WORD LIST 28
3.7.3. SPECIAL CHARACTERS 32
3.8. BASIC REPEATER OPERATION **34**
3.8.1. SYSTEM ENABLE/DISABLE (TOGGLE) 34
3.8.2. NOISE SUPPRESSION (TOGGLE) 34
3.8.3. CLEAR CONTROL MESSAGE 34
3.8.4. VOX OPERATION (TOGGLE) 34
3.8.5. FORCE PROCESSOR RESET (MESSAGE MASTER) 35
3.8.6. REPEAT PERMISSIONS (MODES OF ACCESS) 35
3.8.7. SET CW MESSAGE SPEED 35
3.8.8. SELECT CALLSIGN IDENTIFICATION MESSAGE 35
3.8.9. PROGRAM IDENTIFICATION MESSAGE 36
3.8.10. TAIL DESCRIPTIONS 36
3.8.11. PROGRAM TAIL MESSAGES 36
3.8.12. PROGRAM COURTESY TONE 37
3.8.13. TRANSMISSION TIME-OUT LIMIT 37
3.8.14. PROGRAM TRANSMISSION TIME-OUT MESSAGE 37
3.8.15. INVALID ACCESS LIMIT 37
3.8.16. COMMAND ACCESS FROM REPEATER RECEIVER 38
3.9. TELEPHONE INTERCONNECT COMMANDS **38**
3.9.1. PHONE MUTING PERMISSION (TOGGLE) 38
3.9.2. REPEATER MONITORING 38
3.9.3. DIALING TYPE 38
3.10. AUTOPATCH **39**
3.10.1. AUTOPATCH OPERATION 39
3.10.2. SELECT AUTOPATCH/REDIAL TIME-OUT LIMIT 39
3.10.3. AUTOPATCH DIALING RESTRICTIONS 39
3.10.4. PROGRAMMING PROHIBITED TELEPHONE NUMBERS 40
3.10.5. PROGRAMMING PREDIAL AUTOPATCH DIGITS 40
3.11. AUTODIAL **41**
3.11.1. AUTODIAL OPERATION 41
3.11.2. EXTENDED (USER) AUTODIAL OPERATION 41
3.11.3. SELECT AUTODIAL/EXTENDED AUTODIAL TIME-OUT LIMIT 41
3.11.4. PROGRAMMING AUTODIAL/EXTENDED AUTODIAL TELEPHONE NUMBERS 41
3.11.5. VOICE PAGING 43
3.11.6. PAUSE DURING AUTODIALING 44
3.12. REVERSE AUTOPATCH **44**
3.12.1. REVERSE AUTOPATCH OPERATION 44
3.12.2. PHONE RING TIME 45
3.12.3. REVERSE AUTOPATCH ANSWERING 45
3.12.4. COMMAND LINE INTERCONNECT 46
3.13. USER FUNCTION COMMANDS **46**
3.13.1. USER FUNCTION OPERATION 46
3.13.2. USER FUNCTION TIME-OUT LIMIT 46
3.13.3. PROGRAM USER FUNCTION MESSAGES 47
3.13.4. PROGRAM INFORMATION BULLETIN MESSAGE 47
3.13.5. PROGRAM LINK MESSAGES 47
3.13.6. PROGRAM ANALOG/DIGITAL CONVERTER MESSAGES (MULTIFAX) 48

3.13.7. USER MAILBOXES (MESSAGE MASTER) 48
3.13.8. AUTO-ERASE 48
3.13.9. SET USER MESSAGE MAXIMUM RECORD TIME 49
3.13.10. ERASE MESSAGES 49
3.14. PERIODIC ANNOUNCEMENT COMMANDS (MULTIFAX) 49
3.14.1. PERIODIC ANNOUNCEMENT MESSAGE INTERVAL 49
3.14.2. PROGRAM PERIODIC ANNOUNCEMENT 50
3.15. COMMAND OUTPUTS 50
3.15.1. SETTING COMMAND OUTPUTS (TOGGLE) 50
3.15.2. PROGRAM COMMAND FUNCTION 7 MESSAGE 50
3.16. CLOCK COMMANDS (MULTIFAX) 51
3.16.1. SET REAL-TIME CLOCK 51
3.16.2. MESSAGE MASTER VOICE TRACK COMMANDS 51
3.16.3. ERASE MESSAGES 51
3.16.4. PARAMETER SET COMMANDS 52
3.17. CHANGING ACCESS CODES 54
3.18. COMMAND ACCESS CODE SUMMARY 56

4. USER FUNCTIONS AND ACCESS CODES 63

4.1. GENERAL COMMENTS 63
4.2. FIXED MESSAGES 63
4.3. TELEPHONE INTERCONNECT 64
4.3.1. AUTOPATCH CLEAR 64
4.3.2. # PHONE MUTING 64
4.3.3. AUTOPATCH ACTIVATE (PRIMARY AUTOPATCH) 64
4.3.4. SECONDARY PRE-DIAL AUTOPATCH ACTIVATE 64
4.3.5. TERTIARY PRE-DIAL AUTOPATCH ACTIVATE 64
4.3.6. REDIAL 65
4.3.7. AUTODIAL/EXTENDED AUTODIAL PROCEDURE 65
4.3.8. REVERSE AUTOPATCH 65
4.3.9. REVERSE AUTOPATCH ALERT 65
4.4. OTHER USER FUNCTIONS 66
4.4.1. USER FUNCTION CLEAR 66
4.4.2. * UNMUTE/BUFFER CLEAR 66
4.4.3. ** IGNORE ACCESS 66
4.4.4. TIMER RESET OR WAKEUP 66
4.4.5. SLEEP 66
4.4.6. PLAY INFORMATION (BULLETIN) MESSAGE 66
4.4.7. CLOCK TIME ANNOUNCEMENT (MF) 67
4.4.8. ANALOG TO DIGITAL CONVERTER READOUTS (MF) 67
4.4.9. PULSE OUTPUTS 67
4.4.10. SERIAL OUTPUT 68
4.4.11. ECHO FUNCTION (MM) 68
4.4.12. READOUT OF RECEIVED SIGNAL DEVIATION, SIGNAL STRENGTH, AND FREQUENCY OFFSET (MF) 68
4.4.13. USER FUNCTION OUTPUTS 69
4.4.14. LINK FUNCTIONS 69
4.4.15. TONE PAD TESTS 70

4.4.16. BCD CONTROL OUTPUT 70
4.4.17. BCD SERIAL OUTPUT FUNCTION 71
4.4.18. USER MAILBOXES (MM) 73
4.4.19. VOICE MESSAGE LISTS 73
4.5. SEQUENTIAL TONES 75
4.6. USER FUNCTION ACCESS CODE SUMMARY 77

5. FRONT PANEL 79

5.1. FRONT PANEL 79
5.1.1. MARK 4 REPEATER FRONT PANEL 79
5.1.2. MARK 4C CONTROLLER FRONT PANEL 80
5.2. REAR PANEL 81
5.2.1. TERMINAL DESIGNATIONS 81
5.2.2. AUDIO JACKS 82
5.2.3. JA1 (RX2) 82
5.2.4. JA2 (CMD IN) 82
5.2.5. JA3 (LINK IN) 82
5.2.6. JA4 (LINK OUT) 82
5.2.7. JA5 82
5.2.8. JA6 83
5.2.9. JA7 83
5.2.10. JA8 83
5.2.11. TERMINAL DESCRIPTIONS 83
5.2.12. TB2-TB6 (AD1-AD5) 84
5.2.13. TB7 (PULS) 84
5.2.14. TB8 (EXTID) 84
5.2.15. TB9 - TB5 (CF1-CF7) 84
5.2.16. TB17 (AB) 84
5.2.17. TB18 (BZ) 84
5.2.18. TB19 - TB30 (UF1-UF12) 85
5.2.19. TB32 - TB39 85
5.2.20. TB40 (COS) 85
5.2.21. TB41 (SEQT) 85
5.2.22. TB42 (COSL) 85
5.2.23. TB43 (XHLD) 86
5.2.24. TB44 (CMD) 86
5.2.25. TB45 (VOX) 86
5.2.26. TB48 (RECEIVED SIGNAL STRENGTH) 86
5.2.27. TB49 (RECEIVER DISCRIMINATOR) 87
5.2.28. TB50 (RECEIVED SIGNAL DEVIATION) 87
5.2.29. TB51 (K3 RELAY) 87
5.2.30. TB52 (K2 RELAY) 87
5.2.31. TB53 (K1 RELAY) 87
5.2.32. TB54 (PTT) 88
5.2.33. TB57 - TB58 (PHONE LINE) 88
5.2.34. TB59 - TB60 (COMMAND PHONE) 88
5.3. INITIAL INSTALLATION 89
5.3.1. GENERAL COMMENTS 89

5.3.2. MARK 4 REPEATER INSTALLATION PROCEDURE 89
5.3.3. MARK 4C CONTROLLER INSTALLATION PROCEDURE 91
5.4. TELEPHONE INTERCONNECT INSTALLATION 92
5.4.1. INTERCONNECT REGISTRATION 92
5.4.2. NON-REGISTERED AUTOPATCH INTERFACE INSTALLATION 93
5.4.3. REGISTERED AUTOPATCH TELEPHONE INTERFACE INSTALLATION 94
5.4.4. OPTIONAL NON-REGISTERED COMMAND TELEPHONE INTERFACE INSTALLATION 94
5.4.5. OPTIONAL REGISTERED COMMAND TELEPHONE INTERFACE INSTALLATION 94
5.5. POWER SOURCE OPERATION INSTALLATION 95
5.6. COMMAND RECEIVER INSTALLATION 97
5.7. MULTIFAX TO RECEIVER INTERFACING 97
5.7.1. TABLE 5.1 98
5.7.2. RECEIVER READOUT FUNCTION VOLTAGE LEVELS 98
5.8. OTHER MULTIFAX DIGITAL TO ANALOG READOUT CONNECTIONS 98
5.9. OTHER CONNECTIONS 100
5.9.1. TELEPHONE LINE SHARING 100
5.9.2. MULTIFAX AND MESSAGE MASTER BATTERY BACKUP 100
5.9.3. USER FUNCTION AND COMMAND OUTPUT CONNECTIONS 100
5.10. LINKING ARRANGEMENTS 100
5.10.1. CONNECTIONS 101
5.10.2. LINK OPERATION 102
5.10.3. SECOND LINK FUNCTION 103

6. CIRCUIT BOARDS 104

6.1. CIRCUIT DESCRIPTION 104
6.2. ADJUSTMENT - GENERAL 107
6.3. ADJUSTMENT - PROCEDURE 107
6.4. PROCESSOR CIRCUIT BOARD 109
6.5. EEPROM FAULT RECOVERY 110
6.6. BACKPLANE CIRCUIT BOARD 111
6.7. MESSAGE MASTER CIRCUIT DESCRIPTION 112

7. MR4 RECEIVER 114

7.1. CIRCUIT DESCRIPTION 114
7.2. INSTALLATION 116
7.3. ALIGNMENT 117
7.4. MR4 RECEIVER PARTS LIST - 1 REV A 119

8. MARK 4 VERSATILE COMPUTER INTERFACE 122

8.1. APPLICATION 122
8.2. VCI CONTROL PROGRAMS 123
8.2.1. VCI.EXE 123
8.2.2. SETUP.EXE 124
8.2.3. OPERATION WITHOUT THE VCI CONTROL PROGRAM 124

8.2.4. NEW COMMANDS 124
8.2.5. VCI DATA RATE COMMANDS 125
8.2.6. CHANGES TO MARK 4 COMMANDS 126
8.2.7. DATA INTERFACE 126
8.2.8. CHANGING DATA RATES 127
8.2.9. VCI CONTROL PROGRAM OPERATION 127

LIMITED WARRANTY

KENDECOM, Incorporated warrants to the original purchaser that this product shall be free of defects in material and workmanship for a period of one year from the original date of purchase.

During the warranty period, Kendecom, Incorporated will provide any parts necessary to correct said defects provided the unit is delivered by the original owner intact to us for our examination with all transportation charges prepaid and, provided that our examination discloses that the unit is defective.

This warranty does not apply to any unit which has been subjected to misuse, neglect, accident, improper installation, incorrect maintenance, or use in violation of instructions furnished by us, nor to any unit where the serial number has been removed, defaced, or changed, nor to any unit which has been modified or used with accessories not recommended by us.

The foregoing constitutes Kendecom, Incorporated's entire obligation with respect to this product and no employee or officer of Kendecom, Incorporated or its dealers or distributors shall have authority to extend this warranty. The buyer agrees that no other remedy for incidental or consequential damages, injury to person or property, or any other loss shall be available to him/ her. Some states do not allow limitations on how long an implied warranty lasts or on consequential damages so the above limitations may not apply to you.

The installation, operation, and maintenance of this unit may require licensing by the Federal Communications Commission, or other regulatory agencies, and may require that adjustments, to insure the proper operation of this unit, be made by a licensed electronic technician. The proper and legal operation of this unit is the responsibility of the owner and not of Kendecom, Incorporated.

Kendecom, Incorporated reserves the right to make changes and improvements to its products without obligation to install such changes in its previously sold products.

1. INTRODUCTION AND NOTICES

1.1. INTRODUCTION

Welcome to the next generation of repeaters! Mark 4 repeaters and controllers are designed and built to be the finest available in the field of radio communications. They inherited a legacy of features pioneered in the Mark 3, the world's first commercially available microprocessor based repeater, and to that legacy they have a added a host of exciting new features. The Mark 4 is unique. No other repeater offers all the features and options of the Mark 4, and no other repeater makes functions 'come alive' like the Mark 4. As the owner of a Mark 4 repeater or a Mark 4C Controller, you now have the extraordinary flexibility at your command to serve you reliably for years to come.

The information contained in this manual describes both Mark 4 repeaters, Mark 4C Controllers, and two major options, Multifax and Message Master. Mark 4 repeaters are completely self-contained units with microprocessor-based controller, audio circuitry, telephone interface, receiver, and transmitter contained in a single rack mount cabinet. The Mark 4 is the quickest route to the new repeater generation. Mark 4C controllers are also self-contained units that include all Mark 4 repeater features and components except the transmitter and receiver. The Mark 4C is designed for easy interfacing to bring next generation features to existing repeaters. The difference between the two units will be discussed where appropriate.

1.1.1. READING THE MANUAL

It is highly recommended that the Manual be read carefully from the beginning before any installation is undertaken.

As you read through the Manual in the manner that it is presented, you can design a Customized Repeater Plan. At the conclusion of your reading, you will then know what features you want to have as part of your CRP, how they then will operate, and what will be needed to make them function properly. Then, with your design in hand, you can return to the section on installation and put your CRP into operation. Of course, the CRP is not cast in stone and may be changed or modified at any time. The following is a description of the content of each Section:

II REPEATER FEATURES - This section contains information of a general nature on the features of the Mark 4. With the information given here, your customized repeater plan can be started.

III COMMAND OPERATIONS & CODES - This section contains detailed information on the various characteristics of the features and their procedure for use.

IV USER FUNCTIONS & CODES - This section contains all repeater features that are accessible to the general user and their procedure for use.

V INSTALLATION - This section contains all information necessary for general installation and other connections.

VI CIRCUIT & CIRCUIT BOARD DESCRIPTION - This section contains information on the operating characteristics of the various circuits and any adjustments that might be necessary.

APPENDIX A - SCHEMATICS - This section contains all circuit drawings, layouts, and parts lists.

APPENDIX B - TRANSMITTER - The information contained in this section is required by the FCC to be provided to the purchaser. Since the transmitter has been properly assembled, adjusted, and aligned at the factory, this information will not be needed other than for reference.

APPENDIX C - RECEIVER - This Appendix will provide reference material on the Mark 4, MR4 receiver.

1.2. NOTICES

Mark 4 repeaters and Mark 4C controllers are intended for use in radio repeater service applications. The ownership, installation, and operation of radio transmitting and receiving equipment may be subject to government regulations and it is the responsibility of the equipment owner to comply with such regulations. Kendecom, Incorporated and Micro Control Specialties assume no responsibility or liability for the proper and legal ownership or operation of this equipment.

Mark 4 repeaters and Mark 4C controllers are intended to be installed and used by persons knowledgeable in the safe and proper operation of electronic equipment. The equipment owner is responsible for insuring that the installation and operation of this equipment is in accordance with applicable fire and safety regulations and recommended practices. Kendecom, Incorporated and Micro Control Specialties assume no responsibility for the proper installation or operation of this equipment, nor do they accept any liability for incidental, consequential, or other damages or injury to persons or property resulting from improper or unsafe use of this equipment or from the use of this equipment in any manner not explicitly described in this manual.

All digital electronic equipment is subject to Part 15 of the FCC Regulations and in accordance with those regulations we are required to provide the following statement:

> "This equipment generates and uses radio frequency energy and if not installed and used properly; that is, in strict accordance with the manufacturer's instructions, may cause interference to radio and television reception. It has been type-tested and found to comply with the limits for a Class B computing device in accordance with the specifications in Subpart J of Part 15 of FCC Rules, which are designed to provide reasonable protection against such interference in a residential installation. However, there is no guarantee that this equipment does cause interference to radio or television reception, which can be determined by turning the equipment off and on. If interference should occur,

the user is encouraged to try to correct the interference by one of the following measures: reorient the receiving antenna, relocate the equipment with respect to the receiver, plug the equipment into a different outlet so that equipment and receiver are on difference branch circuits. If necessary, the user should consult the manufacturer or an experienced technician for additional suggestions. The user may find the following booklet, prepared by the Federal Communications Commission, helpful: 'HOW TO IDENTIFY AND RESOLVE RADIO-TV INTERFERENCE PROBLEMS.' THIS BOOKLET IS AVAILABLE FROM THE US GOVERNMENT PRINTING OFFICE, WASHINGTON, DC 20402, STOCK NO. 004-000-00345-4."

Mark 4 repeaters and Mark 4C controllers may be equipped with telephone interconnect interfaces which are registered in accordance with FCC Regulations Part 68. These interfaces include a sealed module which contains no owner serviceable components or adjustments. In the event of failure, the interface should be disconnected from the telephone network and the module, or the circuit board containing the module, should be returned to Micro Control Specialties for repair or replacement.

2. REPEATER FEATURES

2.1. GENERAL COMMENTS

The following are general descriptions of the many features of the Mark 4 and the two major options, Multifax and Message Master. MULTIFAX option provides English language voice messages that are either fixed or can be programmed from a vocabulary library. MESSAGE MASTER option allows the recording, storage, and playback of real voice messages.

2.2. DTMF

DTMF means Dual Tone Multi-Frequency that is the generic term for tone signaling commonly used in telephone systems. (Touch-tone is an AT&T trademark for DTMF signaling.) The DTMF tone detector used in the Mark 4 will give accurate and virtually false-free tone recognition with high immunity to noise and interference. Tones are normally muted (not retransmitted) but may be unmuted for control of other equipment not associated with the Mark 4.

2.3. ACCESS CODE TYPES AND SOURCES

All functions and controllable operating characteristics of the Mark 4 may be accessed remotely by entering a sequence of three or more DTMF digits called an access code. Access codes are of two types: USER FUNCTION ACCESS CODES and COMMAND ACCESS CODES or COMMANDS. Command access codes are used by control operators to establish repeater operating characteristics. User function access codes are used to activate and release Mark 4 capabilities accessible to all repeater users (User Functions). Although Mark 4 repeaters are shipped from the factory with an initial set of access codes programmed into memory, ACCESS CODES MAY BE CHANGED at any time by use of the appropriate commands.

Access codes may be entered from any of six sources: LOCAL MICROPHONE, COMMAND RECEIVER, OPTIONAL COMMAND PHONE LINE, REPEATER RECEIVER, AUTOPATCH PHONE LINE, AND LINK. It is unlikely that access codes will be entered from more than one of these sources at a time but to guard against even this unlikely possibility, the Mark 4 allocates its DTMF decoder on a priority basis to insure that command access can always be obtained. Priority is normally assigned in the same order as the listing of sources above with the local microphone having the highest priority. When functions are active, there is some re-ordering of priority.

To prevent non-members of repeater groups from discovering access codes, the Mark 4 features an INVALID ACCESS LIMIT which sets the number of DTMF digits which are allowed to be entered before further access attempts are ignored.

2.4. MODES OF ACCESS

CARRIER ACCESS mode (open repeater) allows any received signal sufficient to open the repeater squelch to be considered a valid signal.

The CROSS ACCESS mode (Continuous Tone Coded Squelch System {CTCSS}) limits access to repeater members by requiring that continuous sub-audible tone of the required frequency be present on the user's signal. (Private Line or PL is a trademark for Motorola's version of CTCSS operation.) This mode requires that each repeater user's transmitter be equipped with a single frequency tone generator, or encoder, and that the repeater be equipped with a tone decoder. Space is provided on the Mark 4 for installation of a Communication Specialist TS-32 tone decoder.

WAKEUP ACCESS gives a form of private, or 'closed', style repeater operation without the need for each repeater user to install a CTCSS encoder in their transmitters. In this mode, the repeater will be in a "sleep" state until a user transmits the proper DTMF Wakeup Code (for normal communications) or any other function access code. The repeater will then operate as in the carrier access mode until the Sleep Code is transmitted or it will automatically return to the "sleep" state if no received signal is present for one (1) minute.

WAKEUP/CTCSS ACCESS mode allows both modes of access. Users who are not equipped with CTCSS may awaken the repeater as though it were in the Wakeup access mode. Those users who are equipped with CTCSS may use the repeater as though it was in the CTCSS access mode.

VOX OPERATION may be added to any of the above by requiring that the received signal be modulated for it to be recognized as a valid signal.

2.5. TRANSMISSION AND USER FUNCTION TIMING

The maximum duration of a single transmission may be varied by command. The transmission time-out timer may be set for no limit or up to several minutes that will comply with the regulations of some government agencies. A PROGRAMMABLE TIME-OUT MESSAGE is transmitted by the Mark 4 informing users that a time-out condition has occurred and the message is transmitted again when the received signal ceases and the time-out condition has passed.

User Functions are also subject to time-out limits that may be set by command for no limit, a specific time interval, or usage sensitive timing. When usage sensitive time limits are selected, the Mark 4 will automatically extend the function time-out limit in 45 second intervals as long as a signal is present. This feature will prevent any function from terminating abruptly during emergency situations. Function activity may be ended by the user by the transmission of a Clear Code.

2.6. STATION IDENTIFICATION

To comply with the FCC regulations regarding station identification, the Mark 4 causes an identification message to be sent at intervals not exceeding 10 minutes. Identification will be sent early if received signal ends shortly before an identification is due so that disturbance to repeater users is minimized. If a short transmission is made, one (1) minute, for example, then identification will occur nine (9) minutes later. The Mark 4 allows storage of several PROGRAMMABLE CALLSIGN MESSAGES that may be selected by command. The first identification message (stored as ID1) is recommended to contain a brief identification message because it will automatically be sent by the Mark 4 if a transmission is in progress and identification is due. This feature, therefore, will minimize disturbance to the users by switching to the shortest ID message. At all other times, the selected message will be sent.

2.7. TAIL AND COURTESY TONE (MESSAGE)

The time interval after received signal has ceased and while the repeater transmitter is still operating is called the repeater TAIL. If commanded to do so, the tail may be used to send a programmable COURTESY TONE/MESSAGE to inform repeater listeners that a transmission has ended and that the time-out timer has reset. Waiting for the courtesy tone/message will allow other stations to break in and will prevent a time-out condition. When the callsign identification is sent on the tail, the timer is automatically reset and the user may either wait for completion of the ID or begin talking over it. Informational TAIL MESSAGES, which are also programmable, may be sent.

2.8. TELEPHONE INTERCONNECT

Telephone calls originated from the Mark 4 may use one of two DIAL TYPES: dial pulse or DTMF signaling. Restrictions may be imposed on the telephone interconnect features by requiring CTCSS to be present or by inhibiting (disabling) them. Long distance calling may be restricted to certain call areas. PROHIBITED TELEPHONE NUMBERS may be programmed so that calls to a particular calling area or specific telephone number are excluded. TELEPHONE LINE SHARING is provided so that several Mark 4 repeaters may share a single telephone line.

The AUTOPATCH feature enables repeater users to originate telephone calls by entering the autopatch access code and then the number to be called. This number is stored by the Mark 4 so that at a later time another call may be made to the same numbers imply by transmitting the REDIAL access code.

The PRE-DIAL AUTOPATCH access code will cause the Mark 4 to automatically insert a programmed portion of frequently called telephone numbers so that the user only has to enter part of the total number. For example, if calls are often made to the 555 telephone calling area then a control operator could program 555 as the number sequence of the pre-dial autopatch. The user wishing to call the number 555-1234 needs only enter the pre-dial autopatch access code followed by the digits 1234. The predial autopatch may also be used to allow selective long distance calling even though long distance calling using the autopatch feature has been inhibited.

The AUTODIAL feature is intended to give repeater users quick access to as many as 12 emergency services by having these telephone numbers stored in the Mark 4. By simply transmitting the 3 or more digit autodial access code assigned to an emergency service, causes the interconnect to be activated.

EXTENDED AUTODIAL operates in the same manner as the autodial but provides for the storage of 200 telephone numbers with a unique access code for each. A repeater user may use this feature to automatically dial his/her own frequently called telephone numbers. These numbers may be programmed by control operators or by repeater users themselves.

REVERSE AUTOPATCH gives access to the repeater from the telephone network by answering incoming calls on the autopatch telephone line. This feature allows the caller, via the telephone line, to enter commands, to contact other repeater users by entering a REVERSE AUTOPATCH ALERT CODE or to activate other user functions. The length of time before the repeater phone is answered, PHONE RING TIME, may be selected by command. Also selected by command is the ANSWER STYLE, whether or not to wait for an access code to be entered, whether or not to send an alert signal. If an alert signal is sent by the Mark 4 in response to the Reverse Autopatch Alert Code, any repeater user may transmit the autopatch activate code to complete connection.

A separate COMMAND LINE INTERCONNECT is available as an option and will allow the Mark 4 to be connected to a second telephone line for command access exclusively. It operates in a similar manner to reverse autopatch but is not used for outgoing calls.

PHONE MUTING, if permitted and at the discretion of the user, provides a degree of privacy by preventing receiver audio from being re-transmitted on the repeater transmitter. When audio muting is used, only audio originating on the telephone line is sent on the repeater transmitter.

The REPEATER MONITORING feature allows control operators to briefly monitor repeater activity from the autopatch telephone line.

Autopatch, pre-dial autopatch, autodial, extended autodial, reverse patch, and phone muting are all User Functions.

2.9. OTHER USER FUNCTIONS

TIMER RESET/WAKEUP allows users to reset the transmission time-out timer when a transmission time-out condition has occurred. The signal must be strong enough to override the signal that caused the time-out. When the repeater is operating in the Wakeup access mode, this function is used to WAKEUP the repeater.

SLEEP function puts the repeater to sleep when the repeater is operating in the Wakeup access mode.

Twelve USER FUNCTION OUTPUTS are provided by the Mark 4 for controlling external equipment, such as directional antennas, remote bases, weather receivers, relays, etc. In addition, SERIAL and PULSE OUTPUTS are available for controlling this equipment either by themselves or in combination with other user function outputs. Besides the uses of pulses

described in this manual, further applications of this capability may be obtained from Kendecom, Incorporated.

Two LINK FUNCTION are provided for connecting or linking to equipment operating on other frequencies.

TONE PAD TESTS allow repeater users to test the performance of their DTMF tone pads to be sure that they are operating properly and can reliably access the Mark 4.

An INFORMATIONAL MESSAGE, which has been previously entered into memory by a control operator, may be accessed by any repeater user.

If DTMF control of other equipment not associated with Mark 4 is desired, the use of an IGNORE ACCESS code will allow unmuted DTMF tones to be re-transmitted to other equipment but ignored by the Mark 4.

The MULTIFAX OPTION provides the following User Functions:

- REAL-CLOCK TIME which can be accessed at any time;
- ANALOG/DIGITAL CONVERTER READOUTS which are available to obtain remote readings of voltage, current, temperature, or any other external analog sensors; and
- RECEIVER READOUT which allows repeater user to obtain a signal, frequency, and deviation readout of their signal as heard by the repeater.

The MESSAGE MASTER OPTION provides an ECHO function that allows repeater users to record and playback a sample of their own speech as a means to check their audio quality. Another feature of Message Master is the USER MESSAGE MAILBOXES. Two hundred different mailboxes are available for repeater users to record and store messages for other users. To save memory, individual messages may be erased by the user manually or, when enabled by command, the AUTO-ERASE feature will automatically erase messages after they have been played.

2.10. MESSAGES

There are a wide variety of fixed and programmable messages that may be sent from the Mark 4 to repeater users for the following purposes:

to indicate changes in external power source conditions;
to acknowledge that an access code has been received;
to identify the repeater station callsign(s);
to indicate that a function is active;
to indicate that a time-out limit has been reached; and,
to convey information which has been programmed into the Mark 4 by a control operator.

To avoid distractions, most messages are not sent following brief transmissions. Programmable messages are highly flexible and allow great variety. They may consist of Morse Code, synthesized voice on units equipped with Multifax option, or real-voice on units equipped with Message Master option. If desired, the CW, Multifax voice, and Message Master VOICE TRACKS may be combined in any programmable message. CW SPEED may be varied. The message may be used to control other equipment and, with Multifax, may include sensor readings.

Programmable messages consist of the following: 5 STATION IDENTIFICATION MESSAGES, 3 TAIL MESSAGES, 4 USER FUNCTION MESSAGES, A TIME-OUT MESSAGE, A COMMAND FUNCTION MESSAGE, AN INFORMATIONAL MESSAGE, COURTESY TONE/MESSAGE, 2 LINK MESSAGES, AND WITH MULTIFAX, 3 ANALOG/DIGITAL CONVERTOR MESSAGES AND A PERIODIC MESSAGE which may announce clock time and/or any other message at a selected time interval.

2.11. OTHER SPECIAL FEATURES

Some repeater groups wish to operate their repeater with different characteristics (parameters) during the day from those used at night. For this reason, the Mark 4 has a feature called PARAMETER SETS. Different operation characteristics may be programmed into each of the 5 sets and may be selected by a single command. On units equipped with Multifax, repeater operation may be switched between parameter sets automatically under the control of the real-time clock.

NOISE SUPPRESSION allows the Mark 4 to reject receiver noise and intermittent bursts of signal which may occur during abnormal propagation conditions.

COMMAND OUTPUT FUNCTIONS are available for exclusive use by control operators to control other equipment. (On Mark 4 repeaters, the first command function is wired to remotely control the squelch adjustment of the Mark 4.)

When testing and alignment of the Mark 4 is needed , the TEST MODE command allows it to be done slowly and easily by placing the Mark 4 in a special test mode where all time-out limits are disabled and certain operating conditions are established.

Provision have been made on the Mark 4 for RECEIVER Voting and SEQUENTIAL TONE GENERATION (two-tone paging signals). Information on this will be provided in a separate document.

3. COMMANDS

3.1. GENERAL COMMENTS

COMMANDS are access codes entered by control operators that set the operating characteristics of the repeater. Two levels of commands are recognized by the Mark 4. High level commands are only accepted by the Mark 4 when it is put in the PROGRAM MODE by a special access code. If this special access code is given to only certain highly qualified control operators, then only these few will have the ability to make major changes in the operating characteristics of the repeater. Low level commands may be entered at any time by any control operator. Less qualified control operators may be given these access codes to exercise more limited control over the operation of the repeater. It is recommended that DTMF levels on tone pads be adjusted to produce a transmitter deviation not exceeding 3.5 KHz (two tones).

Commands may always be entered from the local microphone, command receiver, and optional command phone line. Command access from the autopatch phone line and repeater receiver is available if permitted by the appropriate commands. It is not possible to deny command access to a source by entering a command from that source. For example, a command cannot be entered from the autopatch phone line that would deny future command access from the autopatch phone line. This safeguard prevents a control operator from accidentally disabling the only command access source in use.

When the Mark 4 is shipped from the factory, all command access codes are programmed to begin with the digit 9 and user function access codes with the digit 5 . All code descriptions contained in this part will begin, therefore, with the digit 9. If desired, the leading digit may be changed to any other digit or sequence of digits. This procedure will be discussed at the end of this section.

DTMF tones that are normally muted (non-retransmitted) can be unmuted by entering ** before the tone sequence (example, **125).

3.2. FIXED MESSAGES

Several messages are fixed within the Mark 4 program. On units equipped with Multifax, these messages will be in voice. If not, the equivalent CW message is sent. Fixed messages and their meanings are as follows:

CW MESSAGE	VOICE MESSAGE	MEANING
RRR	Thank you	A valid access code has been received and executed.
?	Error	A command access code has been received but it is improper and cannot be executed.

CLR	Clear	A clear code has been received and executed. An autodial access code has been entered but no telephone number has been programmed into it.
PF	Power Fail	A power failure has occurred. Power is now restored.
EP	Power Switch	Operation is from the emergency power source.
CP	Line Power	Commercial power has been restored.
OFF	Device OFF	The function selected is not in operation. This message is sent following command code access to indicate that the function, or capability has been turned off. The message is sent following user function access to indicate the function is inhibited.
ON	Device ON	Sent following command access to indicate that the function accessed has been turned on or uninhibited.
M	M	Sent following command access to indicate that muted phone calling is now permitted.
U	U	Sent following command access to indicate that all phone calls will be unmuted.
OK	OK	Sent in response to tone pad test access codes to indicate that the tone row/column is functioning.
BZ	Busy	Sent when an attempt is made to access a telephone line which is being shared among several Mark 4 and is already being used by another one of the repeaters.

3.3. FACTORY SET OPERATING CONDITIONS (PARAMETERS)

Mark 4 repeaters are shipped from the factory with operating conditions preset so that the repeater may be placed on the air immediately.

IMPORTANT: ALTHOUGH IDENTIFICATION MESSAGE 1, ID1 HAS BEEN SELECTED, NO INFORMATION HAS BEEN PROGRAMMED INTO ANY OF THE MESSAGES. WHEN THE REPEATER IS FIRST PLACED INTO SERVICE, THE CALLSIGN SHOULD BE PROGRAMMED INTO ID1 BY A CONTROL OPERATOR.

The following are commands and associated operating characteristics entered at the factory:

COMMAND	OPERATING CHARACTERISTIC
900	System Enabled
902	Phone Muting Permitted
904	Noise Suppression Off
9091	Carrier Access
9101	Autopatch Enabled
9110	Long Distance Calling Inhibited
9131	Autodial Access Permitted
9141	User Functions Enabled
9160	All Command Outputs Off
9184	All Access Code Accepted From Reverse Autopatch
9411	Select Identification Message 1 (ID1)
(P) 9512	Courtesy Tone On
(P) 9523	Transmission Time-out Limit = 3 Minutes
(P) 9534	User Function Time-out Limit = 12 Minutes
(P) 9543	Autopatch Time-out Limit = 3 Minutes
(P) 9554	Autodial/Extended Autodial Time-out = 12 minutes
(P) 9560	No Invalid Digit Access Limit
(P) 9570	Command Accepted from Repeater Receiver
(P) 9582	Reverse Autopatch Ring Time = 10 Seconds
(P) 9591	DTMF Signaling
(P) 9610	Wait for Reverse Autopatch Access Code

3.4. PROGRAM MODE

3.4.1. Passcode Command (P) (toggle)

The Mark 4 is shipped from the factory with the "passcode command" programmed as 321. The "passcode command" 321 toggles the PROGRAM MODE on and off. GENERALLY, HIGH LEVEL COMMANDS, THOSE HAVING ACCESS CODES GREATER THAN 950, MUST BE IN THE PROGRAM TO NOTIFY THE MARK 4 THAT CHANGES ARE ABOUT TO BE ENTERED. When the Program Mode is enabled, the fixed tail message, cw "P" or Multifax voice "Program" will be sent. The Mark 4 may be left in the Program Mode for as long as necessary. However, leaving the unit in the Program Mode for long periods of time compromises the security of the two level command structure. The Program Mode may be ended by entering the "passcode command" again. The Mark 4 will respond with the message "RRR" (CW) or "Thank You" (voice) to indicate that the Program Mode has been terminated.

The passcode command may be changed and this procedure can be found in INSTALLATION. Passcode codes may consist of up to 3 DTMF digits. When changing passcodes, care should be taken to choose a code that is not the same as the leading digits for any other group of access codes. Changing the passcode will automatically change the command access codes back to the leading digit, 9, (if the access codes were changed prior). This feature will also allow you to restore the command access codes to a fixed known value in the event that you have accidentally changed the command access codes to an unknown value.

(P) BEFORE ANY OF THE FOLLOWING COMMAND ACCESS CODES MEANS THAT THE MARK 4 MUST BE PUT INTO THE PROGRAM MODE BEFORE THE COMMAND CODE IS ENTERED.

NOTE: Password command implies alpha entries whereas Passcode commands could be alpha or numeric.

3.4.2. Changing the Passcode Command

The procedure for changing the passcode command that enables the Programming Mode is as follows:

1. Connect terminal TB8 to terminal TB17 on the rear panel terminal strip of the Mark 4.

2. Enter the passcode command from the local microphone (up to 3 digits).

3. Disconnect the connection between rear panel terminals TB8 and TB17,

3.5. MESSAGE PROGRAMMING

In the following discussion, Tables 3.1, 3.2 and 3.3 on pages 27, 28, and 31, respectively, will be used. For CW and Multifax, all words, numbers, and letters are made up of a 3 digit code. Each code is 1 message character. Any code above 254 in the Word List is two character spaces. All programmable repeater messages may consist of up to 9 message characters except identification messages that may consist of up to 19.

IN ALL EXAMPLES BELOW, SPACES HAVE BEEN USED FOR CLARITY IN READING. NO SPACES SHOULD BE PROGRAMMED UNLESS THEY ARE NEEDED TO SEPARATE WORDS.

3.5.1. Designing the Message

Suppose we wish to inform repeater listeners that a NET will be meeting tonight. Let's design the message "NET".

CW MESSAGE: Looking in Table 3.1, we find that the corresponding 3 digit code for "N" is 023, "E" is 014, and "T" is 029. Putting them together designs the "NET" message: (3 message characters)

023 014 029 (translated: NET)

MULTIFAX MESSAGE: Looking in Table 3.2, we find that the corresponding 3 digit code for the word "NET" is 201. Therefore, our Multifax message is: (1 message character)

201 (translated: NET)

MESSAGE MASTER REAL-VOICE MESSAGE: To design this message we will first have to record the message in our own voice. Fifty voice tracts (00 to 49) are available for recording. Let's use track 10 to record the message "NET MEETS TONIGHT". We have up to 30 seconds of record time per track. The access code to record a voice track is 945. So, to record on track 10, we use the access code 94510 and immediately without releasing the PTT button, we speak the message "NET MEETS TONIGHT".

94510 Speak Message

When the PTT button is released, the message will be played back as an acknowledgment that it was recorded. If desired, the message can again be played by using the PLAY MESSAGE command, 947. On track 10, that would be 94710. If you wish to erase a message, the ERASE MESSAGE command is 946. On track 10, the access code would be 94610.

94510 records message on track 10
94610 erases message on track 10
94710 plays message on track 10

Track 10 now contains our message. Since we need 3 digit codes for our message design we must add a 0 in front of the 10, 010. Our MM real-voice message is: (1 message character)

010 (translated: Track 10 message "Net Meeting Tonight"

Thus far, we have designed three types of messages.

3.5.2. Special Characters

Now that we have the design, we must tell the Mark 4 which of the 3 types of messages it will be sending: CW, Multifax voice, or Message Master real-voice. Table 3.3 on page 31 gives the set of special characters that do just this. UNITS EQUIPPED WITH THE MULTIFAX OPTION WILL SEND ALL MESSAGES USING SYNTHESIZED VOICE UNLESS WE TELL THE MARK 4 TO CHANGE ITS MESSAGE TYPE BY ENTERING ONE OF THE SPECIAL CHARACTERS.

The special character for sending CW is 090. If the unit is equipped with Multifax, we will need to precede our CW message design with 090: (four message characters)

090 023 014 029 (Translated: Send, in CW, the message NET)

Since our message will be automatically sent in Multifax voice, we do not need to precede our Multifax message with 094 (send Multifax Voice): (1 message character)

201 (Translated: Send, the message Net)

The special character for sending Message Master voice tracks is 095. Our Message Master real-voice message will be preceded by 095: (2 message characters)

095 010 (Translated: Send, in MM real-voice, voice track 10 message, Net Meets Tonight)

So far, we have designed the message and told the Mark 4 how to send it.

3.5.3. Programming the Message

Now we must program this message into one of the repeater messages so that we can inform the repeater listeners. Let's choose Tail Message 1 (TM1). The access code for programming TM1 is 926 and must now precede the special characters but it is not a message character

ALL MESSAGE PROGRAMMING MUST END WITH A "#" TO INFORM THE MARK 4 THAT THIS IS THE END OF THE ENTRY. The # is not a message character.

To program our CW message into TM1: (4 message characters)

926 090 023 014 029# (Translated: Via TM1, send in CW the message NET, end of entry)

To program our Multifax message into TM1: (1 message character)

926 201# (Translated: Via TM1, send the message Net, end of entry)

To program our MM message into TM1: (2 message characters)

926 095 010# (Translated: Via TM1, send in MM real-voice, track 10 message, end of entry)

3.5.4. Combining Message Types

All three types of our message may be combined and programmed into TM1 in the following manner: (8 message characters)

926 090 023 014 029 094 201 095 010#

Here we must use 094 to make the switch to Multifax voice.

(Translated: Via TM1, send in CW, the message NET, then send in Multifax voice, the message NET, then send in MM real-voice, voice track 10 message (Net Meets Tonight), end of entry)

3.5.5. Deleting a Message

We can program the same Tail Message as above with a different message and this will automatically delete the previous message or we can simply delete it as follows:

926#

3.5.6. Special Character Messages (Multifax)

Special character 096 allows Multifax readouts to be included in messages. The message characters are found in Table 3.2, beginning on Page 28.

For example, if we wish to program the Information Message to give both time and temperature we would enter:

935 096 001 002#

935 is the command to program the informational message
096 is the special message character
001 causes a clock time message to be sent
002 causes a temperature message to be sent

If the informational message is programmed in this manner, the message heard when accessed by a user (access code 508) will be: "The time is six thirty AM. The temperature is 83 degrees." The time given in the message is taken from the Multifax clock and the temperature is derived from the input to analog/digital converter number 1.

3.6. OTHER PROGRAMMING EXAMPLES

3.6.1. Informational Message

We wish to program the Informational Message to give a warning "Danger Severe Thunderstorms" using Multifax voice. Looking in Table 3.2 on Page 27, we find the 3-digit message code for DANGER is 067, SEVERE is 079, and THUNDERSTORMS is 075. The access code to program the Information Message is 935.

935 067 079 075#

Here we do not need the special character, 094, because units equipped with Multifax will automatically send voice unless we tell it otherwise.

3.6.2. Courtesy Tone

The Courtesy Tone may be programmed to be the CW letter K as follows if the unit IS NOT EQUIPPED with Multifax:

937 020#

937 is the Program Courtesy Tone access code and 020 is the message character for the CW letter K.

The Courtesy Tone may be programmed to be the CW letter K as follows if the unit IS EQUIPPED with Multifax:

937 090 020#

In this case, the special character must be included to tell the Mark 4 to send this message in CW and not voice.

3.6.3. Analog/Digital Converter (MF)

Analog/digital converter 3 is appropriately connected to measure repeater output power. To clarify the quantity that is being measured to the repeater users who access this reading, we can program analog/digital Converter 3 message to be "Watts" in the following manner:

942 060#

942 is the access code to program AD3 message and 060 will give the voice message "Watts". The user accessing this reading would hear, for example, "12 Watts", 12 being the analog/digital converter value.

3.6.4. Output Pulse Included In Message

We wish to program Identification message to trigger an external device to deliver a recorded message. We know that this recorded message can be accessed through User Function 5. Our command sequence is:

922 091 001#

922 is the access code to program ID2, 091 is the special character to allow output pulses to be sent in messages, and 001 is the special character message which pulses User Function 5.

3.6.5. DTMF Outputs

Special character 092 allows DTMF tone burst to be sent during messages which may be used for remote signaling. DTMF tones sent are determined by the 3 digit sequences entered following the special character.

In Summary

All messages entered into the Mark 4 must consist of the following:

First, access code to program a certain message (this is not a message character);
Next, up to maximum allowed message characters (none if deleting);
Next, # to end the entry (this is not a message character).

3.7. MESSAGE CHARACTER TABLES

3.7.1. TABLE 3.1 CW Character List

The following table gives a three digit number sequence for each character which may be used in composing CW messages.

CHARACTER	DIGIT CODE	CHARACTER	DIGIT CODE
0	000	N	023
1	001	O	024
2	002	P	025
3	003	Q	026
4	004	R	027
5	005	S	028
6	006	T	029
7	007	U	030
8	008	V	031
9	009	W	032
A	010	X	033
B	011	Y	034
C	012	Z	035
D	013	/	036
E	014	?	037
F	015	.	038
G	016	WORD SPACE	039
H	017	TTTTTTTT	040
I	018	DE	041
J	019		
K	020		
L	0210		
M	022		

Set Pitch

679 Hz	042	1209 Hz	046
770 Hz	043	1336 Hz	047
852 Hz	044	1477 Hz	048
941 Hz	045		

Set Speed (Sequences 050 through 059)

Slowest	050	Fastest	059

Set Amplitude

Low Level	060	High Level	061

3.7.2. Multifax Word List

Software Version 3.6

(f) indicates word in female voice space between words is 254

010 A
326 A (f)
100 AM
246 AM (f)
192 abort
193 about
211 action
194 adjust
212 affirmative
321 afternoon (f)
661 air
066 alert
086 all
601 alpha
055 alternate
062 amps
419 amateur (f)
084 and
169 answer
129 area
027 are
359 are (f)
089 at
379 at (f)
008 ate
303 ate (f)
201 auto
130 automatic

011 B
342 B (f)
199 base
406 base (f)
199 bass
406 bass (f)
011 be
342 be (f)
011 bee
342 bee (f)
161 below
131 between
662 blowing
132 bravo
133 brake
133 break
159 broken
602 button
186 buy
186 by
186 bye

012 C
343 C (f)
134 calibrate
050 call
378 call (f)
135 cancel
136 caution
664 ceiling
665 Celsius
137 change
603 Charlie
123 check
138 circuit
081 clear
604 clock
335 club
196 code
407 code (f)
139 complete
140 connect
213 contact
047 control
412 control (f)
605 crank
160 currant
026 cue
358 cue (f)
141 cycle

013 D
344 D (f)
067 danger
323 day (f)
142 days
142 daze
666 decreasing
082 degree
606 delta
036 device
202 dial
051 direction
607 display
667 divided
143 door
404 door (f)
144 down
668 drizzle
410 dues (f)
669 dust

014 E
346 E (f)
070 east
608 echo
008 eight (8)
303 eight (8) (f)
110 eighteen 18)
313 eighteen (18) (f)
118 eighty (80)
609 electrician
103 eleven (11)
306 eleven (11) (f)
214 emergency
037 enter
610 equal
670 equals
122 error
671 estimate
215 evacuate
322 evening
018 eye
350 eye (f)
611 exit

015 F
347 F (f)
190 fail
216 failure

Multifax word list continued

672 Fahrenheit
182 fast
613 feat
403 feat (f)
613 feet
403 feet (f)
217 filed
107 fifteen (15)
310 fifteen (15) (f)
115 fifty (50)
318 fifty (50) (f)
054 fire
005 five (5)
300 five (5) (f)
614 flow
162 fog
004 for
004 fore
253 fore (f)
004 four (4)
253 four (4) (f)
114 forty (40)
317 forty (40) (f)
106 fourteen (14)
309 fourteen (14) (f)
615 foxtrot
077 freezing
045 frequency
373 Friday (f)
038 from

016 G
348 G (f)
617 gait
616 gallons
617 gate
618 gauge
016 gee
348 gee (f)
619 get
052 go
388 go(f)
324 good (f)
133 great
332 great (f)
175 green
673 Greenwich

017 H
349 H (f)
078 hail
163 half
207 ham
206 hamfest
218 have
325 have (f)
675 haze
083 heavy
621 Henry
056 hertz
064 hi
064 high
402 high (f)
219 hold
383 home (f)
128 hour
382 hour (f)
188 hours
339 hours (f)
120 hundred (100)
376 hundred (100) (f)
056 hurts

018 I
350 I (f)
676 ice
220 identify
221 immediately
187 in
381 in (f)
677 increasing
622 India
679 indicated
222 information
623 inspector
040 intruder
085 is
245 is (f)

019 J
351 J (f)
624 Juliet

020 K
352 K (f)
058 kilo

148 knot

021 L
353 L (f)
680 land
145 left
146 light
625 lima
124 line
063 low
401 low (f)

022 M
354 M (f)
039 machine
331 machine (f)
626 manual
147 measure
337 meeting
414 meeting (f)
059 mega
209 messages
057 meter
627 micro
628 mike
681 miles
629 mill
630 milli-
660 million
179 minus
409 minute (f)
168 minutes
682 missed
682 mist
683 moderate
369 Monday (f)
165 more than
320 morning (f)
631 motor
632 move
684 moving

023 N
355 N (f)
148 naught
405 naught (f)
223 negative
336 net

Multifax word list continued

417 net (f)
328 night
009 nine (9)
304 nine (9) (f)
111 nineteen (19)
314 nineteen (19) (f)
119 ninety (90)
224 no
068 North
148 not
405 not (f)
639 number

024 O
356 O (f)
686 obscured
685 o'clock
248 o'clock (f)
087 of
041 off
386 off (f)
389 office (f)
024 oh
249 oh (f)
635 ohms
042 on
385 on (f)
001 one (1)
250 one (1) (f)
088 open
377 open (f)
048 operator
180 Oscar
128 our
382 our (f)
188 ours
339 ours (f)
126 out
189 over
687 overcast

025 P
357 P (f)
101 PM
247 PM (f)
636 papa

688 partially
637 pass
149 passed
149 past
203 patch
413 pay (f)
689 pellets
700 per
408 per (f)
638 percent
204 phone
411 phone (f)
639 pico
416 please (f)
178 plus
061 point
208 police
150 position
043 power
400 power (f)
197 practice
640 press
151 pressure
641 probe
240 program (f)
642 pull
643 push

026 Q
358 Q (f)
644 Quebec

027 R
359 R (f)
205 radio
226 radios
073 rain
152 range
065 ready
174 red
198 remote
177 repair
044 repeat
241 repeater
418 repeater (f)
153 right
227 Roger

645 Romeo

028 S
360 S (f)
170 safe
701 sand
374 Saturday(f)
702 scattered
012 sea
343 sea (f)
664 sealing
012 see
343 see (f)
646 seconds
228 security
229 select
154 set
007 seven (7)
302 seven (7) (f)
109 seventeen (17)
312 seventeen (17) (f)
117 seventy (70)
079 severe
166 showers
155 shut
647 sierra
006 six (6)
301 six (6) (f)
108 sixteen (16)
311 sixteen (16) (f)
116 sixty (60)
703 sleet
181 slow
648 smoke
072 snow
069 South
183 speed
156 start
157 stop
074 storm
375 Sunday (f)
125 switch

029 T
361 T (f)
649 tango
029 tea

Multifax word list continued

361 tea (f)
191 temperature
102 ten (10)
305 ten (10) (f)
053 test
238 thank (f)
046 the
330 the (f)
704 thin
705 thinly
003 three (3)
252 three (3) (f)
105 thirteen (13)
308 thirteen (13) (f)
113 thirty (30)
(f)
316 thirty (30) (f)
334 this (f)
242 this is
600 thousand
341 thousand (f)
372 Thursday (f)
075 thunderstorms
121 time
244 time (f)
049 timer
706 times
002 to
327 to (f)
380 today (f)
195 tomorrow
338 tonight
002 too
327 too (f)
650 tool
076 tornado
231 traffic
370 Tuesday (f)
707 turbulence
171 turn
384 turned (f)
104 twelve (12)
307 twelve (12) (f)
112 twenty (20)
315 twenty (20) (f)
002 two (2)
251 two (2) (f)

030 U
362 U (f)
158 up
651 under
652 uniform
653 unit
708 unlimited
232 use
233 use (verb)

031 V
363 V (f)
709 variable
654 valve
234 verify

655 Victor
710 visibility
127 volts

032 W
364 W (f)
172 wait
235 warning
236 watch
060 watts
237 way
167 weather
371 Wednesday (f)
333 week (f)
172 weight
200 welcome
329 welcome (f)
071 west
167 whether
656 whiskey
711 white
034 why
366 why (f)
210 will
080 wind
001 won
250 won (f)
340 words (f)
153 wright
153 write
033 X

365 X (f)
657 X-ray

034 Y
366 Y (f)
658 Yankee
176 yellow
030 you
362 you (f)
415 your (f)

035 Z
367 Z (f)
000 zero (0)
368 zero (0)

659 Zulu

3.7.3. SPECIAL CHARACTERS

The following list of special characters are used to tell the Mark 4 which types of messages are to be sent. They may be used to switch between types within messages.

Special character 091 followed by any of the digit sequences will cause the respective logic output to be pulsed during messages.

The special character 096 followed by any of the digit sequences will cause their respective message to be included in messages.

Special Character	Action
090	Begin sending CW
091	Toggle logic outputs

Digit Sequence	Output Pulsed
001	User function 6
002	User function 7
003	User function 8
004	User function 9
005	User function 10

092	Begin sending DTMF digits
093	Begin sending sequential tones
094	Begin sending Multifax voice
095	Begin sending Message Master voice tracks
096	Begin sending special message

Digit Sequence	Reading
000	Receiver readout
001	Greeting followed by "the time is" followed by the time in a female voice
002	Message, "The temperature is XX degrees." XX is a reading based on analog/digital converter input 1.
003	Analog/digital converter 2 input scaled to the range 0-120 volts.
004	Analog/digital converter 3 input scaled to the range 0-120.

	005	Analog/digital converter 4 input scaled to the range 0-25.
	006	Analog/digital converter 5 input scaled to the range of 0-25.
	007	Time in a female voice.
	008	Time in a male voice.
	009	"The time is" followed by the time in a male voice.
098	Begin sending callsign list.	
	000	Send callsign list - quit, if no message exists.
	001	Send "No Messages" if no message exists.

3.8. BASIC REPEATER OPERATION

3.8.1. System Enable/Disable (Toggle) 900

The command disables repeater transmitter operation and all user functions. The command operates in a toggle fashion. The first time the command is entered, the repeater system is disabled and the next time the command is entered the system is enabled. Command access codes are accepted when the system is disabled and incoming telephone calls answered for the purpose of receiving commands.

901 Test Mode

This is used for testing and alignment of the Mark 4 and its procedure and use will be found in INSTALLATION & MAINTENANCE.

3.8.2. Noise Suppression (Toggle) 904

When this command code is entered, the Mark 4 will respond with a message "ON" in CW or "DEVICE ON" in voice. Entering it again, the Mark 4 will respond with "OFF" in CW or "DEVICE OFF" in voice. With the noise suppression filter ON, the additional noise rejection causes a slight delay in the response to a valid signal. Therefore, under normal propagation conditions, it is suggested that the filter not be used.

3.8.3. Clear Control Message 905

This command removes two of the three fixed tail messages generated by the Mark 4 to indicate abnormal power or other abnormal operating conditions, "PF" and "CP" or "Power Fail" and "Line Power". The message "EP" or "Power Switch" will be present whenever the Mark 4 is operating from emergency power and may not be removed with this command.

3.8.4. VOX Operation (Toggle) 906

When using VOX operation, the Mark 4 will not respond to unmodulated received carriers. When VOX operation is off, the repeater will be in a carrier-only operation.

3.8.5. Force Processor Reset (Message Master)

It is theoretically possible, though unlikely, that the microprocessor in the Message Master could get disturbed by a power transient which does not affect the Mark 4 processor board microprocessor. If this condition were to occur, the Mark 4 would operate normally but the Message Master would not respond to access codes for recording and playing speech. The Force Processor Reset command is provided to remedy this condition by forcing both microprocessors to reset. Procedure for use is simply for a control operator to enter 907 and wait 10 seconds for reset cycle to complete. Operation will be restored and PF or Power Fail message will be sent on tail.

3.8.6. Repeat Permissions (Modes of Access)

The following commands determine the conditions that must be met by a received signal for normal repeater operation (re-transmission of a received signal). These commands do not affect the operation of user functions. This means that user functions, such as autopatch, may still be used even if repeat operation is disabled. Further restrictions can be also be added by setting the repeater in VOX operation.

9090 Repeat Operation Disabled
9091 Carrier Access (open repeater)
9092 CTCSS required for repeat operation
9093 DTMF Wakeup (access under USER FUNCTION control)
9094 CTCSS or DTMF Wakeup (either)

3.8.7. Set CW Message Speed

The following commands set the nominal speed for all CW messages:

9170 through 9179: Command 9170 is fastest
9179 is slowest

3.8.8. Select Callsign Identification Message

Five different callsign identification messages may be stored simultaneously in the Mark 4. The selected callsign message will be used whenever the repeater is inactive. When the repeater is active, callsign identification message 1, ID1, will automatically be substituted as was described in the REPEATER FEATURES section.

9411 Select callsign identification message 1, ID1
9412 Select callsign identification message 2, ID2
9413 Select callsign identification message 3, ID3
9414 Select callsign identification message 4, ID4
9415 Select callsign identification message 5, ID5

3.8.9. Program Identification Message

The following commands allow the information in identification messages to be entered. The maximum number of message characters allowed is 19. It is recommended that ID1 message be very brief (callsign letters only and in CW - see pages 3-5, 3-9, and 3-12).

921 Program identification message 1; ID1
922 Program identification message 2, ID2
923 Program identification message 3, ID3
924 Program identification message 4, ID4
925 Program identification message 5, ID5

3.8.10. Tail Descriptions

(P) 9510 No tail. Repeater transmitter ceases immediately when received signal ceases. No tail or acknowledgment messages are sent.
(P) 9511 Quiet 5-second tail
(P) 9512 Courtesy tone (message) on/off (toggle)
(P) 9513 Tail Message 1 (TM1) sent following the tail. (toggle)
(P) 9514 Tail message 2 (TM2) sent following the tail. (toggle)
(P) 9515 Tail message 3 (TM3) sent following the tail. (toggle)

Only one of the three tail messages may be selected at any time. Selecting another tail message will automatically deselect any prior selection. Tail messages are sent 10 seconds after the repeater tail. They are not sent following brief transmissions.

3.8.11. Program Tail Messages

The following commands allow information to be entered into the tail messages and stored in memory. The maximum number of message characters is 9.

926 Program tail message 1, TM1
927 Program tail message 2, TM2
928 Program tail message 3, TM3

3.8.12. Program Courtesy Tone

Many repeaters use a courtesy tone to indicate to repeater users that the transmission time-out timer has been reset. In the Mark 4, the courtesy tone may be programmed to be a single tone or a lengthier message. The following command allows the desired message to be entered into the courtesy tone. The maximum number of message characters is 9.

937 Program Courtesy Tone, CT

3.8.13. Transmission Time-out Limit

The following commands select the time-out limit for transmission length.

(P) 9520 No time-out limit
(P) 9521 1 minute time-out limit
(P) 9522 2 minute time-out limit
(P) 9523 3 minute time-out limit
(P) 9524 4 minute time-out limit
(P) 9525 5 minute time-out limit
(P) 9526 6 minute time-out limit
(P) 9527 7 minute time-out limit
(P) 9528 8 minute time-out limit
(P) 9529 9 minute time-out limit

3.8.14. Program Transmission Time-out Message

A time-out message is sent whenever the transmission time-out limit is exceeded. It is sent immediately before the transmitter is turned off to inform listeners that a time-out has occurred, and it is sent again when the received signal ceases to inform the user who caused the time-out.

The following command allows a message to be entered into the transmission time-out message. The maximum number of message characters is 9.

936 Program Transmission Time-out Message, TO

3.8.15. Invalid Access Limit

The following commands set the number of invalid DTMF digits that are allowed before further access attempts are ignored.

9560 No limit
9561 8 invalid digits allowed
9562 12 invalid digits allowed

9563 16 invalid digits allowed
9564 20 invalid digits allowed
9564 24 invalid digits allowed

3.8.16. Command Access from Repeater Receiver

These commands cannot be entered from the repeater receiver.

9570 Commands accepted from repeater receiver
9571 Commands accepted from repeater receiver if CTCSS is present
9572 Commands not accepted from repeater receiver

These commands do not affect the local microphone.

3.9. TELEPHONE INTERCONNECT COMMANDS

3.9.1. Phone Muting Permission (toggle)

When this command is entered, the repeater responds with the letter M to indicate that transmission of receiver audio during phone calls may be muted if a user desires to do so. The Mark 4 responds to the second entry of this command with the letter U indicating that the muting capability is no longer available and all future telephone calls will be unmuted.

3.9.2. Repeater Monitoring

To monitor repeater activity from the autopatch telephone line, the command must be entered from the autopatch telephone line. When the command is entered, audio from the repeater receiver will be routed to the phone line for a period of 2 minutes. Phone line audio will not be routed to the repeater transmitter. Monitoring may be terminated before the 2 minute time limit by entering the autopatch clear code.

3.9.3. Dialing Type

The type of dialing selected using these commands is used for originated calls; autopatch, autodial, and extended autodial. When the Mark 4 is shipped from the factory, it is set for the DTMF dialing.

9590 Select dial pulse signaling
9591 Select DTMF signaling

3.10. AUTOPATCH

3.10.1. Autopatch Operation

The following commands set the conditions that must be met for autopatch and redial access. They do not affect reverse autopatch, autodial, or extended autodial access.

9100 Autopatch disabled (access inhibited)
9101 Autopatch enabled (access permitted)
9102 CTCSS required for autopatch access

3.10.2. Select Autopatch/Redial Time-out Limit

(P) 9540 No autopatch/redial time-out limit
(P) 9541 Autopatch time-out limit = 1 minute
(P) 9542 Autopatch time-out limit = 2 minutes
(P) 9543 Autopatch time-out limit = 3 minutes
(P) 9544 Autopatch time-out limit = 6 minutes
(P) 9545 Autopatch time-out limit = 9 minutes
(P) 9546 Autopatch time-out limit = 12 minutes
(P) 9547 Autopatch time-out limit = 15 minutes
(P) 9548 Autopatch time-out limit = 18 minutes
(P) 9549 Autopatch time-out limit = usage sensitive

3.10.3. Autopatch Dialing Restrictions

The following commands allow restrictions to be imposed on long distance dialing with the primary autopatch. They do not affect predial-autopatch, autodial or extended autodial operation.

9110 Long distance calling restricted. Calls having a 0 or 1 as the first digit will be blocked. Dialing more than 8 digits will cause the call to be canceled.

9111 Calls may have only 1 as the first digit. No more than 8 digit numbers will be accepted.

9112 Calls may have 1 or 0 as the first digit and may have more than 8 digits if CTCSS is present.

9113 Calls may have 1 or 0 as the first digit and may have more than 8 digits if the command signal is present (see 9112 above).

9114 No dialing restrictions.

3.10.4. Programming Prohibited Telephone Numbers

(P) 974 Program prohibited telephone number 1
(P) 975 Program prohibited telephone number 2
(P) 976 Program prohibited telephone number 3
(P) 977 Program prohibited telephone number 4
(P) 978 Program prohibited telephone number 5

These commands allow autopatch telephone calls to specific telephone numbers or calls to specific calling areas to be blocked. Each of the above codes can contain up to 7 digits. Prohibited telephone numbers only block calls originated with the autopatch and redial access codes, not autodial or extended autodial. For these commands to be accepted, the Mark 4 must be in the Program Mode (P).

If we want prohibited telephone number 1 to be 555-1234, the Program Prohibited Telephone Number 1 access code, 974, must be followed by the number we wish to prohibit followed by a #.

974 555 1234#

If we wish to block the whole 555 calling area, then:

974 555#

3.10.5. Programming Predial Autopatch Digits

(P) 962 PROGRAM FIRST PREDIAL AUTOPATCH DIGITS
(P) 963 PROGRAM SECOND PREDIAL AUTOPATCH DIGITS

As was described in the REPEATER FEATURES section of this manual, prefixes to telephone numbers can be programmed into the Predial Autopatches so as to reduce the number of digits which repeater users must enter to place a telephone call. For example, if telephone calls are frequently made to telephone exchange 362, then the predial autopatch access code entered by a user will automatically dial the 362 and the user only need to enter the rest of the number.

The predial autopatches may contain a maximum of 6 digits so they may contain an area code and a telephone office code (e.g. 212 362). To program predial autopatch digits a control operator should enter the command access code followed by the digits to be programmed followed by a #. For example, to program the first predial autopatch with the digits 362 would be done as follows:

962 362#

Do not put spaces between numbers when they are being entered into the Mark 4.

The first and second predial autopatch programming codes operate in the same manner.

3.11. AUTODIAL

3.11.1. Autodial Operation

The following commands set the conditions that must be met for autodial access. These commands do not affect extended autodial operation.

9120 Autodial disabled (access inhibited)
9121 Autodial enabled (access permitted)
9122 CTCSS required for autodial access

3.11.2. Extended (User) Autodial Operation

The following commands set the conditions that must be met for extended autodial access:

9130 Extended autodial disabled (access inhibited)
9131 Extended autodial enabled (access permitted)
9132 CTCSS required for extended autodial access

3.11.3. Select Autodial/Extended Autodial Time-out Limit

(P) 9550 No autodial time-out limit
(P) 9551 Autodial time-out limit = 3 minutes
(P) 9552 Autodial time-out limit = 6 minutes
(P) 9553 Autodial time-out limit = 9 minutes
(P) 9554 Autodial time-out limit = 12 minutes
(P) 9555 Autodial time-out limit = 15 minutes
(P) 9556 Autodial time-out limit = 18 minutes
(P) 9559 Autodial time-out limit = usage sensitive

3.11.4. Programming Autodial/Extended Autodial Telephone Numbers

When the Mark 4 is shipped from the factory, the beginning digit of autodial and extended autodial access codes are set as given below. Also given below, are the number of telephone numbers that may be simultaneously stored in each group:

Autodial functions	8	(12) (Begins with 810-822
Extended autodial (Group 1)	6	(100)
Extended autodial (Group 2)	7	(100)

The Mark 4 must be in the Programming Mode to enter or change autodial and extended autodial telephone numbers so that it knows it is going to receive access codes for the purpose of changing some information in its memory. When an autodial number is being programmed, the autodial access code must precede the telephone number. If the Mark 4 is not in Program Mode when the autodial access code is entered, it will begin to autodial an old number in its memory. Telephone numbers programmed may be up to 11 digits (or 22 digits using two consecutive slots starting with an even-numbered slot). ALL ENTRIES MUST END WITH #.

The following example illustrates the programming of telephone number 555-1234 into extended autodial 700 and telephone number 555-6789 into extended autodial 754.

A control operator enters: 321 (enable the Program Mode)

The repeater responds : "P" (CW) or "Program" (Voice)

Control operator or
repeater user enters: 700 555 1234#

The repeater responds : repeats back the phone number (If the number was incorrect, it can be re-entered.)

Control operator or
repeater user enters: 754 555 6789#

The repeater responds : repeats back the phone number

Control operator enters : 321 (Program mode is ended)

The repeater responds : "RRR" (CW) or "Thank You" (Voice)

In this example, we programmed two extended autodial numbers, but when in the Program Mode any number of telephone numbers may be programmed.

Telephone numbers may be deleted if no longer desired. It is not necessary to delete a number before entering a new number. Procedure to delete the number in access code 700 is:

Enable Program Mode, 321 - Enter 700# - Disable Program Mode, 321

To check to make sure the number was deleted, access code 700 may be entered and the Mark 4 should respond with the message "CLEAR".

3.11.5. Voice Paging

This feature allows callers from the Reverse Autopatch telephone line to direct their telephone calls to specific repeater users with Multifax voice paging.

For example, assume that autodial access code 600 is assigned to repeater user W1XYZ. A caller on the reverse autopatch telephone line can cause the MicroFax voice message "CALL FOR W1XYZ" to be sent on the repeater transmitter by entering the access code 600 from the reverse autopatch telephone line.

To use this feature, the callsigns of each repeater user associated with autodial telephone numbers 600 through 799 must be programmed into the Mark 4. To program these callsigns, a control operator first places the repeater into the "Enter ID" mode by entering the command access code 9501. (The Mark 4 should NOT be in the Program Mode when entering this access code.) When this access code is entered, the Mark 4 will respond on the repeater tail with the message "Enter ID".

Callsign identification information can now be entered by entering the autodial number of the repeater user followed by the 3-digit message characters of the repeater users callsign followed by the # character. The 3-digit message characters are those given in Table 3.1 of the manual. Thus, to program the callsign W1XYZ for user 600, enter:

600 032 001 033 034 035 #

where,

600 is the autodial code assigned to the user,
032 001 033 034 and 035 are the 3-digit message characters for W1XYZ from Table 3.1, and
# indicates that all the information has been entered.

Each callsign may contain a maximum of six characters (our example, W1XYZ, contains five characters).

Callsigns may be entered for users 601 through 799 in similar fashion. When all callsigns have been entered, return the repeater to normal operation by entering the access code 9500 to end the "Enter ID" mode.

3.11.6. Pause During Autodialing

Some telephone equipment requires a brief pause in dialing when connecting calls to an outside line. The Pause during Autodialing feature allows pauses to be programmed into Mark 4 autodial numbers for use in these applications.

Pauses may be entered when programming autodial phone numbers by using touchtone * key. Each * entry generates a pause of about one second. Longer pauses can be generated by pressing the * key repeatedly.

Example: To program extended autodial user 600 with the telephone number 95551212 with a 2-second pause following the digit 9:

enter: 321	(place Mark 4 in program mode)
enter: 6009**5551212#	(program telephone number
enter: 321	(end program mode)

(Each * is counted as a digit by the Mark 4, i.e., 9**5551212 in the example above, is counted as a 10 digit number. Programmed numbers having more than 12 digits, including pause characters, should be programmed as Long Autodial Numbers.)

3.12. REVERSE AUTOPATCH

3.12.1. Reverse Autopatch Operation

The following commands determine which access codes will be accepted from the reverse autopatch telephone. COMMANDS 9180 AND 9183 MAY NOT BE ENTERED FROM THE REVERSE AUTOPATCH TELEPHONE LINE. They may be entered locally, from the command input, or from the repeater receiver (if the repeater receiver is selected to accept command inputs).

9180 Incoming telephone calls not answered. (Neither
No commands or user function codes may be entered from the telephone line. The telephone line may still be used for outgoing calls {autopatch, etc.})

9181 Command codes accepted from the telephone line. User reverse autopatch alert code not accepted.

9182 Command access codes and user reverse autopatch alert code accepted from the telephone line. Other user function codes not accepted.

9183 User function access codes accepted from the telephone line. Command access codes not accepted.

9184 All command and user function access codes accepted from the telephone line.

3.12.2. Phone Ring Time

The following commands set the length of time which incoming telephone calls will be allowed to ring before being answered by the Mark 4. On units equipped with the optional command telephone line interface, these commands also set the ringing time before answer for incoming calls on the command telephone line.

(P) 9580 Answer immediately
(P) 9581 Wait 5 seconds before answering
(P) 9582 Wait 10 seconds before answering
(P) 9583 Wait 15 seconds before answering
(P) 9584 Wait 20 seconds before answering
(P) 9585 Wait 25 seconds before answering
(P) 9586 Wait 30 seconds before answering

3.12.3. Reverse Autopatch Answering

The following commands determine the action that will be taken by the Mark 4 when an incoming (reverse autopatch) call is answered. Reverse autopatch response is also affected by command 9180. After the call is answered, an access code must be entered within 15 seconds or the call will be automatically disconnected. If commands are to be entered, the first answering style should be selected. The alert signal sent by the Mark 4 consists of a simulated ring.

(P) 9610 Wait for access code to be entered from telephone line. If reverse autopatch alert access code is entered, send the alert signal to the repeater transmitter.

(P) 9611 Send the alert signal to the repeater transmitter as soon as an incoming telephone call is answered.

(P) 9612 Connect the telephone to the repeater transmitter as soon as an incoming telephone call is answered. Autopatch operation begins immediately. No access code is necessary and no alert signal is sent.

(P) 9613 Wait for reverse autopatch access code (505) or voice page code (600-799) then send alert or page/alert.

3.12.4. Command Line Interconnect

The optional Command Telephone Line Interconnect arrangement allows the Mark 4 to be connected to a second telephone line exclusively for command access. Command access is, therefore, guaranteed even when a telephone call is in progress on the autopatch phone line.

The command line interconnect operates in a similar manner to Reverse Autopatch but only accepts incoming calls and is not used for outgoing calls. Phone Ring time is identical to that used on the autopatch phone line which is set by command. After the Mark 4 answers, access codes may be entered for a period of 40 seconds and then the call will be automatically disconnected.

3.13. USER FUNCTION COMMANDS

The following commands do not affect telephone interconnect functions.

3.13.1. User Function Operation

9140 User functions disabled (access inhibited)
9141 User functions enabled (access allowed)
9142 CTCSS needed to access user functions

3.13.2. User Function Time-out Limit

The time-out warning sent by the Mark 4 consists of periodic "beeps" for a period of 10 seconds prior to time-out. When usage sensitive timing is selected, time-out can be extended for 45 seconds by a short burst of receiver signal to the repeater.

(P) 9530 No time-out limit
(P) 9531 3 minute time-out limit
(P) 9532 6 minute time-out limit
(P) 9533 9 minute time-out limit
(P) 9534 12 minute time-out limit
(P) 9535 15 minute time-out limit
(P) 9536 18 minute time-out limit
(P) 9537 21 minute time-out limit
(P) 9538 24 minute time-out limit
(P) 9539 User function timing is usage sensitive and will not time out as long as repeater is in use.

3.13.3. Program User Function Messages

Of the 12 User Function Outputs used for controlling external equipment, four have programmable tail messages that are heard if received signal has been present for 5 seconds or longer. The following commands allow messages to be entered that will inform users that the function is active. A maximum of 9 message characters are allowed.

929 Program user function 1 message, UF1
930 Program user function 2 message, UF2
931 Program user function 3 message, UF3
932 Program user function 4 message, UF4

Example, User Function 1 controls a north facing antenna and User Function 2 controls a south facing antenna. The messages respectively could be CW "N" or voice "North" and CW "S" or voice "South". These messages will be heard on the tail when either function is active.

3.13.4. Program Information Bulletin Message

The following command will allow information to be programmed into the information bulletin that can be accessed by users. The maximum of 9 message characters are allowed.

935 Program Information Bulletin message, IB

3.13.5. Program Link Messages

The following commands allow information to be entered into the Link messages that will be heard on the tail when the link function is active. A maximum of 9 message characters is allowed.

938 Program Link 1 message, LK1
939 Program Link 2 message, LK2

Two links operating on different frequencies can either be accessed individually by the user or connections between the two may be automatically done through the Link Message. If the relay to make this connection is in one of the User Function Outputs, then, for example, LK2 message could be programmed to activate both the link function and the user function output.

3.13.6. Program Analog/Digital Converter Messages (Multifax)

Five analog inputs are available which may be used for monitoring other equipment at the repeater site and may be accessed by all users. Three of these can have programmable messages to help clarify the quantity that is being measured. (AD1 and AD2 have fixed messages of "The Temperature is XX degrees" and "Volts", respectively.) The linear scaling range is given after each command below. The following commands allow information to be entered into these messages. A maximum of 9 message characters is allowed.

942 Program analog/digital converter 3 message, AD3 (0-120)
943 Program analog/digital converter 4 message, AD4 (0-120)
944 Program analog/digital converter 5 message, AD5 (0-25)

Example: If analog/digital converter 3 is appropriately connected to measure repeater output power, then message AD3 might be programmed as the message "Watts". When this readout is accessed by a user, the Mark 4 would then respond with, for example, "12 Watts".

3.13.7. User Mailboxes (Message Master)

Two hundred different user mailboxes are available for users to record messages for each other. For ease of use, these mailboxes use access codes similar to those used for the extended autodial capability. Typically, each repeater user would be assigned an access code to contain his/her own extended autodial telephone number. These same access codes are used for that user's voice mailbox. (See page 7-3 and Page 7-4.)

3.13.8. Auto-Erase

Voice storage capacity of the Message Master is limited to 8 minutes of real speech. Optimum use of this capacity requires that mailbox messages be erased after the messages are played. This can be done manually by the user or done automatically using the Auto-Erase feature. This frees memory for later use. AUTO-ERASE ONLY AFFECTS USER MAILBOX MESSAGES AND DOES NOT ERASE VOICE TRACKS RECORDED BY COMMAND.

The commands for enabling or disabling this feature are as follows:

(P) 9810 Enable auto-erase feature
(P) 9811 Disable auto-erase feature

3.13.9. Set User Message Maximum Record Time

Another means of conserving memory is to limit the maximum length of user mailbox messages with the following commands:

			MM SPEED
(P)	9820	User message recording disabled (This also disables Echo function)	Inhibited
(P)	9821	8 second maximum record time	17 KHz
(P)	9822	12 second maximum record time	17 KHz
(P)	9823	16 second maximum record time	17 KHz
(P)	9824	20 second maximum record time	17 KHz
(P)	9825	9 second maximum record time	24 KHz
(P)	9826*	12 second maximum record time	24 KHz
(P)	9287	15 second maximum record time	24 KHz
(P)	9828	8 second maximum record time	32 KHz
(P)	9829	16 second maximum record time	32 KHz

* Power reset uses this value

These commands only affect user mailbox record times. Voice tracks recorded by command always have a maximum time of 30 seconds.
Command Voice Tracks:

94500 - 94529 are fixed at 32 KHz
94530 - 94550 are fixed at 24 KHz

3.13.10. Erase Messages

The following commands allow erasing of all user mailbox messages and/or all voice tracks:

9480 Erase all user mailboxes
9481 Erase all messages

3.14. PERIODIC ANNOUNCEMENT COMMANDS (Multifax)

3.14.1. Periodic Announcement Message Interval

The following commands set the interval at which the periodic announcement message is sent. This message is controlled by the real-time clock.

9080 Send periodic announcement every 15 minutes
9081 Send periodic announcement every 1/2 hour
9082 Send periodic announcement every hour
9083 Off

3.14.2. Program Periodic Announcement

The following command allows information to be entered into this message. This message may contain clock time announcement and/or any other message. The maximum number of message characters is 9.

3.15. COMMAND OUTPUTS

3.15.1. Setting Command Outputs (toggle)

The following eight commands toggle the state of command outputs. TOGGLE COMMAND OUTPUT 1 IS USED TO REMOTELY CONTROL THE SQUELCH ON MARK 4 REPEATERS. When the function is on, the squelch is set at threshold and when the function is off, squelch is maximum tight. The CW message ON or voice message "Device ON" is sent when the output is enabled in response to an entered command. CW message "OFF" or voice "Device OFF" is sent when the output is disabled in response to an entered command. These outputs have no time limit restrictions so they remain in the chosen state until changed.

9160 Set all command outputs off
9161 Toggle command output 1 (Squelch Adjustment)
9162 Toggle command output 2
9163 Toggle command output 3
9164 Toggle command output 4
9165 Toggle command output 5
9166 Toggle command output 6
9167 Toggle command output 7 (Message CF7 is sent on tail)

3.15.2. Program Command Function 7 Message

The following command allows information to be entered into this message to notify that the function is active. The maximum number of message characters is 9.

933 Program command function 7 message, CF7

3.16. CLOCK COMMANDS (Multifax)

3.16.1. Set Real-Time Clock

This command sets the real-time clock on the Multifax option board. The procedure for using this command is to enter the command access code followed by one DTMF digit to indicate the day of the week, two DTMF digits to indicate the time in hours (24 hour time), and finally, two digits to indicate the time in minutes. The digit entered to indicate the day of the week should be in the range from 1 (Sunday) to 7 (Saturday). Hour digits should be in the range 00 to 23, and minutes digits should be in the range 00 to 59. For example, to set the clock to correspond to Tuesday at 2:55 PM, we would first enter the access code 919, then the digit 3, which signifies the 3rd day of the week (Tuesday), then the digits 14, which indicates the time in hours on a 24 hour basis (2 PM is 1400 hours), and, finally, the digits 55 which indicates 55 minutes past the hour:

919 3 14 55

3.16.2. Message Master Voice Track Commands

Message Master contains 50 voice tracks (00 - 49) that may be recorded, played, and erased. The commands are as follows:

945 Record Voice Track
946 Erase Voice Track
947 Play Voice Track

To record, erase or play a SPECIFIC VOICE TRACK, the voice track number, 00-49, must be included in the command. The following is an example using track 02:

94502 Record Voice Track 2
94602 Erase Voice Track 2
94702 Play Voice Track 2

To record, a control operator would enter the appropriate command to record a specific voice track and immediately, without unkeying the repeater, speak the message. Record time of up to 30 seconds is available.

Continuing the example, voice track 02 may now be assigned to be used in a programmable message by adding a 0 before it:

002

3.16.3. Erase Messages

The following commands allow erasing of all user mailbox messages and/or all voice tracks:

9480 Erase all user mailboxes
9481 Erase all voice track messages

3.16.4. Parameter Set Commands

Parameter (memory) Sets allow switching between different sets of operating characteristics. First of all, we must define which operating characteristics we wish to combine in one parameter set. After we have defined the parameter sets, we can easily select, by the use of one command, which set we want operating at a particular point in time. Since the Multifax option contains a clock, we can set times for the Mark 4 to automatically switch to a different parameter set at a specific day or time of day. Five different parameter sets are provided in the Mark 4 so several styles of repeater operation may be chosen using single command entries. The following commands define, select, and set start times of parameter sets:

960 Define

(P) 9601 Define parameter set 1
(P) 9602 Define parameter set 2
(P) 9603 Define parameter set 3
(P) 9604 Define parameter set 4
(P) 9605 Define parameter set 5

915 Select

9151 Select parameter set 1
9152 Select parameter set 2
9153 Select parameter set 3
9154 Select parameter set 4
9155 Select parameter set 5
9156 Factory set parameters

920 Set Start Time (Multifax)

9201 Set parameter 1 start time
9202 Set parameter 2 start time
9203 Set parameter 3 start time
9204 Set parameter 4 start time
9205 Set parameter 5 start time

Example

As an example of how parameter sets are used, assume we wish to have the repeater operate with autopatch and autodial enabled, a transmission time-out limit of 3 minutes, and a tail with courtesy tone during the day and that we wish to have these parameters automatically switched on at 6:30 AM every day.

The FIRST STEP is to define the parameter set by setting the repeater to have all of the above characteristics:

9101 - Autopatch enabled
9121 - Autodial enabled
(P) 9523 - Transmission time-out limit = 3 minutes
(P) 9511 - Tail on
(P) 9512 - Courtesy tone on

The repeater is now operating with these characteristics.

The SECOND STEP is to enter:

(P) 9601 Define parameter set 1

Parameter set 1 now is defined to contain all the parameters (operating characteristics) currently being used.

The THIRD STEP is to instruct the Mark 4 to automatically switch to this set of parameters at 6:30 AM each morning. To do this, we enter the parameter set 1 start time command, 9201, followed by a 0 which tells the Mark 4 to do this every day, followed by 06 (6 AM), and finally 30 (30 minutes past the hour).

9201 0 06 30

Day, hours, and minutes are counted the same way as they are for setting the real-time clock. Here, however, a 0 may be used to denote that the occurrence should be every day.

To continue the example, let us change the operating style by entering 9100 - Autopatch disabled. By trying to activate the autopatch using the Autopatch Access code, 501, we can confirm that the autopatch is indeed disabled. We have now changed the parameters that the Mark 4 is currently using so they are different from the one which we defined as parameter set 1. To prove that the parameter set is working as we expect, we can either wait until 6:30 tomorrow morning when the autopatch will be enabled or we can manually reselect parameter set 1 by entering:

9151 - Select parameter set 1

Entering the Autopatch access code will now prove that the autopatch has been enabled.

The command, Select Parameter set 6, has factory set parameters which were given on page 3-2. This command will be helpful in the event that you have forgotten, for example, which parameters were defined in Parameter Set 3. You may return this set back to a know value by first entering:

9156 - Select factory set parameters

The repeater is now operating with the factory set parameters. Now enter:

(P) 9603 - Define parameter Set 3

The factory set parameters are now in Parameter Set 3.

3.17. CHANGING ACCESS CODES

The leading digits of access codes for user functions, autodial functions, extended autodial functions, and command functions may be changed at any time, if desired. When the Mark 4 is shipped from the factory, the leading digits are set as follows:

Sequential Tones	2
User Functions	5
Autodial functions	8
Extended Autodial (Group 1)	6
Extended Autodial (Group 2)	7
Command Functions	9

As shown here, the Mark 4 is set at the factory to use a single leading digit for each type of function. Up to three leading digits may be used for each type of function. For example, the system disable command access code is 900 when the Mark 4 is shipped from the factory. If we were to change the command access code leading digit from 9 to 99 (two digits instead of one), then the system disable command would become 9900. The following commands are used to change access code leading digits:

(P) 964 Change user function access codes
(P) 965 Change autodial function access codes
(P) 966 Change extended autodial group 1 access codes
(P) 967 Change extended autodial group 2 access codes
(P) 968 Change command access codes
(P) 969 Change sequential tones access codes

Access codes are changed by entering the appropriate access code above, followed by the newly desired leading digit or digits, followed by a #. For example, the procedure to change command access code leading digits from 9 to 11 is as follows:

968 11#

Now ALL command codes will begin with the digits 11. The System Enable/Disable command will be 1100.

CARE SHOULD BE TAKEN WHEN CHANGING ACCESS CODES TO INSURE THAT NO TWO TYPES OF ACCESS CODES HAVE THE SAME LEADING DIGITS. If user function access codes begin with the digit 5 then the digit 5 should not be used for command access codes, etc.

COMMAND ACCESS CODES ARE AUTOMATICALLY SET TO THE DIGIT 9 WHEN THE PASSWORD CODE IS CHANGED. This is done to allow recovery from an accidental change in command access codes. Procedure for changing the password code is in the INSTALLATION section.

3.18. COMMAND ACCESS CODE SUMMARY

(T) = Toggle (MF) = Multifax (MM) = Message Master
<X> = maximum number of message characters
(P) = must be in program mode

(321) PROGRAM MODE ENABLE/DISABLE (T)

900 SYSTEM ENABLE/DISABLE (T)

901 TESTMODE (From Local Microphone)

902 PHONE MUTING PERMISSION (T)

903 REPEATER MONITORING (From Autopatch Line)

904 NOISE SUPPRESSION (T)

905 CLEAR CONTROLLER MESSAGES (Such as PF, CP)

906 VOX OPERATION (T)

907 FORCE PROCESSOR RESET

908 PERIODIC MESSAGE INTERVAL (MF)

- 9080 Send message every 15 minutes
- 9081 Send message every 1/2 hour
- 9082 Send message every hour
- 9083 Off

909 REPEAT PERMISSIONS

- 9090 Repeat operation disabled
- 9091 Carrier access (open repeater)
- 9092 CTCSS required for repeat operation
- 9093 DTMF Wakeup
- 9094 CTCSS or DTMF Wakeup (either)

910 AUTOPATCH PERMISSIONS

- 9100 Autopatch disabled (access inhibited)
- 9101 Autopatch enabled (access permitted)
- 9102 CTCSS required for autopatch access

911 DIALING RESTRICTIONS

9110 Long distance inhibited (no 0 or 1)
9111 Long distance with 1 as first digit (8 digits maximum)
9112 Long distance permitted if CTCSS present
9113 Long distance permitted if command signal is present
9114 Long distance permitted

912 AUTODIAL OPERATION

9120 Autodial disabled
9121 Autodial enabled
9122 CTCSS required for autodial access

913 EXTENDED AUTODIAL OPERATION

9130 Extended autodial disabled
9131 Extended autodial enabled
9132 CTCSS required for extended autodial access

914 USER FUNCTION OPERATION

9140 User functions disabled
9141 User functions enabled
9142 CTCSS required for user function access

915 SELECT PARAMETER SET

9151 Parameter set 1
9152 Parameter set 2
9153 Parameter set 3
9154 Parameter set 4
9155 Parameter set 5
9156 Factory set parameters

916 SET COMMAND OUTPUTS

9160 Set command outputs off
9161 Toggle command output 1 (Squelch adjustment)
9162 Toggle command output 2
9163 Toggle command output 3
9164 Toggle command output 4
9165 Toggle command output 5
9166 Toggle command output 7 (Message sent on tail)

917 SET CW SPEED

9170 - 9179 (9170 is fastest, 9179 is slowest)

918 REVERSE AUTOPATCH OPERATION

9180 Incoming calls not answered
9181 Only command codes accepted
9182 Only commands and alert code accepted
9183 Only user function codes accepted
9184 All codes accepted

919 SET CLOCK TIME (MF)
Day (Sunday = 1 - Saturday = 7)
Time (24 hour setting)

920 SET PARAMETER START TIME (MF)

9201 Set parameter set 1 start time
9202 Set parameter set 2 start time
9203 Set parameter set 3 start time
9204 Set parameter set 4 start time
9205 Set parameter set 5 start time

921 PROGRAM ID1 MESSAGE <19>

922 PROGRAM ID2 MESSAGE <19>

923 PROGRAM ID3 MESSAGE <19>

924 PROGRAM ID4 MESSAGE <19>

925 PROGRAM ID5 MESSAGE <19>

926 PROGRAM TAIL MESSAGE 1 <9>

927 PROGRAM TAIL MESSAGE 2 <9>

928 PROGRAM TAIL MESSAGE 3 <9>

929 PROGRAM USER FUNCTION 1 MESSAGE <9>

930 PROGRAM USER FUNCTION 2 MESSAGE <9>

931 PROGRAM USER FUNCTION 3 MESSAGE <9>

932 PROGRAM USER FUNCTION 4 MESSAGE <9>

933 PROGRAM COMMAND FUNCTION 7 MESSAGE <9>

934 PROGRAM PERIODIC ANNOUNCEMENT <9> (MF)

935 PROGRAM INFORMATIONAL MESSAGE <9>

936 PROGRAM TIME-OUT MESSAGE <9>

937 PROGRAM COURTESY TONE/MESSAGE <9>

938 PROGRAM LINK 1 MESSAGE <9>

939 PROGRAM LINK 2 MESSAGE <9>

941 SELECT IDENTIFICATION MESSAGE

9411 Select ID1 message
9412 Select ID2 message
9412 Select ID3 message
9414 Select ID4 message
9415 Select ID5 message

942 PROGRAM ANALOG/DIGITAL CONVERTOR 3 MESSAGE (0 - 120) <9> (MF)

943 PROGRAM ANALOG/DIGITAL CONVERTOR 4 MESSAGE (0 - 120) <9> (MF)

944 PROGRAM ANALOG/DIGITAL CONVERTOR 5 MESSAGE (0 - 25) <9> (MF)

945 RECORD MESSAGE MASTER VOICE TRACKS (00 - 40) (MM)

946 ERASE MESSAGE MASTER VOICE TRACKS (00 - 49) (MM)

947 PLAY MESSAGE MASTER VOICE TRACKS (00 - 49) (MM)

948 ERASE VOICE TRACKS (MM)

9480 Erase all user mailbox messages
9481 Erase all voice track messages

949 SEQUENTIAL TONE ACCESS

9490 Sequential tone feature disabled
9491 Sequential tone feature enabled

951 TAIL DESCRIPTION

(P) 9510 No tail or messages
(P) 9511 Quiet 5 second tail
(P) 9512 Courtesy tone/message on/off (T)
(P) 9513 Send tail message 1
(P) 9514 Send tail message 2
(P) 9515 Send tail message 3

952 TRANSMISSION TIME-OUT LIMIT
(P) 9520 No limit

(P) 9521 1 minute
(P) 9522 2 minutes
(P) 9523 3 minutes
(P) 9524 4 minutes
(P) 9525 5 minutes
(P) 9526 6 minutes
(P) 9527 7 minutes
(P) 9528 8 minutes
(P) 9529 9 minutes

953 USER FUNCTION TIME-OUT LIMIT

(P) 9530 No limit
(P) 9531 3 minutes
(P) 9532 6 minutes
(P) 9533 9 minutes
(P) 9534 12 minutes
(P) 9535 15 minutes
(P) 9536 18 minutes
(P) 9537 21 minutes
(P) 9538 24 minutes
(P) 9539 Usage sensitive timing

954 AUTOPATCH TIME-OUT LIMIT

(P) 9540 No autopatch time-out limit
(P) 9541 1 minute
(P) 9542 2 minutes
(P) 9543 3 minutes
(P) 9544 6 minutes
(P) 9545 9 minutes
(P) 9546 12 minutes
(P) 9547 15 minutes
(P) 9548 18 minutes
(P) 9549 Usage sensitive

955 AUTODIAL/EXTENDED AUTODIAL TIME-OUT LIMIT

(P) 9550 No autodial time-out limit
(P) 9551 3 minutes
(P) 9552 6 minutes
(P) 9553 9 minutes
(P) 9554 12 minutes
(P) 9555 15 minutes
(P) 9556 18 minutes
(P) 9559 Usage sensitive

956 INVALID DIGIT ACCESS LIMIT

(P) 9560 No limit
(P) 9561 8 invalid digits allowed

(P) 9562 12 invalid digits allowed
(P) 9563 16 invalid digits allowed
(P) 9564 20 invalid digits allowed
(P) 9565 24 invalid digits allowed

957 COMMANDS ACCEPTED FROM REPEATER RECEIVER

(P) 9570 Commands accepted
(P) 9571 Commands accepted if CTCSS is present
(P) 9572 Commands not accepted

958 PHONE RING TIME

(P) 9580 Answer immediately
(P) 9581 Wait 5 seconds before answering
(P) 9582 Wait 10 seconds before answering
(P) 9583 Wait 15 seconds before answering
(P) 9584 Wait 20 seconds before answering
(P) 6858 Wait 25 seconds before answering
(P) 9586 Wait 30 seconds before answering

959 DIAL TYPE

(P) 9590 Dial pulse
(P) 9591 DTMF signaling

960 DEFINE PARAMETER SET

(P) 9601 Define Parameter Set 1
(P) 9602 Define Parameter Set 2
(P) 9603 Define Parameter Set 3
(P) 9604 Define Parameter Set 4
(P) 9605 Define Parameter Set 5

961 REVERSE AUTOPATCH ANSWERING

(P) 9610 Wait for access code. If alert code, send alert.
(P) 9611 Send alert signal as soon as answered.
(P) 9612 Connect telephone to transmitter when answered.
(P) 9613 Wait for reverse autopatch access code (505) or voice page code (600-799) then send alert or page/alert.

(P) 962 PROGRAM FIRST PRE-DIAL AUTOPATCH DIGITS

(P) 963 PROGRAM SECOND PRE-DIAL AUTOPATCH DIGITS

(P) 964 CHANGE USER FUNCTION ACCESS CODES

(P) 965 CHANGE AUTODIAL ACCESS CODES

(P) 966 CHANGE EXTENDED AUTODIAL GROUP 1 ACCESS CODES

(P) 967 CHANGE EXTENDED AUTODIAL GROUP 2 ACCESS CODES

(P) 968 CHANGE COMMAND ACCESS CODES

(P) 969 CHANGE SEQUENTIAL TONES ACCESS CODES

(P) 974 ENTER PROHIBITED TELEPHONE NUMBER 1

(P) 975 ENTER PROHIBITED TELEPHONE NUMBER 2

(P) 976 ENTER PROHIBITED TELEPHONE NUMBER 3

(P) 977 ENTER PROHIBITED TELEPHONE NUMBER 4

(P) 978 ENTER PROHIBITED TELEPHONE NUMBER 5

981 AUTO-ERASE (MM)

9810 Auto-erase enabled
9811 Auto-erase disabled

982 SET USER MESSAGE MAXIMUM RECORD TIME (MM)

		MM SPEED
(P) 9820	User message recording disabled	Inhibited
(P) 9821	8 second maximum record time	17 KHz
(P) 9822	12 second maximum record time	17 KHz
(P) 9823	16 second maximum record time	17 KHz
(P) 9824	20 second maximum record time	17 KHz
(P) 9825	9 second maximum record time	24 KHz
(P) 9826	12 second maximum record time	24 KHz
(P) 9287	15 second maximum record time	24 KHz
(P) 9828	8 second maximum record time	32 KHz
(P) 9829	16 second maximum record time	32 KHz

4. USER FUNCTIONS AND ACCESS CODES

4.1. GENERAL COMMENTS

Mark 4 capabilities which may be accessed by all repeater users are called User Functions. Any user functions that are provided by Multifax or Message Master option will be so designated by MF or MM respectively. Normally, user function access codes are entered from the repeater receiver or link receiver except for the Reverse Autopatch Alert access code which is entered from the telephone line. It is, however, possible to enter user function access codes from input sources normally used for commands such as a command receiver. The operation of user functions and the means of accessing them is determined by commands entered by control operators. It is recommended that the DTMF level on the tone pads be adjusted to produce a transmitter deviation not exceeding 3.5 KHz.

4.2. FIXED MESSAGES

The first 5 of the following fixed messages will be heard by users when accessing any of the functions described in this section:

CW MESSAGE	VOICE MESSAGE	MEANING
RRR	Thank You	A Valid access code has been received and executed.
CLR	Clear	A Clear Code has been received and executed. An autodial code has been entered and no number has been programmed into it.
OFF	Device OFF	The selected function has been inhibited.
OK	OK	Sent in response to tone pad test access codes to indicate that the tone row/column is functioning properly.
BZ	Busy	Sent when an attempt is made to access a telephone line which is being shared among several Mark 4 repeaters.
PF	Power Fail	Informs users that power failure has occurred. Power has been restored.
EP	Power Switch	Informs users that operation is now from emergency power source.
CP	Line Power	Informs users that commercial power has been restored.

4.3. TELEPHONE INTERCONNECT

4.3.1. Autopatch Clear #51

This access code clears or terminates all telephone interconnect functions: autopatch, autodial/extended autodial, and reverse autopatch.

4.3.2. # Phone Muting

This function, when entered during an autopatch call, will prevent receiver audio from being re-transmitted to give a degree of privacy to autopatch calls.

4.3.3. Autopatch Activate (Primary Autopatch)

When a user wishes to place a telephone call via the primary autopatch, we must first enter this access code followed by the number he wishes to call. The telephone number must be entered within 20 seconds or the call will be terminated.

For example, to dial 555-1234, the user would enter:

501 555 1234

4.3.4. Secondary Pre-Dial Autopatch Activate

4.3.5. Tertiary Pre-Dial Autopatch Activate

These two autopatch functions have pre-programmed into them a portion of frequently called numbers, most likely an area code and/or telephone exchange. To use these functions, the user would first enter either access code followed by the remainder of the number he/she wishes to call.

For example, a user wishes to call 555-1234. The digits 555 have been pre-programmed to be included when the secondary pre-dial autopatch, 502, is activated. All that user has to enter to place his call to 555-1234 will be:

502 1234

4.3.6. Redial

This function activates the autopatch and automatically dials the last telephone number called.

4.3.7. Autodial/Extended Autodial Procedure

Emergency telephone numbers or individual user telephone numbers have been programmed into a 3 digit code. All that the user needs to do to call one of the emergency services or his/her own telephone number is to enter the assigned 3 digit code and the dialing will begin.

4.3.8. Reverse Autopatch

Reverse autopatch gives access to the repeater from the telephone network by answering incoming calls on the autopatch telephone line for the purpose of contacting other repeater users or for activating functions. To contact another repeater user, he use the Reverse Autopatch Alert access code described below. To activate functions, the user must first dial the repeater phone, wait for the tone burst, and then enter the desired function access code.

4.3.9. Reverse Autopatch Alert

When placing a call via the repeater telephone, the repeater phone number must first be dialed. After the Mark 4 answers, the user must enter the reverse autopatch alert access code, 505, if he wishes to contact another repeater user. The repeater will send out an alert signal. This will inform a listener that a call has been placed and he should enter the autopatch activate code, 501, to complete the connection.

4.4. OTHER USER FUNCTIONS

4.4.1. User Function Clear #50

The code is used to clear all user functions with an access code of 520 or higher. Clear codes are not used with User mailboxes.

4.4.2. * Unmute/Buffer Clear

This code will disable phone muting that was enabled by the "#". In addition, this code erases the access code buffer in the event that an error was made when entering an access code.

4.4.3. ** Ignore Access

Normally DTMF tones are muted (not re-transmitted). This code causes the tones to be unmutes so the Mark 4 will ignore the DTMF digits following the **. They may now be re-transmitted to control equipment not associated with the Mark 4. For example, **125 would pass transparently through the repeater.

4.4.4. Timer Reset Or Wakeup

This code will reset the transmission time-out timer in the event that a user has caused a time-out. When the repeater is operating in the Wakeup mode of access, this code will awaken the repeater for normal communications. Other functions may be activated without first entering the Wakeup code. For example, the autopatch may be activated by entering just the autopatch activate code.

4.4.5. Sleep

This code will put the repeater to sleep when it is operating in the Wakeup mode and has been awakened. When this code is entered, the transmitter operation will cease and no tail is sent.

4.4.6. Play Information (Bulletin) Message

This code will allow repeater listeners to access pre-programmed information.

4.4.7. Clock Time Announcement (MF)

By entering this code, users may obtain a readout of clock time in a female voice. User function 509 gives a greeting followed by the time in a female voice. For example: "Good morning, the time is 8:05am."

4.4.8. Analog To Digital Converter Readouts (MF)

510 Gives value of analog to digital convertor 1
511 Gives value of analog to digital convertor 2
512 Gives value of analog to digital convertor 3
513 Gives value of analog to digital convertor 4
514 Gives value of analog to digital convertor 5

The above functions may be used to obtain a remote reading of voltage, current, temperature, or any other external analog sensors. For example, entering 512 might produce a tail message of "Repeater power in watts 85". The message "Repeater power in watts" is the message programmed by the control operator and 85 is the scaled reading of analog/digital convertor 3.

4.4.9. Pulse Outputs

Two types of pulse outputs are available for controlling external equipment either by themselves or in combination with other user function outputs. One of the pulse outputs is activated by entering a * (single DTMF entry) and causes a pulse to be output for the entire time which the * is present.

Any user function output may also be pulsed by entering the user function access code followed by the digit 1. For example, to generate a pulse on user function output 7, enter the user function access code 525 followed by the digit 1, that is, 5251. This will cause a fixed length of pulse in a similar manner by entering the access code followed by the digit 1. When user function access codes are entered in this manner to cause pulses, it is not necessary to enter a clear code to release the function.

Since pulsing causes the function outputs to be turned on and then off, the pulse access codes may also be used to clear individual user function outputs. For example, assume that both user functions 3 and 6 have been activated by sequentially entering access codes 523 and 526. Now assume we wish to clear function output 6 while keeping function output 3 active. We can achieve this result by entering the pulse access code for function 6, 5261. This will try to send a pulse on function output 6 but since the function is already turned on, the pulse will not be noticed. However, at the end of the pulse period, function output 6 will be turned off to end the pulse and will remain off.

4.4.10. Serial Output

Certain external equipment is more easily controlled with sequential pulses rather than single output pulses. For example, some digital transceivers can be controlled by accumulating pulse streams in a shift register or counter. The exact control nature varies with the type of transceiver, but the generalized format of the Mark 4 serial output can be a powerful means to perform control of this type.

The serial output function is activated by entering access code 515. This causes user function output 11 to be activated. Any digits entered following the access code are outputted as pulses on user function 12 output. For example, if access code 5153 is entered, then user function 11 is activated and three pulses occur on the user function 12 output. If the digit 7 is then entered, an additional seven pulses will be outputted on user function output 12. User function output 11 stays active until cleared.

4.4.11. Echo Function (Mm)

The Echo function allows repeater users to record and playback a sample of their own speech as a means to check their audio quality. The function is used by entering access code 516 and immediately speaking any message (do not remove carrier after entering the access code). A spoken message up to 30 seconds in duration may be stored. At the end of the transmission, the Mark 4 will indicate that it has stored the message by sending a short tone burst. To play the message, briefly key the repeater and the message will be echoed on the repeater tail. Test messages recorded using the Echo function are automatically erased after being played.

4.4.12. Readout Of Received Signal Deviation, Signal Strength, And Frequency Offset (MF)

This function allows repeater users to get a readout of their signal as heard by the repeater. The readout is only given when accessed from the repeater receiver. The function will stay active until it is cleared. To obtain the readout, first enter the access code, 520, and release the PTT button. A readout will be heard but should be disregarded. Next, key the repeater and speak for a MINIMUM OF 5 SECONDS. Release the PTT button and the repeater will respond with a readout of your signal. The readout will occur on the tail of the transmission. The deviation reading will be the peak deviation which occurs during the first five seconds of the transmission.

Signal report messages are of the form: "Check four point five kilohertz, S nine, frequency one kilohertz low." This readout means that the peak deviation during the first five seconds of transmission was 4.5 kilohertz, the signal is very strong (readouts range from S1 to over S9) and the received signal was 1 kilohertz off frequency.

Several users may check their deviation, strength, and frequency while the function is still active. In this case, the access code, 520, need not be entered for each readout.

4.4.13. User Function Outputs

Twelve independent logic outputs are provided which may be individually activated by user function access codes for controlling external equipment, such as directional antennas.

521 User Function 1 Output Activate
522 User Function 2 Output Activate
523 User Function 3 Output Activate
524 User Function 4 Output Activate
525 User Function 5 Output Activate
526 User Function 6 Output Activate
527 User Function 7 Output Activate
528 User Function 8 Output Activate
529 User Function 9 Output Activate
530 User Function 10 Output Activate
531 User Function 11 Output Activate
532 User Function 12 Output Activate

Any individual output can be turned off by entering the function number followed by 1. For example, clear User Function 1: 5211

4.4.14. Link Functions

533 Link Function 1 Activate
534 Link Function 2 Activate

User functions are provided for linking to equipment on other frequencies. When either of these functions are active, a message designated LK1 or LK2 is sent on the repeater tail. Cross-connections between links can be done through these messages if a control operator has programmed it to do so. When the link is active, other functions may be activated.

4.4.15. Tone Pad Tests

Once the function has been activated by entering the access code, 535, seven tests to check DTMF levels may be used individually or in combination to test all rows and columns (not including column 4) of the tone pad. A single faulty digit can be found with this test. The 7 access codes are as follows:

123, 456, 789, #0*, 147, 258, 369

THE FIRST 3 ACCESS CODES ARE ENTERED FROM LEFT TO RIGHT WHILE THE 4TH IS ENTERED FROM RIGHT TO LEFT.

The test is done by entering any one of the access codes, for example 456, and then pausing to listen for the repeater tail. If the access code is accepted, the message "OK" in CW or voice will be sent and the next row or column many be checked. Additional test flexibility is possible with the row 4 test because the "OK" message is sent in response to any entry of #0 followed by any other single DTMF digit (e.g. #05). This may be useful in certain applications.

4.4.16. BCD Control Output

This feature enables the Mark 4 to load external shift registers so the shift registers can be used to control other equipment in BCD format. The Mark 4 provides both data and clock pulses to the shift registers so no other circuitry is needed to obtain a BCD output format.

This feature is activated by entering User Function access code 536 followed by the BCD digits which are to be outputted followed by the character.

For example, if it is desired to output the digits 2 and 4 in BCD format then the following access code would be entered:

5 3 6 2 4 *

This example uses to BCD digits (2 and 4). The feature may be used with any number of BCD digits to a maximum of ten digits.

Data pulses from the Mark 4 are output on rear panel terminal 29 (UF11) and clock pulses are output on rear panel terminal 30 (UF12). Pulses are output at a high data rate so short leads should be used to connect from the Mark 4 to the external shift registers.

Pulses are output in a format which can directly load a 74LS164, or equivalent, shift register. Pullup resistors (4.7 Kohms to +5 volts) should be used on TB29 and TB30. Shift register pins 1, 9 and 14 should be connected directly to +5 volts and pin 7 should be connected to ground. BCD output digits are available on the shift register pins as follows:

First Digit on Pins				**Second Digit on Pins**			
MSB			LSB	MSB			LSB
10	11	12	13	3	4	5	6

Each shift register has outputs for two BCD digits. If more than two BCD digits are to be used then shift registers may be cascaded. For example, if four BCD digits are desired then two shift registers are used, and the digits are created by entering an access code of the form:

5 3 6 1 2 3 4 *

Where BCD digits 1 and 2 would be contained in the first shift register and digits 3 and 4 would be contained in the second shift registers.

4.4.17. BCD Serial Output Function

User Access Code: **536** followed by up to four digits. That is, user may enter: **536WXYZ** where w, x, y and z, represent digits in the range zero to nine. For example, if user enters 5361234 then w = 1, x = 2, y = 3, and z = 4.

Function outputs clock and serial data on rear panel terminal strip:

TB29 = data **TB30 = clock**

Data output in a 4-bit BCD code for each access code suffix digit. Data is valid on the rising edge of the clock. Data is sent with LSB first. For example, output signals for suffix value Y=3 are as follows:

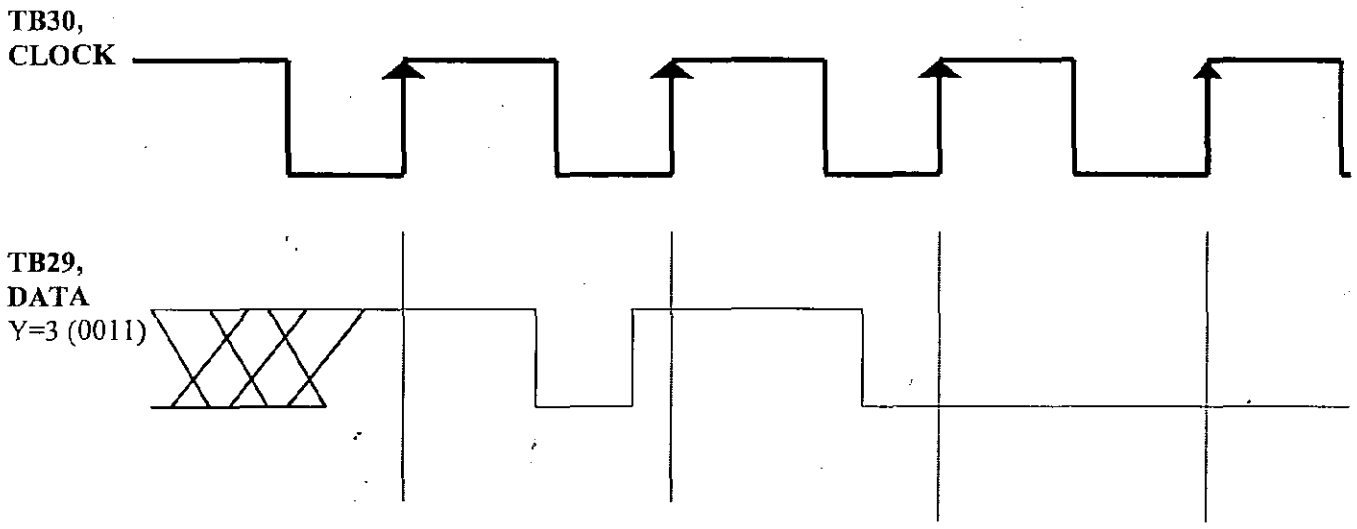

Circuitry for converting four BCD digits to parallel format

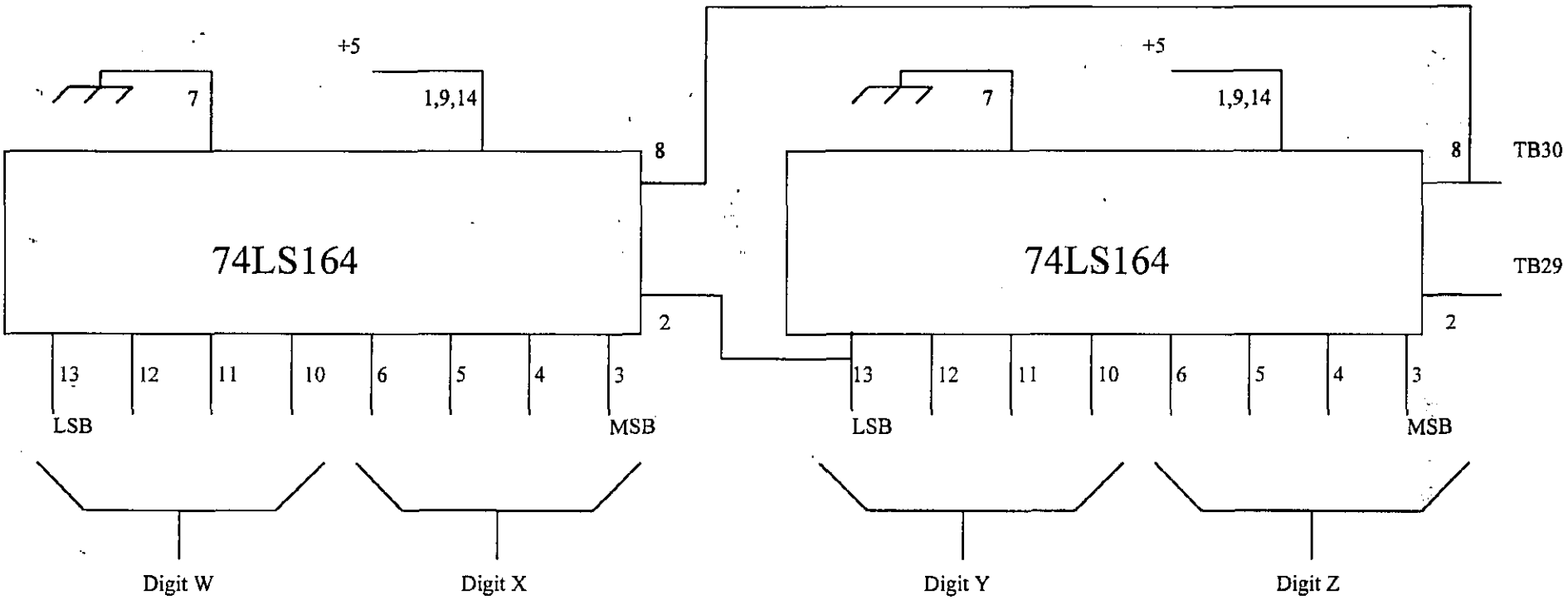

4.4.18. User Mailboxes (MM)

The extended autodial access code that has been assigned to a user will also be used to activate the Mailbox capability of the Message Master when followed by a suffix digit in the range 1 through 3. For example, the access codes used by the repeater user who is assigned access code 600 would be:

600 Activate extended autodial
6001 Play mailbox message
6002 Record a mailbox message
6003 Erase a mailbox message

Assume that user 600 is a friend of mine. He has told me that he is assigned access code 600. I know that he is at work and not listening to the repeater at the present time but I have a message I wish to deliver to him. Thus, I wish to record a mailbox message for user 600. To do this, I would simply enter his record access code, 6002, and speak the message. (Speak the message immediately after entering the access code. Do not unkey the repeater until the entire message is spoken.) My message would be recorded by the Message Master. When I finish speaking the message, the Mark 4 will indicate that it has successfully recorded the message
by sending a short tone burst.

Sometime later when user 600 leaves work, he can ask Message Master whether any messages have been recorded in his mailbox by entering his playback access code 6001. If any messages have been recorded, they will be played. If no messages have been recorded, the Mark 4 will send a short tone burst to indicate that it has no messages for him.

After user 600 has listened to his messages, he may erase them by entering his erase code, 6003.

In order to save memory in the Message Master for everyone, courtesy demands that a user make his messages as short as possible and that he erase his messages after he has listened to them.

4.4.19. Voice Message Lists

This feature allows callsigns to be announced for all repeater users for whom Message Master messages have been recorded. Any repeater user may cause the callsigns to be sent on the repeater tail by entering the access code 517.

For example, if a Message Master message had been recorded for repeater user 600 (by entering the access code 6002 and speaking the message) and a repeater user then entered the access code 517, the Mark 4 would send "Message for W1XYZ."

For callsigns to be announced using this feature, the callsigns must be programmed into the Mark 4 using the "Enter ID" mode as described above.

The callsign list may also be sent as part of other messages if desired. For example, the callsign list may be included in the Periodic Announcement Message. To include the callsign list in the periodic message, a control operator would enter the access code:

934 098 000 #

where,

934 is the command to program the periodic message,
098 000 tells the Mark 4 to send the callsign list as part of the message, and
# indicates that all information has been entered.

The characters 098 000 when included in the text of a message tell the Mark 4 to send the callsign list. Thus, the callsign list can be sent in any programmable message such as an ID or Tail Message.

Callsign lists may also be included in messages by using 098 001 (rather than 098 000). For example, the periodic message could be programmed to give the callsign list by entering the command:

934 098 001 #

When 098 001 is used rather than 098 000, the message "NO MESSAGES" will be sent when there are no messages for users.

4.5. SEQUENTIAL TONES

Individual and group call two-tone sequential paging signals can be generated by the Mark 4 in response to DTMF access codes. Access codes in the range 200 to 299 originate individual unit paging signals, and access codes in the range 20# to 29# originate in group call paging signals. Paging signals are sent on the repeater tail after an access code is entered by a repeater user.

Motorola Group 2 tones are the standard tone frequencies furnished in the Mark 4. Tone frequencies corresponding to DTMF digits entered are as follows:

DTMF Digit Entered	Tone Frequency in Hz	Motorola Reed Number
0	569.1	120
1	600.9	121
2	634.5	122
3	669.9	123
4	707.3	124
5	746.8	125
6	788.5	126
7	832.5	127
8	879.0	128
9	928.1	129

To send an individual unit paging tone select DTMF digits from the above list which correspond to the tone frequencies to be sent. Enter the sequential tone access code leading digit (factory programmed as the digit 2) followed by the DTMF digits corresponding to the paging tone frequencies.

EXAMPLE: To send an individual unit page consisting of tone frequency 569.1 Hz followed by 832.5 Hz enter access code: 207

Where,

2 is the leading digit for sequential tone functions
0 is the DTMF digit corresponding to 569.1 Hz
7 is the DTMF digit corresponding to 832.5 Hz

Individual unit pages are sent with the first tone having a duration of one second and the second digit having a duration of three seconds.

To send a group call or all-call paging tone, select desired tone frequency from the above list. Enter the sequential tone access code leading digit (factory programmed as the digit 2) followed by the DTMF digit corresponding to the tone frequency to be sent followed by the # character.

EXAMPLE: To send a group call paging tone of 669.9 Hz enter the access code: 23#

Where,

2 is the leading digit for sequential tone functions
3 is the DTMF digit corresponding to 669.9 Hz

# indicates group call page.

Group call and all-call pages consist of a single tone having a duration of 8 seconds.

9490 Sequential tone feature disabled
9491 Sequential tone feature enabled

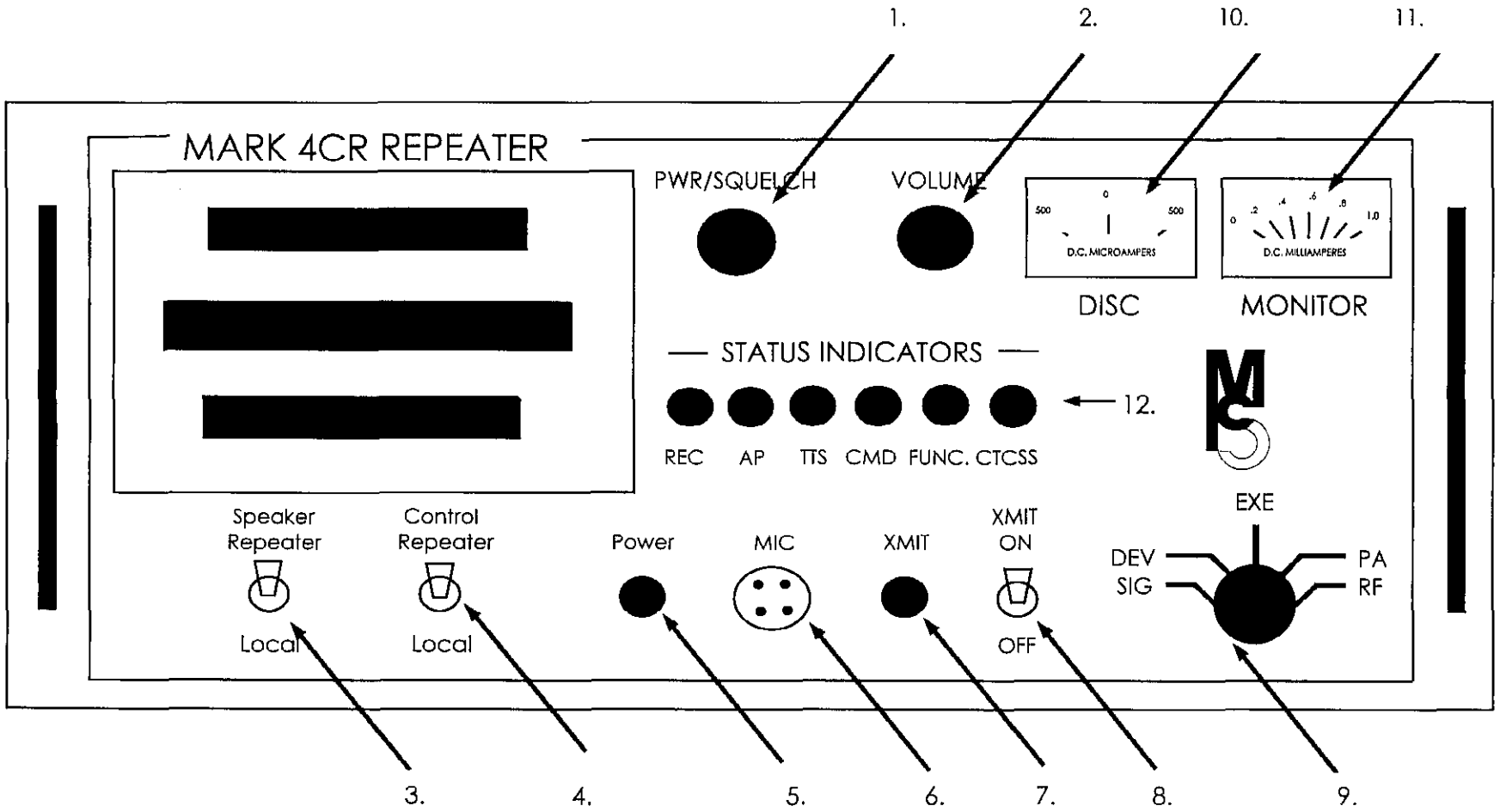

FIGURE 1: FRONT PANEL

4.6. USER FUNCTION ACCESS CODE SUMMARY

PHONE MUTING

* UNMUTE/BUFFER CLEAR

** IGNORE ACCESS

#50 USER FUNCTION CLEAR (ACCESS CODES 520 OR HIGHER)

#51 AUTOPATCH CLEAR

500 TIMER RESET/WAKEUP

501 AUTOPATCH ACTIVATE

502 SECONDARY PRE-DIAL AUTOPATCH ACTIVATE

503 TERTIARY PRE-DIAL AUTOPATCH ACTIVATE

504 REDIAL

505 REVERSE AUTOPATCH ALERT

506 SLEEP

508 PLAY INFORMATIONAL (BULLETIN) MESSAGE

509 CLOCK TIME ANNOUNCEMENT (MF)

510 GIVES VALUE OF ANALOG TO DIGITAL CONVERTOR 1 (MF)

511 GIVES VALUE OF ANALOG TO DIGITAL CONVERTOR 2 (MF)

512 GIVES VALUE OF ANALOG TO DIGITAL CONVERTOR 3 (MF)

513 GIVES VALUE OF ANALOG TO DIGITAL CONVERTOR 4 (MF)

514 GIVES VALUE OF ANALOG TO DIGITAL CONVERTOR 5 (MF)

515 SERIAL PULSE OUTPUT

516 ECHO FUNCTION (MM)

520 READOUT OF RECEIVED SIGNAL DEVIATION, SIGNAL STRENGTH, AND FREQUENCY OFFSET (MF)

521 USER FUNCTION 1 OUTPUT ACTIVATE

522 USER FUNCTION 2 OUTPUT ACTIVATE

523 USER FUNCTION 3 OUTPUT ACTIVATE

524 USER FUNCTION 4 OUTPUT ACTIVATE

525 USER FUNCTION 5 OUTPUT ACTIVATE

526 USER FUNCTION 6 OUTPUT ACTIVATE

527 USER FUNCTION 7 OUTPUT ACTIVATE

528 USER FUNCTION 8 OUTPUT ACTIVATE

529 USER FUNCTION 9 OUTPUT ACTIVATE

530 USER FUNCTION 10 OUTPUT ACTIVATE

531 USER FUNCTION 11 OUTPUT ACTIVATE

532 USER FUNCTION 12 OUTPUT ACTIVATE

533 LINK 1 FUNCTION ACTIVATE

534 LINK 2 FUNCTION ACTIVATE

535 TONEPAD TEST FUNCTION ACTIVATE

5. FRONT PANEL

5.1. FRONT PANEL

5.1.1. Mark 4 Repeater Front Panel

The Mark 4 repeater front panel includes the following controls and indicators:

1. **Power/Squelch** - Controls AC power input (on/off) to the repeater and sets the receiver squelch threshold. Does not control DC power input to the repeater so repeaters operating from DC power only, and repeaters using automatic transfer to emergency DC power sources will continue to operate even when the AC power source is switched off.

2. **Volume** - Controls local front panel speaker volume. Does not affect re-transmitted audio level. When leaving the repeater unattended, it is good practice to set the speaker volume to minimum (fully counter-clockwise) as a courtesy to other users of the repeater site.

3. **Speaker Switch** - Allows the front panel speaker to monitor receiver output audio (with the switch in the local <down> position), or transmitter input audio (with the switch in the repeater <up> position). In the repeater position, the speaker monitors telephone line audio and messages generated by the Mark 4 as well as re-transmitted audio from the repeater receiver.

4. **Control Switch** - The repeater <up> position of this switch allows normal repeater operation. In the local <down> position, the receiver signal present (COS) output is disabled so the Mark 4 will not respond to received signals. The local position allows the Mark 4 to be operated from the local microphone as a remote base station. Control inputs, such as XHLD, are not disabled when operating in the local position so this position may also be used when performing tests at the repeater site.

5. **Power Lamp** - This lamp indicates that AC power is applied to the Mark 4. The lamp does not indicate whether DC power is applied to the unit.

6. **Microphone Jack** - This 4-pin jack accepts audio, push-to-talk control, and DTMF tone inputs from the local microphone. Jack pin assignments are shown on the wiring drawings in the Appendix.

7. **Transmit Lamp** - This lamp indicates that the transmitter is active

8. **Transmit Switch** – This switch disables

9. **Meter Switch** - This switch selects the measurement value to be displayed by the multi-function meter.

10. **Discriminator Meter** - Indicates the frequency offset error of received signals. The meter is a zero-center meter so on-frequency received signals will cause the meter to display a center scale reading. The meter will indicate left of center for signals which are low in frequency,

and right of center for signals which are high in frequency. Meter calibration information is given in the Receiver section of this manual.

11. **Multi-Function Meter** - This meter can display received signal strength, received signal peak deviation, transmitter exciter current, transmitter power amplifier current, and transmitter relative power output. The meter display is controlled by the Meter Switch. Meter calibration information is given in the Receiver and Transmitter sections of this manual.

12. **Status Lamps** - Six status lamps provide the following indications:

1 - Received signal present
2 - Autopatch telephone interface active
3 - DTMF tone present
4 - Command signal present
5 - Any user function output active
6 - CTCSS tone present

5.1.2. Mark 4C Controller Front Panel

The Mark 4C controller front panel includes the following controls and indicators:

1. **Power Switch** - Switches AC power to the controller. Does not control DC power to the unit so controllers operating from DC power only, and controllers operating with automatic transfer to emergency DC power sources, will continue to operate when AC power is switched off.

2. **Volume** - Controls the local speaker audio level. Does not affect re-transmitted audio level.

3. **Power Lamp** - Indicates that AC power is applied to the unit. Does not indicate whether DC power is applied to the controller.

4. **Transmit Lamp** - Indicates that the transmitter is on.

5. **Microphone Jack** - This 4-pin jack accepts audio, push-to-talk control, and DTMF tones from the local microphone. Jack pin assignments are shown on the wiring drawings in the Appendix.

6. **Status Lamps** - Six status lamps provide the following indications:
   1 - Received signal present
   2 - Autopatch telephone interface active
   3 - DTMF tone present
   4 - Command signal present
   5 - Any user function output active
   6 - CTCSS tone present

5.2. REAR PANEL

The Mark 4 rear panel contains the following:

4 15-terminal barrier strips (terminals TB1 to TB60)
9 RCA type audio jacks
3 Ampere AC power fuse
5 Ampere DC power fuse (5 A on Mark 4C Controller)
Coaxial transmitter output jack (Mark 4 repeater only)
Coaxial receiver input jack (Mark 4 repeater only)

5.2.1. TERMINAL DESIGNATIONS

TB1	Ground
TB2	AD1
TB3	AD2
TB4	AD3
TB5	AD4
TB6	AD5
TB7	PULS
TB8	EXTID
TB9	CF1-(Remote squelch adj.
TB10	CF2 Mark 4 rpt. only)
TB11	CF3
TB12	CF4
TB13	CF5
TB14	CF6
TB15	CF7
TB16	Ground
TB17	AB
TB18	BZ
TB19	UF1
TB20	UF2
TB21	UF3
TB22	UF4
TB23	UF5
TB24	UF6
TB25	UF7
TB26	UF8
TB27	UF9
TB28	UF10
TB29	UF11
TB30	UF12
TB31	Ground
TB32-TB39	RV option
TB40	COS
TB41	SEQT
TB42	COSL
TB43	XHLD
TB44	CMD
TB45	VOX
TB46	Ground
TB47	+5V pullup
TB48	Limiter
TB49	Discriminator
TB50	Deviation
TB51	K3 relay
TB52	K2 relay
TB53	K1 relay
TB54	PTT
TB55	+5V pullup
TB56	no connection
TB57	Phone line
TB58	Phone line
TB59	Command Phone
TB60	Command Phone

5.2.2. Audio Jacks

Audio input/output connections are made through RCA-style rear panel mounted jacks. Because audio connections may be low in level and high in impedance, it is suggested that shielded cable be used for all audio connections.

5.2.3. JA1 (RX2)

A secondary repeater receiver may be connected to this input. If this input is used, the secondary receiver audio will be directly mixed with the primary receiver audio. Access codes will be accepted from the secondary receiver only if a received-signal-present (COS) signal from the secondary receiver is connected to rear panel terminal TB40 in the same manner as the primary repeater receiver. The audio level applied to this input should be adjusted to 0.5 volts peak-peak. No internal level adjustment is provided.

5.2.4. JA2 (CMD IN)

Audio from an external command receiver may be applied to this input. The applied audio level should be adjusted to 0.5 volts peak-peak (no internal level adjustment is provided). For access codes to be accepted from this input, a received-signal-present (COS) output from the command receiver must be connected to rear panel terminal TB44. Audio applied to this input is routed only to the DTMF decoder and not to the repeater transmitter.

5.2.5. JA3 (LINK IN)

Audio from a link receiver may be applied to this input. The applied audio level should be nominally 0.5 to 1.0 volts peak-peak and may be precisely adjusted using potentiometer R116 on the audio circuit board.

5.2.6. JA4 (LINK OUT)

This output may be used to drive a link transmitter. The audio output level is nominally 1 volt peak-peak.

5.2.7. JA5

This spare audio input may be used to connect external audio sources to the repeater transmitter. Audio applied to this input should be externally adjusted to a nominal level of 1 volt peak-peak.

5.2.8. JA6

Transmitter audio is available at this output. In Mark 4 repeaters, the use of this output is optional; in Mark 4C controllers, this output provides audio drive for the external repeater transmitter. The audio level available at this output is adjusted by potentiometer R88 on the audio circuit board to a level of 1 volt peak-peak.

5.2.9. JA7

This spare audio input may be used to connect external audio sources to the repeater transmitter. Audio applied to this input should be externally adjusted to a nominal level of 1 volt peak-peak..

5.2.10. JA8

In Mark 4 repeaters without the Receiver Voting option, this output may be used to monitor repeater receiver audio. In Mark 4 repeater with the Receiver Voting option, this output may be used to monitor voted receiver audio. In Mark 4C controllers, this jack is an input and audio from the external primary repeater receiver should be applied to this input at a nominal level of 1 volt peak-peak. Potentiometer R22 on the backplane circuit board may be used to compensate for variations in receiver output from this nominal level.

5.2.11. Terminal Descriptions

Unless otherwise specified, all outputs are driven by active low, open collector gates capable of withstanding +25VDC in the off condition and capable of sinking 25mA in the on condition. Active low means that when the output is selected, it will draw current (to a maximum of 25mA) and pull the load voltage to ground (to less than 0.5 volts). Open collector means that the output is in a high impedance condition when the output is not selected. This is an especially flexible arrangement because it permits "wired-or" control so manual switches or other electronic circuitry may be connected directly in parallel with Mark 4 outputs if desired. A pullup resistor should be included in the controlled equipment to guarantee turn off. If the controlled equipment requires high power control (greater than 25 volts, 25mA) then an external relay should be used. Figure 2 on Page ____ illustrates circuitry for driving a high power external load from a Mark 4 function output.

Unless otherwise specified, all logic inputs are high impedance (4700 Ohm) and should be driven from TTL compatible logic levels (logic 1 = 3.5V minimum, 5.5V maximum; logic 0 = 0V minimum, 0.8V maximum). Damage may result if inputs are driven greater than +5 volts or less than 0 volts.

To minimize noise pickup and radiation it is recommended that twisted pair wiring, consisting of signal and ground wires, be used for all connections to rear panel terminals (except telephone connections). A ground terminal is provided on each of the rear panel terminal strips for this purpose. Telephone line connections are balanced circuits and do not need a ground connection.

5.2.12. TB2-TB6 (AD1-AD5)

These inputs allow five independent analog voltages in the range 0 to 5 volts to be measured by the Mark 4 and reported by voice messages. Applying voltages outside this range may cause permanent damage. These inputs are available only when the MF option is installed.

5.2.13. TB7 (PULS)

This active low output is energized whenever a DTMF * tone is entered. The output remains low as long as the * is present.

5.2.14. TB8 (EXTID)

This active high output presents a momentary pulse (>100 usec) whenever callsign identification is required if the Mark 4 has been commanded to use external identification.

5.2.15. TB9 - TB5 (CF1-CF7)

Active low command function outputs. On Mark 4 repeaters, TB9 (CF1) is pre-wired to allow remote control of repeater squelch. When CF1 is OFF, the squelch is held in the full tight condition and the front panel squelch control has no effect. When CF1 is ON, the squelch setting is controlled by the front panel squelch control.

5.2.16. TB17 (AB)

A low (ground) logic level applied to this input signals the Mark 4 that the autopatch phone line is already in use and not available for initiating a telephone call. Several Mark 4 repeaters may share a single autopatch phone line if terminals TB17 and TB18 on all repeaters are connected together. If connections are made in this manner, then repeater users will be given a line-busy message if they attempt to initiate a call when the phone line is already being used by another repeater.

5.2.17. TB18 (BZ)

This output is pulled to ground whenever the autopatch telephone line is in use. The output may be used to allow several Mark 4 repeaters to share a single autopatch phone line (see TB17 description).

5.2.18. TB19 - TB30 (UF1-UF12)

Active low user function outputs. Each output is driven by an open-collector driver which is normally OFF (open collector) and is turned ON (pulled to ground when the associated access code is entered. The output buffers can withstand 24 VDC in the OFF condition and can sink 25mA in the ON condition.

5.2.19. TB32 - TB39

These terminals are used with the Receiver Voting option.

5.2.20. TB40 (COS)

In Mark 4 repeaters, this terminal may be used as an output for monitoring receiver activity. It is a low power active high output capable of driving one equivalent TTL load. The output is driven high whenever a received signal opens the receiver squelch.

In Mark 4C controllers, this terminal is an input. An active high TTL compatible signal indicating the presence of received signal should be connected from the repeater receiver to this input. If the repeater receiver provides only an active low COS output, then jumper E1 on the Mark 4 processor circuit board should be moved so that it connects from terminal E1 to the adjacent +5 volt terminal.

5.2.21. TB41 (SEQT)

On units equipped to generate two-tone sequential paging signals, the sequential audio tones are available at this output. Connections to transmitter audio circuits are made within the Mark 4 so this output is intended primarily for monitoring. It may also be used to drive external high impedance circuitry.

5.2.22. TB42 (COSL)

An active high TTL compatible signal may be applied to this input from an external link receiver to indicate the presence of received signal on a linked system connected to the Mark 4. If the link receiver provides only an active low COS output then jumper E2 on the Mark 4 processor circuit board should be moved so that it connects from terminal E2 to the adjacent +5 volt terminal.

5.2.23. TB43 (XHLD)

Any external equipment needing to keep the repeater transmitter active, may do so by applying a ground (logic zero) to this input. The repeater transmitter will remain active as long as this input is held low; therefore, external equipment which operates independently from the Mark 4 should be equipped with its own time limit circuitry to insure that the transmitter is deactivated (by removing the ground from this input).

External equipment which is controlled by Mark 4 function outputs may rely on Mark 4 function time limits to deactivate the transmitter if connections are made to this input through isolating diodes from Mark 4 function outputs. As an example, figure 3 shows the connections which would be used to hold the repeater transmitter active whenever user function outputs 5 or 7 are active. The two user function outputs control separate external equipment, but both function outputs are connected through isolating diodes to TB43 so the transmitter will be held active when either user function is active.

With this arrangement, Mark 4 function time limits determine how long the repeater transmitter will remain active so no external timer is necessary. Any number of user or command function outputs may be connected in this manner.

5.2.24. TB44 (CMD)

An active high TTL compatible signal indicating the presence of signal from a command receiver may be applied to this input to cause the Mark 4 to accept DTMF commands from the command receiver. The input signal may be obtained from the command receiver squelch circuit (COS) or from a CTCSS decoder connected to the command receiver. If the command receiver provides only an active low signal to indicate the presence of received signal, the jumper E3 on the Mark 4 processor circuit board should be moved to connect from terminal E3 to the adjacent +5 volt terminal.

5.2.25. TB45 (VOX)

In applications using voice control, this terminal may be used as either an input or an output. Circuitry with the Mark 4 causes the terminal to be pulled to ground (logic zero) whenever modulation exists on a signal present at the repeater receiver. The presence of received signal modulation may be monitored by using this terminal as an output. Applications using tone burst operation may apply a ground to this terminal to indicate to the Mark 4 that a tone burst has been received.

5.2.26. TB48 (Received Signal Strength)

In Mark 4 repeaters this high impedance output delivers an analog voltage in the range 0 to 5 volts which is proportional to received signal strength. In Mark 4C controllers equipped with the MF option, a voltage in the range 0 to +5 volts may be applied to this terminal. The Mark 4C will translate the applied voltage to a signal strength value for remote readout.

5.2.27. TB49 (Receiver Discriminator)

In Mark 4 repeaters, this high impedance output delivers an analog voltage which is proportional to received signal frequency error. A voltage of approximately +1 volt corresponds to an on frequency signal. In Mark 4C controllers equipped with the MF option, a voltage in the range 0 to +2 volts may be applied to this terminal. The Mark 4C will translate this applied voltage to a frequency offset value for remote readout.

5.2.28. TB50 (Received Signal Deviation)

In Mark 4 repeaters this high impedance output delivers an analog voltage which is proportional to received signal peak deviation. In Mark 4C controllers equipped with the MF option an analog voltage in the range 0 to +5 volts may be applied to this terminal. The Mark 4C will translate the applied voltage to a peak deviation value for remote readout.

5.2.29. TB51 (K3 Relay)

An optional relay, K3, may be provided for external equipment needing high power control. Custom connections are used when K3 is provided to meet special customer needs for specific applications. If K3 is not provided, then no connection is made to this terminal.

5.2.30. TB52 (K2 Relay)

This output provides for control of an external link transmitter. Relay K2 is energized then the link transmitter is to be activated, and a voltage (or ground) is provided at this terminal in accordance with backplane circuit board wire jumpers as follows:

Output Voltage	Backplane Jumper Installed
Ground	W5
+5 Volts	W6
+12 Volts	W4

5.2.31. TB53 (K1 Relay)

This terminal provides a voltage (or ground) output through a relay contact whenever the repeater transmitter is to be activated. In Mark 4C controllers this output should be used to control the repeater transmitter. In Mark 4 repeaters, transmitter control is done with transistor switching and no connection to this terminal is necessary. The voltage applied to this terminal is provided in accordance with backplane circuit board wire jumpers as follows:

Output Voltage	Backplane Jumper Installed
Ground	W8
+5 Volts	W9
+12 Volts	W7

5.2.32. TB54 (PTT)

This terminal is pulled to ground whenever the local microphone push-to-talk switch is depressed. Alternatively, the terminal may be pulled to ground to cause the repeater transmitter to operate; however, if this terminal is used for control, the transmitter will remain active as long as the terminal is held at ground (logic zero) with no timeout. In addition, DTMF access codes will not be accepted from any inputs except the local microphone when this terminal is held low. In some situations, these characteristics may be desirable, but in most cases, the XHLD input (TB43) is more suitable for keeping the transmitter active.

5.2.33. TB57 - TB58 (Phone Line)

On units equipped with a non-registered autopatch interface, the telephone line should be connected to these terminals. These terminals are not used when an FCC registered interface is provided.

5.2.34. TB59 - TB60 (Command Phone)

On units equipped with a non-registered optional command telephone interface, the command telephone line should be connected to these terminals. These terminals are not used when an FCC registered command phone interface is provided.

5.3. INITIAL INSTALLATION

5.3.1. GENERAL COMMENTS

The Mark 4 is designed for convenient mounting in a standard 19-inch equipment rack, although other mounting arrangements may be used if desired. Mounting arrangements should consider that access to audio and backplane circuit board adjustments is gained by removing the unit top cover and access to the receiver and transmitter modules of Mark 4 repeaters is gained by removing the unit bottom cover.

The Mark 4 should be installed in a well ventilated, moisture-free location. Electronic component reliability degrades when components are subjected to temperature extremes, so superior long-term performance can be obtained by selecting a location with moderate ambient temperatures. In addition, it should be recognized that equipment mounted near the top of a rack filled with electronic equipment may be subjected to high temperature caused by "chimney effect" air flow from other heat producing equipment in the rack.

5.3.2. MARK 4 REPEATER INSTALLATION PROCEDURE

1. Provide a ground connection from the Mark 4 cabinet to a good earth ground using a 16-gauge or heavier wire strap. Stranded wire is preferred for this connection. Do not rely upon mechanical mounting or power line connections to provide grounding.

2. Operate the front panel power/squelch switch to the off (fully counter-clockwise) position and connect the Mark 4 power cord to a 120VAC, 60 Hz power source. Enter command access code 9161 (Command Function 1 ON) to allow front panel squelch adjustment.

3. In applications using two antennas, connect from the rear panel receiver coaxial jack to the receiving antenna, and connect from the rear panel transmitter jack through a Bird model 43, or equivalent, RF power meter to the transmitting. For proper repeater operation, the antennas should be positioned to achieve 90dB or greater isolation loss (information concerning the physical antenna separation need to obtain 90dB isolation should be available from the antenna manufacturer). Type RG-213/U, or equivalent, coaxial cable should be used for antenna connections. The antennas should be tuned to the repeater operating frequencies and should present a 50 Ohm resistive load.

In applications where a duplexer is used, the duplexer should be pre-tuned to the repeater operating frequencies in accordance with the instructions of the duplexer manufacturer. For proper repeater operation, the duplexer should provide 90dB or greater isolation between transmitter and receiver ports. Connect from the Mark 4 rear panel transmitter and receiver coaxial jacks to the appropriate duplexer terminals using RG-213/U or equivalent coaxial cable. A Bird model 43, or equivalent, RF power meter should be inserted between the Mark 4 transmitter jack) and the duplexer (NOT between the duplexer and the transmitting antenna).

4. Operate the control switch to the local (down) position; then rotate the front panel power/squelch control fully clockwise and observe that the power lamp lights. Wait approximately 10 seconds or the processor to reset. When the reset interval is complete, the repeater transmitter, the front panel transmit lamp, and all front panel status lamps should be off.

5. Connect the microphone to the front panel microphone jack and momentarily depress the microphone push-to-talk switch to cause the repeater transmitter to operate. Observe the forward and reflected power readings on the RF power meter and determine that the VSWR is 1.2:1 or lower. A VSWR greater than 1.2:1 indicates a faulty or improperly tuned antenna system (or duplexer) and continued operation under this condition may cause permanent damage to the Mark 4 transmitter. The condition cannot be cured by adjusting the Mark 4 and must be remedied by correcting the antenna system.

6. When the local microphone push-to-talk switch is depressed, the repeater transmitter and the transmit lamp will operate. When the push-to-talk switch is released, the transmitter will continue operating for approximately 5 seconds; then the transmitter will become inactive and the lamp will extinguish.

7. Set the speaker to the "repeater" (up) position. This allows the front panel speaker to monitor repeater transmitter audio which includes repeated receiver audio plus autopatch and all tones and messages generated by the Mark 4.

8. Set the control switch to the repeater (up) position. This allows the Mark 4 to operate in response to received signals.

9. Unsquelch the receiver by rotating the front panel squelch control in the counterclockwise direction until receiver status lamp 1 lights and then adjust the front panel speaker volume control for a comfortable listening level. With the receiver unsquelched, the transmit lamp will light and the transmitter will operate.

10. Set the receiver squelch by rotating the squelch control clockwise until the receiver status lamp (1) just extinguishes. The squelch control should be left in this position. Transmit lamp will remain lighted and the transmitter will remain operating for approximately 5 seconds after the squelch control is set. A short courtesy tone will be heard from the local speaker during the 5 second interval.

This completes the Mark 4 repeater basic installation. If linking, telephone interconnect, or emergency power features are to used at this time, then refer to the appropriate additional features installation sections below. When the installation is complete, it is appropriate to program the callsign identification and, instructions for doing this are contained in the Commands section of this manual. When the Mark 4 is to be left unattended, it is good practice to set the speaker volume control to minimum. The speaker volume control does not affect re-transmitted audio.

5.3.3. MARK 4C CONTROLLER INSTALLATION PROCEDURE

The Mark 4C controller may be interfaced to almost any receiver and transmitter to create a sophisticated repeater installation. However, it should be recognized that repeater service differs from transceiver operation in that repeater service requires simultaneous transmitter and receiver operation. Receivers and transmitters, built specifically for repeater operation, use extensive shielding and electrical bypassing to prevent transmitter energy from degrading receiver performance. At moderate power levels, transmitter to receiver isolation should be more than 90dB, and even greater isolation is required when power amplifiers are used. In addition, transmitters operating in repeater service are subject to high duty cycles and are generally designed for continuous duty operation. For these reasons, considerable effort may be required in creating a repeater from transmitter and receiver units which were not originally designed for repeater service. These issues are unrelated to Mark 4C controller operation and are outside the scope of this manual. The following procedure describes the addition of a Mark 4C controller to a repeater which is assumed to be already in service.

1. Remove any control logic and audio connections between the repeater receiver and transmitter.

2. Provide a ground connection from the Mark 4C cabinet to a good earth ground using a 16 gauge or heavier wire strap. Stranded wire is preferred for this connection. Do not rely upon mechanical mounting or power line connections to provide grounding. If the Mark 4C is not being mounted in the same equipment rack as the repeater, then a ground strap should be connected between the two equipment racks or the two racks should be grounded to a common point.

3. Connect from the repeater receiver audio output to Mark 4C rear panel input jack JA8. Shielded cable should be used for this connection. Mark 4C receiver audio input is high impedance (approx. 10 KOhms) and may be drive from a 0.5 volt peak-peak or greater source. Generally, sufficient drive can NOT be obtained from receiver low impedance loudspeaker output terminals without introducing excessive distortion; therefore, it is recommended that audio be taken from a line output or other high level receiver output. If the repeater is to be used for CTCSS operation with a CTCSS decoder installed in the Mark 4C, then audio must be taken from a point in the receiver which has good low frequency response so the CTCSS tone can be passed to the Mark 4C without excessive attenuation.

4. Connect a TTL voltage compatible signal from the receiver carrier-operated squelch (COS) circuit to Mark 4 rear panel terminal TB40. This signal should be an active high signal, that is, the receiver output should pull TB40 to +5 volts when a signal is present at the receiver input, and the receiver output should go to ground (0 volts) when no signal is present at the receiver input (a pulldown resister is included in the Mark 4C so the receiver may provide an open circuit output when no signal is present rather than a) volt output). Under no circumstances, should the receiver apply a positive voltage greater than 5 volts or any negative voltage to input TB40. If the receiver provides only an active low COS output, then see the Processor Circuit Board section of this Manual for wiring jumper changes which may be made to invert the Mark 4C input. If the receiver does not provide a TTL voltage compatible output, then see Figure 1 for suggested receiver circuit modifications.

5. Connect from the Mark 4C rear panel audio output jack JA6 to the repeater transmitter audio input. The Mark 4C can deliver approximately 1.0 volts peak-to-peak at this output which should be sufficient to drive any transmitter high impedance input. Shielded cable should be used for making this connection to minimize noise pickup.

6. Connect from Mark 4C rear panel terminal TB53 to the repeater transmitter control input. This Mark 4C output provides a relay contact closure to ground to activate the repeater transmitter. Wire jumper options in the Mark 4C may be changed if desired to provide either +5 volts or +12 volts to activate the repeater transmitter. See the Backplane Circuit Board section of this manual for information on altering the wire jumper positions.

7. Operate the front panel power/squelch switch to the off (fully counterclockwise) position and connect the Mark 4C power cord to a 120VAC, 60 Hz power source.

8. Rotate the power/squelch control fully clockwise and observe that the power lamp lights. Wait approximately 10 seconds for the processor to reset; during this time, the repeater transmitter may operate. When the reset interval is complete, the repeater transmitter, the front panel transmit lamp, and all status lamps are off.

5.4. TELEPHONE INTERCONNECT INSTALLATION

Telephone loops from a customer premise to the serving telephone office are normally designed by the telephone company to have a loss of less than 5dB. Audio levels in the Mark 4 are factory adjusted to operate properly with such loops. Therefore, interconnect audio levels do not normally require adjustment upon installation. If adjustment is required, see Audio Circuit Board Adjustment in the Audio Board Circuit Description.

5.4.1. Interconnect Registration

Any equipment directly connected to the public switched telephone network in the United States must be registered in accordance with Part 68 of Federal Communications Commission regulations. The Mark 4 is available with a registered interconnect option for these applications. Connection may be made only to single party lines and not to multi-party or coin lines. Before connecting the Mark 4 to the telephone network, the telephone company should be informed that such a connection will be made and given the following registration information:

FCC Registration Number: AU492X-69442-DP-E
Ringer Equivalence : 0.8B

The Mark 4 may be used without the registered interconnect option in other applications. The standard (non-registered) interconnect arrangement used in the Mark 4 meets all applicable specifications in Bell System PUB 61310 and is, therefore, compatible with all equipment designed to telephone industry standards.

5.4.2. Non-Registered Autopatch Interface Installation

1. Connect the two (tip and ring) wires of the autopatch telephone line to rear panel terminals TB57 and TB58. Either wire may be connect to either terminal These are balanced line terminals which should be connected only to the telephone line; no other equipment or grounds should be connected to these terminals. Caution: ringing and high-voltage transients present on telephone loop pairs exceed 100 volts, so observe safety precautions when making these connections.

2. Remove the repeater or controller top cover and locate potentiometers R64 and R69 on the Audio Circuit Board. Circuit board component layout drawings are given in the Appendix of this Manual to aid in locating these components.

3. With the Mark 4 operating, depress the local microphone push-to-talk switch and enter the autopatch access code, 501, using the local microphone tone pad.

4. Release the push-to-talk switch and observe that status lamp 2 is lighted and that dial tone is heard from the local speaker (the speaker switch must be in the repeater <up> position for dial tone to be heard). Note: proceed to step 5 within 20 seconds or the telephone connection will abort automatically. This is a normal condition.

5. Establish a telephone call to an assistant (another repeater user) by depressing the local microphone push-to-talk switch and entering tone pad digits corresponding to the telephone number to be called.

6. When the call is established, adjust potentiometers R64 (audio level from phone line to repeater transmitter) and R69 (audio level to phone line) if necessary. These potentiometers are factory adjusted prior to shipment so adjustment should not normally be required unless the autopatch telephone line has excessive loss. Improper adjustment of these potentiometers may result in distortion, so if adjustment is needed, it is suggested that call be placed to several repeater users to verify that the newly adjusted values are correct. Additional information concerning these adjustments is given in the Audio Circuit Board section.

7. Terminate the telephone call by depressing the push-to-talk switch and entering the autopatch clear code, #51, using the local microphone tone pad. Observe that the telephone connection is released and that status lamp 2 extinguishes.

This completes installation and initial testing of the autopatch telephone interface.

5.4.3. Registered Autopatch Telephone Interface Installation

1. Remove the unit top cover. Connect the autopatch telephone line modular jack J4 on the Audio circuit Board. Circuit board component layouts are given in the appendix of this manual to aid in locating Jack J4. Telephone line wiring should be routed through the removable cover plate on the Mark 4 rear panel.

2. Proceed with steps 2 to 7 in Non-Registered Autopatch Interface Installation procedure above.

5.4.4. Optional Non-Registered Command Telephone Interface Installation

1. Connect the two (tip and ring) command telephone line wires to rear panel terminals TB59 and T60. Either wire may be connected to either terminal. Caution: ringing voltage and high voltage transients may be present on telephone line so observe safety precautions when making these connections.

2. Place a telephone call to the command telephone line from another telephone. Observe that the Mark 4 answers the incoming call within 20 seconds after the ringing begins.

3. When the incoming call is answered by the Mark 4, enter the digits 123 using the tone pad on the calling telephone (if the call was initiated from a rotary dial telephone, then a separate DTMF tone source must be provided to make this test).

4. Depress and then release the push-to-talk switch on the local microphone and observe that the Morse or voice message "OK" is sent on the repeater tail. The message can be observed by listening to the local speaker if the front panel speaker switch is in the repeater (up) position.

5. From the distant telephone, observe that the Mark 4 automatically disconnects from the telephone line in less than one minute.

This completes the installation and initial testing of the optional command telephone interface.

5.4.5. Optional Registered Command Telephone Interface Installation

1. Remove the unit top cover. Connect the command telephone line to modular telephone jack J3 on the Audio Circuit Board. Circuit board component layouts are given in the Appendix to aid in locating jack J3. Telephone line wiring should be routed through the removable cover plate on the rear panel of the Mark 4.

2. Proceed with steps 2 to 5 in the Non-Registered Command Telephone Interface Installation procedure above.

5.5. POWER SOURCE OPERATION INSTALLATION

An external DC voltage source may be used to power the Mark 4 if desired. The DC source may be used alone, that is, with no AC power source, or both AC and DC sources may be connected to the unit. When both AC and DC sources are connected to the unit, power is normally taken from the AC source and operation transfers automatically to the DC source in the event of a failure of the AC source. Operation from the AC source is also controlled by the front panel power switch: when the switch is set to the off position, the AC power source is removed from the unit and operation automatically transfers to the DC source if a DC source is connected.

The Mark 4 is wired at the factory to accept input from a nominal 13 volt DC source. (jumpers may be changed on the Power Supply Circuit Board to allow operation from 24-28 volts. Information for making this change is given in the Power Supply Circuit Board section.) The external source should maintain voltage in the range of 12 to 14.5 volts and should be capable of delivering a maximum current of 6 amperes (3 amperes for Mark 4C controllers). The source should be free of transients and should have a ripple of less than 1 volt. Automobile storage batteries are well suited for this use. The Mark 4 does NOT deliver current into the DC power source as might be needed for maintaining storage battery charge.

> **WARNING:** The Mark 4 is a negative ground load and must be used only with negative ground or floating DC power sources. Permanent damage will result if a positive ground power source is connected to the Mark 4.

1. Connect from the DC power source negative output to the black binding post terminal on the rear panel of the Mark 4, and connect from the positive output of the power source to the red binding post terminal on the rear panel of the Mark 4. The wire gauge used to make these connections will depend on the length of the wire used. 14 Gauge wire should be sufficient for wiring distances less than 6 feet (2 meters). Heavier wire gauge will be required for longer wire lengths.

2. Unplug the Mark 4 power cord from the AC power switch.

3. Set the front panel speaker switch to the repeater (up) position, rotate the squelch control counterclockwise and observe that receiver squelch noise is heard from the speaker. This indicates that the Mark 4 is operating from the DC power source.

4. Return the squelch control to its original position to quiet the receiver. Using a DC voltmeter, measure the voltage at the Mark 4 rear panel binding post terminals. If the voltage exceeds 14.5 volts then adjust the external power source to reduce the applied voltage.

5. Depress the local microphone push-to-talk switch to cause the repeater transmitter to operate. With the transmitter operating, measure the voltage at the rear panel binding post terminals. If the voltage is less than 12 volts then adjust the external power source to increase the applied voltage. The external power source should be adjusted to simultaneously satisfy the measurements in steps 4 and 5. If this cannot be done, then heavier gauge wire must be used to connect from the power source to the Mark 4.

6. Use a monitor receiver to listen to the repeater transmitter and observe that there is no hum or noise on the transmitted signal. If hum is heard, then additional filtering must be added to the external power source to reduce its ripple voltage.

7. Release the push-to-talk switch and observe that the Morse message "EP" (or the emergency power voice message) is sent on the repeater tail.

8. Re-connect the power cord to the AC power source.

9. Momentarily depress the microphone push-to-talk switch and observe that the Morse message "CP" (or the commercial power voice message) is sent on the repeater tail. This confirms that the Mark 4 is operating from the AC power source.

This completes the installation and testing of DC power source connections.

5.6. COMMAND RECEIVER INSTALLATION

Command access codes may be entered into the Mark 4 from a separate command receiver. Input from the command receiver is routed only to the Mark 4 DTMF decoder for the purpose of accepting commands. It is not routed to the telephone interface or the repeater transmitter. The command receiver provides one means for entering commands into the Mark 4. In some applications, it may be preferable to enter commands only from the autopatch telephone line or from the optional command telephone interface, and in these cases, a command receiver is not required. A command receiver may be connected to the Mark 4 as follows:

1. Connect from the command receiver audio output to Mark 4 rear panel jack JA2. Shielded wire should be used for this connection. The command receiver should be adjusted to provide a level of approximately 0.5 volts peak-peak to the Mark 4 input. It is suggested that the audio be taken from the speaker output of the command receiver to avoid distortion. The Mark 4 audio input is high impedance (> 10 KOhms).

2. Connect a TTL voltage level compatible control signal from the command receiver to Mark 4 rear panel terminal TB44. This signal should be an active high signal which applies +3.5 to +5 volts to TB44 when a signal is present at the command receiver, and ground (or less that +1 volt) when no signal is present at the command receiver input. Under no circumstances should a voltage greater than +5 volts or less than 0 volts be applied to TB44. The circuits shown in Figure 1 may be helpful in converting the command receiver output signal to these voltage levels. The Processor Circuit Board section of this manual describes jumper wiring changes which may be made to accommodate a command receiver which provides only an active low output.

   Note: When a received signal present (COS) indication is connected from the command receiver to the Mark 4, any signal present on the command receiver input frequency will appear as a command signal to the Mark 4. These extraneous signals may interfere with proper recognition of access codes from other sources, such as the repeater receiver. This problem can be avoided by using CTCSS in the command receiver and connecting from the command receiver CTCSS decoder to the Mark 4 command input TB44

5.7. MULTIFAX TO RECEIVER INTERFACING

In Mark 4C repeaters, all wiring is provided from the Multifax circuit board to measuring circuits in the MR4 receiver and no field wiring or adjustments are needed for the Receiver Readout function.

In Mark 4C controllers, connections must be made from the Mark 4C rear panel terminal strip to suitable circuitry in the repeater receiver before using this function. Connections should be made using shielded cable and done as follow:

REAR PANEL TERMINAL TB	SIGNAL
46	Receiver Ground
48	Receiver Signal Strength
49	Receiver Discriminator
50	Receiver Modulation

For each of the three receiver parameters, Table 5.1 below, lists the voltage levels which must be applied to the Mark 4 rear panel terminals to obtain the proper voice message readout. VOLTAGES APPLIED TO MARK 4 ANALOG INPUTS MUST BE IN THE RANGE ZERO TO POSITIVE 5 VOLTS DC OTHERWISE PERMANENT DAMAGE MAY RESULT. If the appropriate voltage levels are not available from the repeater receiver then suitable interface circuitry will be needed. The circuitry required will be different for various receivers and minimal if the equipment provides test access points having positive output voltages relative to ground.

5.7.1. TABLE 5.1

5.7.2. Receiver Readout Function Voltage Levels

FREQUENCY OFFSET		SIGNAL STRENGTH		MODULATION CHECK	
KHz	Volts	S	Volts	KHz	Volts
-5	2.80	1	0.50	1.5	0.15
-4	2.65	2	1.00	2.0	0.30
-3	2.50	3	1.50	2.5	0.45
-2	2.35	4	2.00	3.0	0.60
-1	2.15	5	2.50	3.5	0.75
ON	1.95	6	3.00	4.0	0.90
+1	1.51	7	3.50	4.5	1.01
+2	1.29	8	4.00	5.0	1.12
+3	1.07	9	4.50	5.5	1.27
+4	0.85	6.0	1.40		
+5	0.64	6.5	1.45		

5.8. OTHER MULTIFAX DIGITAL TO ANALOG READOUT CONNECTIONS

Five additional analog inputs are available which may be used for monitoring other equipment at the repeater site. The five inputs are designated AD1-AD5 and they appear on rear panel terminals TB-2 to TB-6 respectively. Connections should be made using shielded cable. The shield may be terminated at the Mark 4 on the rear panel terminal TB-1.

Signals applied to the analog inputs MUST BE IN THE RANGE OF ZERO TO 5 VOLTS DC. However, the input voltage level is linearly scaled by the Mark 4 to give reports of other useful quantities. Below is the analog designation, scaled output reading, and rear panel terminal TB:

DESIGNATION	READOUT RANGE	REAR PANEL TB
AD1	Temperature 0-120 degrees	2
AD2	Voltage 0-120 volts	3
AD3	0-120	4
AD4	0-120	5
AD5	0-25	6

AD3, AD4 and AD5 may be used for any other output readings desired.

To illustrate how these inputs may be used, consider that we wish to monitor the voltage of a 12 volt DC backup power source. An appropriate input to use for this purpose is the TB-6 input since it will give good measurement resolution of a 12 volt signal. To use this input, recall that voltages applied to the Mark 4 MUST BE IN THE RANGE OF ZERO TO 5 VOLTS DC. Thus, we must connect an interface circuit between the power source and the Mark 4 will reduce the maximum source voltage (25 volts for this function) to 5 volts. This reduction can be achieved using a resistor L-network as shown in Figure 1 below. Using this network, the voltage actually applied to the Mark 4 input will be 2.40 volts when the power source voltage is 12 volts. The Mark 4 will then scale its actual input voltage to give a correct reading of 12.0 volts when access code for this reading is entered.

Figure 1
Reducing Source Voltage

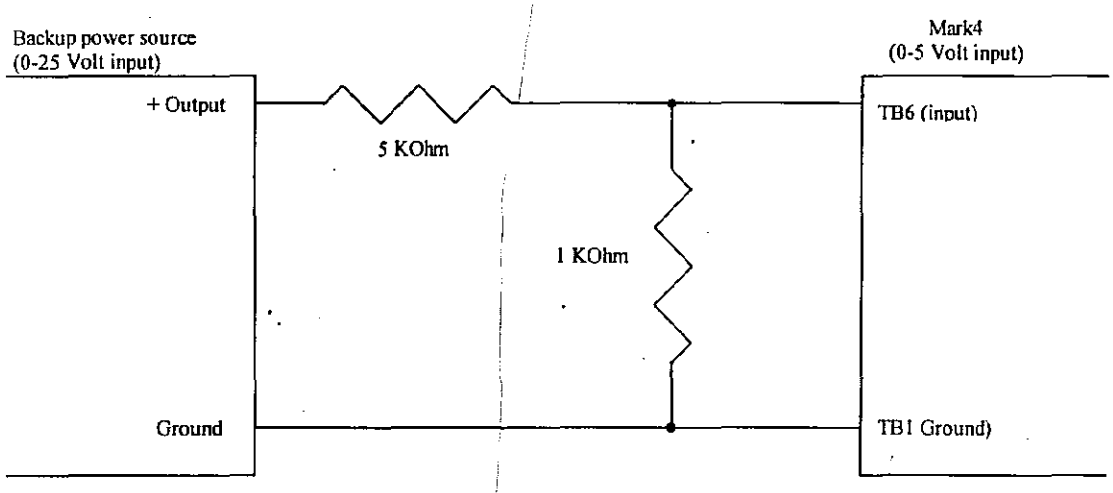

5.9. OTHER CONNECTIONS

5.9.1. Telephone Line Sharing

Logic signals are provided so that several Mark 4 repeaters may share a single telephone line. Whenever the Mark 4 telephone interconnect is in use, output BZ on rear panel terminal TB18 is pulled to ground (a logic zero) by an open collector gate. This signal may be connected to the AB input on rear panel terminal TB17 of any other Mark 4 which is sharing the same telephone line. When a ground (logic zero) appears on the AB input, the Mark 4 determines that the telephone line is in use and will not initiate a call. A "phone line busy" message is given to repeater users who attempt to place a call while the line is in use. Since the BZ output is an open collector output, any number of Mark 4 repeaters may share the same telephone line. Property operation requires only that the BZ output of each repeater be connected to the AB input of all other repeaters sharing the same telephone line.

5.9.2. MULTIFAX AND MESSAGE MASTER BATTERY BACKUP

Message Master speech is stored in Random Access Memory (RAM) so messages will be lost if a power failure occurs. Also, the clock in the Multifax option can be affected by disturbances of commercial line power. Battery backup must be provided. If 12 VDC is used as a battery backup for the entire Mark 4, no additional battery backup is needed. The connection is to rear panel binding post terminals.

If the Mark 4 is operated only from a commercial AC power sources then a separate battery backup for the clock can be provided by connecting a 3 volt battery to terminals E4 and E5 on the Multifax circuit board. The positive battery terminal should be connected to E4 and the negative battery terminal should be connected to E5. During normal operation, when AC power is present, there will be no current drain from the battery. During a failure of the AC power source, the current drain from the 3 volt battery will be less than 10 mA. Typically, even AA size batteries will be sufficient to maintain proper clock operation in excess of one year.

5.9.3. USER FUNCTION AND COMMAND OUTPUT CONNECTIONS

See Rear Panel Terminal Designations and Terminal Descriptions. See, also, Figure 2, Figure 3, and Figure 4 on the following pages.

5.10. LINKING ARRANGEMENTS

Linking arrangements can be designed in many different ways depending upon the capabilities desired in the linked system. Linking control provided by the Mark 4 is designed to accommodate a wide variety of linking arrangements. The following describes the connections and operation of a Mark 4 with the full duplex link arrangement shown in Figure 4 on the following page.

5.10.1. Connections

Four input/output connections are provided on the rear panel of the Mark 4 for linking. These connections may be used as follows:

1. Audio from the link receiver should be connected to jack JA3. The audio level from the link receiver should be in the range from 0.5 volt to 1 volt peak-peak for full deviation at the receiver. Adjustment capability is provided on the Audio Circuit Board so the exact level applied to the Mark 4 input jack is not critical (an adjustment procedure is given in the Audio Board section of this manual). This input is high-impedance so shielded cable should be used for making this connection.

2. Audio output from the Mark 4 for the link transmitter is available at jack JA4. The audio output level is approximately 1.0 volts peak-peak. Shielded cable should be used for connection to the link transmitter audio input. Adjustment should be made at the link transmitter to obtain proper transmitter deviation.

3. A "received signal present" (COS) indication from the link receiver should be connected to terminal TB42. This signal, referred to as COSL, should be a TTL compatible logic signal with a logic of 1 (+5 volts) indicating that signal is present and a logic 0 (ground) indicating that no signal is present. An appropriate signal can usually be derived from the carrier operated squelch (COS) circuit of the link receiver. Figure 5 shows some circuits for converting the receiver output to TTL levels if a TTL interface is not available at the receiver. Jumper wires on the Mark 4 processor circuit board can be changed to accommodate a link receiver having output which is inverted from the levels given here; that is, a link receiver which outputs a logic 0 (ground) when a received signal is present. See the Processor Board section of this manual for information on changing the jumper wires.

4. The contacts of relay K2, available on rear panel terminal TB52, may be used for controlling the link transmitter. Relay K2 is energized by the Mark 4 whenever the link function is active. The voltage available at terminal TB52 when the relay is energized is determined by jumpers installed on the backplane circuit board. The jumpers allow different output voltages to be selected for ease of interfacing to the link transmitter. See the Rear Panel Terminals sections of this manual for information regarding the installation of these jumpers.

A ground reference for the logic signals should be connected from terminal TB1, TB16, TB31, or TB46 of the Mark 4 to a suitable ground on the link transmitter and receiver.

5.10.2. Link Operation

The presence of a logic (+5 volts) on input COSL means that a signal is present at the link receiver. when the link is inactive, that is when no link function access code has been entered, the Mark 4 responds to this input by assigning the DTMF decoder to the link receiver audio input if the decoder is not assigned to another input source. The DTMF decoder is assigned, on a priority basis, and the link input is the lowest priority source -- someone always has to be last! When the DTMF decoder is assigned to the link receiver, any user function access codes may be entered from the link. The presence of a logic 1 (+5 volts) signal on the COSL input WILL NOT, by itself, cause the repeater transmitter to operate or allow link receiver audio to be passed to the repeater transmitter; a link function must be activated for these to happen.

The link function is activated by entering the Link 1 access code (532). This access code may be entered from either the repeater receiver or the link receiver. Since the link function is a user function, it is subject to the same timeout limits and inhibitions which are imposed on other user functions by control operator commands. Activating the link function causes the following conditions to occur:

1. Relay K2 is energized to allow the link transmitter to be activated;
2. Link receiver audio is routed to the repeater transmitter; and,
3. Message L1 is sent on the repeater tail to indicate to repeater users that the link is active.

When the link function is active, the presence of a logic 1 (+5 volts) signal on the COSL input WILL cause the repeater transmitter to operate. That is, the Mark 4 will respond to signals received from the link in the same way that it responds to signals from the repeater receiver. The link function will remain active until a timeout occurs or until the function is cleared by entry of the User Function clear code (#50). The clear code may be entered from the link or from the repeater receiver.

Message L1 is a command programmable message which is sent on the repeater tail to inform users that the link is active. This message, and all other messages, such as tail messages and callsign identifications, are not routed to the link transmitter.

Audio from the link receiver is also routed to the telephone interconnect, and audio from the telephone interconnect is routed to the link transmitter. the audio routing allows autopatch, autodial, and other telephone interconnect features to be accessed from the link. When accessing a telephone interconnect function from the link, a user should first activate the link by entering the Link Function access code (to cause the link transmitter to turn on) and then enter an autopatch or autodial access code.

The connections and characteristics given above describe the operation of full duplex, full-time links. Other link characteristics, such as half duplex operation, can be obtained by using the COS input, repeater transmitter control output, and other audio connections. These connections

must be individually determined to obtain the link characteristics desired in a particular application. The following characteristics should be considered when designing a link system:

1. Audio from the Mark 4 is present at rear panel jack JA4, and therefore, at the link transmitter audio input, even when the link function is not active. This is not generally a problem because the link transmitter does not operate unless the link function is active.

2. Relay K2 is energized during the entire time that the link function is active. If this relay is used to activate the link transmitter then the link transmitter will be active continuously when the link function is active. If it is desired to have the link transmitter turn on and off with repeater and link activity, then external circuitry should be provided to combine the K2 relay output with either the repeater receiver COS signal (TB40) or the repeater transmitter control signal (TB51).

3. If the link is designed such that signal is continuously present at the link receiver (and, therefore, the COSL input tot he Mark 4 is continuously active) when the link is in use, then the repeater transmitter will also be continuously active. Further, the link message (L) will not be sent because there will be not tail if the transmitter is continuously active, and the link function will not timeout automatically because the continuous presence of COSL will keep extending the usage sensitive timeout limit.

Again, there are many ways to operate a linked system and each linked system must be individually designed to achieve the operational characteristics desired. The Mark 4 provides flexible control capability that can be used in many different ways.

5.10.3. Second Link Function

A second link function is also provided for use in multi-link systems. This function behaves identically to the link function with respect to the four input/output interfaces (COSL, K2 relay, Link audio Input and Link Audio Output); however, it also causes user function output 1 (rear panel terminal TB19) to be activated. The user function output may be used for controlling external relays or circuits to switch between two different links. A separate command programmable message, L2, is sent on the repeater tail when the second link function is active.

6. CIRCUIT BOARDS

6.1. CIRCUIT DESCRIPTION

The audio circuit board is a double-sided epoxy fiberglass printed circuit board which contains all audio and telephone interconnect components. It is mounted on the top side of the Mark 4 and may be accessed by removing the unit top cover. Connections to the board are made through two multi-pin DIP style jacks. One jack (J2) connects to the processor circuit board via a ribbon cable; the other jack (J1) connects to the backplane circuit board also via a ribbon cable. Units equipped with the optional registered telephone interconnect have an additional jack (J4) for telephone line connection, and boards equipped with the optional registered command telephone interface have a fourth jack (J3) for command telephone line connection. The board may be removed from the Mark 4 by disconnecting the plug-in connectors and removing the four corner mounting screws.

Audio from the repeater receiver enters the audio circuit board at J1 pin 20 at a fixed level of 1 volt peak-peak. The receiver audio is amplified and may be combined with audio from a secondary receiver (J1 pin 21) in U3 before being sent to analog delay circuit U2. If a secondary receiver is used, its output level should be adjusted to 1 volt peak-peak before connection to the Mark 4. U2 delays receiver audio approximately 50 msec. This is sufficient time for the Mark 4 DTMF decoder to respond when DTMF tones are entered from the repeater receiver so transmitter audio can be muted before any DTMF tone reaches the transmitter. The delay time is determined, in part, by clock oscillator U1 and associated components. The two phase-inverted outputs of U2 are combined by R34 and passed through one section of audio gate U8 to summing amplifier U3. Potentiometer R34 is factory adjusted for maximum balance and minimum distortion and will not require field adjustment unless U2 is replaced. The output of U3 is a fixed level point and all audio signals have a maximum amplitude of 1 volt peak-peak at this point (TP1). Form this point, the audio is routed to (1) the link transmitter audio output (J1 pin 19) via amplifier U9, (2) to the repeater transmitter audio output via one section of audio gate U10 and two sections of amplifier U11, and (3) to telephone interconnect summing amplifier U9.

Audio from local microphone enters the audio circuit board on J1 pin 22 at a level of about 30 mV. This audio signal is first amplified by U4 and then routed through audio gate U8 to summing amplifier U3 where it is combined with audio from the repeater receiver. Potentiometer R61 allows local microphone audio level to be adjusted to 1 volt peak-peak at the fixed level test point TP1.

Link receiver audio enters the audio circuit board on J1 pin 23; is amplified by U4, and is routed through a section of audio gate U8 to (1) summing amplifier U11 for connection to the repeater transmitter, and (2) summing amplifier U9 for connection to the telephone interface.

Audio sources from the repeater receiver, the link receiver, and the telephone interface are combined in the first section on amplifier U11 for connection to repeater transmitter. This combined audio signal may be monitored at test terminal E6 at the output of the amplifier. Audio from an external callsign identifier or from the Multifax option board may be entered to the audio circuit board on J1 pin 18. This audio input signal is combined with audio from the first U11 amplifier section and with audio from the Morse tone generator in the second section of amplifier U11. The output of the second U11 amplifier section leaves the audio circuit board on

J1 pin 16 for connection to the repeater transmitter. An auxiliary audio output is also provided on J1 pin 17. This auxiliary output is used to drive the front panel local speaker through a power amplifier on the backplane board, and it serves as an input to the Multifax option board.

Morse coded message audio tones are generated by oscillator U1 and its associated components. The oscillator operates continuously and its output is keyed in audio gate U10 under control of the processor circuit board to generate the Morse messages. The oscillator square wave output is filtered to a pleasant sounding tone with very little harmonic content by R54, R55, C40 and C41. Transistor switches Q4 and Q5 are also under the control of the processor circuit board; they function to switch the tone frequency and amplitude, respectively, between two discrete levels.

Audio from the repeater receiver, the link receiver, and the local microphone is combined in amplifier U9 for connection to the telephone interface. This combined audio is routed through audio gate U10 to one section of amplifier U12. The two sections of amplifier U12 operate as an active hybrid to deliver audio to the telephone line and to recover audio from the telephone line. In addition, the hybrid arrangement suppresses audio reflection from the telephone line such that receiver (and local microphone) audio is partially prevented from reaching the repeater transmitter. The degree of suppression, or hybrid balance, depends upon the impedance and length of the telephone loop, but potentiometer R81 allows some compensation to be made for variations in telephone loop characteristics.

The standard telephone interface uses transformer coupling for unbalanced to balanced conversion and isolation. Relay K2 is energized under processor control to allow connection to the phone line. Optoisolator U14 and associated components sense line ringing voltage and report the ringing status to the processor. Diodes CR8, CR9 and capacitors C60, C61 protect the Mark 4 from transient voltages which may be present on the telephone line. Telephone line connections enter the audio circuit board on J1 pins 11 and 12. The optional registered telephone interface uses a sealed active module, PLI-2, and interfaces to the processor board through transistor switches Q10, Q11 and Q12. Connection to the telephone line from the registered interface is made via J4.

The optional command telephone interface also uses transformer coupling for isolation. Relay K1 is energized under processor control to cause connection to the phone line. Optoisolator U13 senses line ringing voltage and reports the ringing condition to the processor. The command interface is unidirectional: audio from the telephone line is routed through amplifier U5 to DTMF decoder circuits; no audio is routed to the command telephone line from the Mark 4. Module PLI-1 replaces relay K1, Optoisolator U13, the line coupling transformer and associated circuitry in the optional registered command interface. Connection to the telephone line from the registered interface is made via J3.

Audio signals are switched between the various input and output ports by transmission gates U8 and U10. These gates are driven by open-collector buffers U6 and U7 which are controlled by the processor. When individual buffer sections are turned off by the processor, their outputs, and the control inputs to their associated transmission gates, are pulled to +12 volts by resistors; this causes the transmission gates to conduct and allows audio signals to pass through the transmission gates. Buffer sections turned on by the processor pull the control inputs of their associated transmission gates to ground; this causes the transmission gates to block audio signals.

Audio from all input ports is also routed to summing amplifier U5 for connection (via J1 pin 3) to DTMF decoder circuitry on the processor board. Sections of buffer U7, under processor control, are used as shunt switches to regulate audio flow to the decoder. The processor allows only one of the four shunt switches to be turned off at any time so that audio from only one input port is routed to the DTMF decoder at any time. This approach allows priority to be assigned to the command and local microphone inputs so commands cannot be impaired by interference from other sources.

Space and terminals are available on the audio circuit board for mounting a Communications Specialist model TS-32 CTCSS decoder. The decoder may be factory or field installed in Mark 4's to allow CTCSS style operation. Repeater receiver audio is taken from the output of amplifier U3 and routed to terminals for connection to the decoder; other terminals provide a means for connecting from the decoder digital output to the processor circuit board (via J2 pin 20). Satisfactory operation of a CTCSS decoder installed in this manner requires that the repeater receiver have good low-frequency audio response so that the received CTCSS tone is passed to the audio board without excessive attenuation. MR4 receivers used in Mark 4 repeaters meet this requirement, but attention should be given to this requirement when using external receivers with Mark 4C controllers.

All active circuitry on the audio board, except buffers U6 and U6, operates from +12 volts DC. An on-board voltage regulator provides +5 volts for the two buffers so +12 volts is the only supply voltage applied to the audio board. A +6 volt DC reference voltage is also generated for biasing all amplifiers; therefore, all amplifiers have a nominal quiescent output voltage of +6 volts and are driven from this level by audio signals.

6.2. ADJUSTMENT - GENERAL

Mark 4 repeaters are factory adjusted before shipment so adjustment may not be necessary before placing the repeater in service. Mark 4C controllers are also factory adjusted but may require that the receiver audio level preset adjustment be done as described in step 1 below. The procedure given below assumes that an external receiver and transmitter are connected to the mark 4C controller. To avoid interference to other stations, it is suggested that repeater and link transmitter RF outputs be terminated in dummy loads rather than in antennas when adjustments are being made.

All audio levels are specified in peak-to-peak voltage and may be measured using a high input impedance oscilloscope. Alternatively, measurements may be made using a peak responding AC voltmeter by applying a factor of two correction to the indicated meter readings. Average and rms responding audio voltmeters may be used if a sinusoidal input tone source is available. These meters are not suitable for use when voice is used as the input audio source because there is no fixed relationship between rms and peak amplitudes for voice signals. Also, some audio voltmeters give erroneous readings in the presence of strong RF fields and such meters should not be used.

Access to the audio circuit board may be gained by removing the top cover of the Mark 4. All adjustable components on the audio circuit board are single turn potentiometers which may be adjusted using a fine bladed standard screwdriver.

6.3. ADJUSTMENT - PROCEDURE

The following procedure makes use of the Testmode command to simplify the adjustment process. The term "fully deviated signal" is used below to mean a carrier signal having 4.5 to 5 KHz deviation of single tone (preferred) or speech modulation. DTMF tones should not be entered from any audio source during the adjustment procedure except as specifically mentioned below.

1. Apply a fully deviated signal to the repeater receiver input and present the input audio level by adjusting potentiometer R22 on the BACKPLANE CIRCUIT BOARD to obtain a level of 1 volt peak-peak at test point TP1 ON THE BACKPLANE CIRCUIT BOARD.

2. Enter the Testmode command (901) followed by the digit 1 from the local microphone to place the repeater in the transmission test mode.

3. Apply a fully deviated signal to the repeater receiver and adjust R61 to obtain 1 volt peak-peak at test point TP1 on the audio circuit board.

4. Adjust R88 to obtain the desired audio drive level to the repeater transmitter. The nominal setting for this adjustment produces 1 volt peak-peak at rear panel jack JA6, but the adjustment may be altered to meet various transmitter requirements.

5. Remove the signal from the repeater receiver. Speak into the local microphone and adjust R61 to obtain a transmitter audio drive level comparable to that obtained from the repeater receiver.

Omit the following step if a link receiver is not being used.

6. Enter DTMF digit 4 from the local microphone and adjust R85 to obtain the desired tone levels at the repeater transmitter. During this test mode configuration, the tone alternates between the two amplitudes which are used for sending Morse coded messages. Potentiometer R85 alters both levels and may be adjusted to suit individual preference.

7. Enter DTMF digit 3 from the local microphone and adjust R50 to obtain the desired tone pitch at the repeater transmitter. During this test configuration, the tone alternates between the two pitches (frequencies) which are used for sending Morse coded messages. Potentiometer R50 alters both pitches and may be adjusted to suit individual preference.

8. Telephone interconnect levels may be adjusted as follows OR the repeater may be returned to normal operation by exiting the Testmode and the telephone interconnect levels may be adjusted by initiating an autopatch call. To exit the testmode, enter DTMF digit 0 from the local microphone.

9. Place a telephone call to the repeater autopatch telephone line from another telephone. When ringing begins, enter DTMF digit 2 from the local microphone to cause the Mark 4 to answer the incoming call. (The presence of ringing may be determined by measuring the voltage at U14 pin 5. A voltage of less than 1 volt DC at this point means that ringing is present.)

10. Apply a fully deviated signal to the repeater receiver and adjust R69 to obtain an appropriate level at the distant telephone.

11. Speak normally into the distant telephone and adjust R64 to obtain a repeater transmitter audio drive level which is comparable to that obtained from the repeater receiver.

12. Apply a fully deviated signal to the repeater receiver input and adjust R81 to obtain MINIMUM audio drive level at the repeater transmitter. This balance adjustment is not critical and on some telephone lines the adjustment may produce only a broad shallow null.

This completes the audio circuit board adjustments.

13. Enter DTMF digit 0 from the local microphone to exit the testmode and return the repeater to normal operation.

6.4. PROCESSOR CIRCUIT BOARD

The processor circuit board contains the microprocessor (U1), memory (U10, U11, U12), and associated logic devices plus the DTMF decoder (U14, U15) and DTMF encoder (U16).

The microprocessor operates at a Crystal (Y1) controlled frequency of 1 MHz and all repeater timing is derived from this crystal time base. Upon initial power-up, reset pulses are continuously delivered to the microprocessor by sanity circuit U13 at a 10 Hz rate. when the microprocessor responds to the reset pulses and begins proper program execution, sanity pulses are created by the processor itself. These sanity pulses are rectified (CR3, Q1) and prevent U13 from generating additional reset pulses. If processor sanity is lost at any subsequent time due to a power or other transient, then U13 resumes sending reset pulses until sanity is restored.

Logic signals to control and monitor circuitry on the Audio Circuit Board are obtained from peripheral interface adapter devices U17 and U18. These signals are routed directly to the audio circuit board via J2.

All other logic output signals from the processor are latched (U21, U25, U27), buffered (U22, U23, U24, U26), and connect from the processor board to the Backplane Circuit Board via J1. The output buffers are high-voltage, open collector TTL buffers capable of withstanding 25 volts and capable of sinking 25 mA. Front panel display outputs are latched by U18 which drives light-emitting diodes CR6-CR13 directly.

Inputs to the processor board from the backplane board (via J1) connects either to input latch U19 or to exclusive- OR gate U20. All inputs are TTL level compatible and should be driven b y signals having 0 to + 0.8 volts as a logic low and +3.5 to +5 volts as a logic high. CAUTION: Driving the inputs with voltages outside this range may cause permanent damage. The exclusive-OR gate is a high impedance CMOS device which can be driven by a wide variety of TTL compatible sources; in addition, the device can be used to provide selective inversion so that either active high and active low sources may be used to drive these inputs. Inverting option jumpers are associated with each of the four inputs connection to U20 as follows:

INPUT	JUMPER
COS	E1
COSL	E2
CMD	E3
XHLD	E4

Each of the four jumpers may be installed by connecting from the jumper terminal (E1 - E4) to an adjacent +5 volts or ground terminal. If a jumper is connected to +5 volts then the gate will invert the associated input; if the jumper is connected to ground then the gate will not invert the input. THE PROCESSOR EXPECTS COS, COSL, AND CMD TO BE ACTIVE-HIGH AT THE GATE OUTPUTS. As an example of how the jumpers are used, consider that a link receiver is being connected to the Mark 4. If the link receiver COS output pulls to ground when a signal is present, then the link receiver output is active low and jumper E2 should be connected

from terminal E2 to +5 volts so that the input is inverted by the associated U20 gate. If the link receiver output is +5 volts when a received signal is present, then the link receiver output is active high and jumper E2 should be connected from terminal E2 to ground so the associated U20 gate does not invert. Jumpers are installed in a similar manner for the COS and CMD inputs.

The DTMF tone decoder consists of switched-capacitor active filter U15 and digital detector U14. Both devices are crystal controlled (Y2, 3.58 MHz) and provide extremely reliable, false-free tone detection. Input tone level to the tone detection circuitry is adjustable by potentiometer R21. The tone detector is highly sensitive and when properly adjusted it can respond to tone levels corresponding to 3/4 KHz deviation on a received signal. Difficulties experienced in reliable tone detection are usually due to excessive tone levels at a repeater user's transmitter. Excessive tone levels cause distortion products to be generated in the limiter of the repeater user's transmitter and those distortion products which fall in the frequency range of DTMF tones cannot be removed by filtering in the Mark 4; they must be removed by decreasing the tone level at the user's transmitter.

DTMF tones used by Mark 4 telephone interconnect features are generated in U16. The tone generator is also crystal controlled (Y2) and generates precise low distortion tones. Tone output level is adjustable by potentiometer R7.

All microprocessor bus signals are routed to J3 to allow complete hardware expansion capability. These signals are used by Mark 4 optional circuit boards; they are unbuffered, and improper connection to J3 may impair processor operation.

A resistive combining network is plugged into J4 when sequential tone signals are to be generated by the Mark 4. User function outputs UF3-4 and command function outputs CF4-7 are displaced when sequential tone generation is used and the sequential tone signal is taken from the processor board on J1 pin 39.

6.5. EEPROM FAULT RECOVERY

Abnormal conditions, such as exposure to lightning transients, may cause information contained in EEPROM U12 to become corrupted resulting in erratic repeater operation. This feature allows original factory programmed information to be restored into the EEPROM. The following procedure should be used to restore operation only when commands cannot be used to restore proper operation. The procedure returns all access codes and the password code to their original factory values, and the procedure deletes all field programmed messages.

1. Remove power from the Mark 4 by rotating the front panel Power/Squelch control fully counterclockwise. If an emergency power source is used, disconnect it from the rear panel terminals.

2. Remove connections from rear panel terminals 15 and 17 of terminal strip TB1.

3. Connect a short jumper between TB1 terminals 15 and 17.

4. Apply power to the unit by rotating the Power/Squelch control clockwise.

5. Wait approximately 30 seconds; then remove the jumper connected between terminals 15 and 17.

This completes the restoration procedure. Replace any connections to terminals 15 and 17 which were removed in step 2 above. Reprogram the callsign identification and any other messages as desired.

6.6. BACKPLANE CIRCUIT BOARD

The backplane circuit board 1) provides connections between other circuit boards and assemblies within the Mark 4, (2) provides connections to rear panel mounted terminal strips and jacks, and (3) contains peripheral input/output circuitry. Connections from the backplane board to other internal circuitry are made as follows:

Processor Circuit Board	J101
Audio Circuit Board	J202
Optional MF Circuit Board	J303
Optional RV Circuit Board	J404
Local Microphone	E1 - E4
Receiver/Transmitter	E14 - E27
Speaker	E28
Power Supply	E29 - E31

VOX (voice controlled transmitter) circuitry contained on the backplane board consists of amplifier U1, transistors Q1 and Q2, and associated components. Audio from the repeater receiver is fed to this circuitry through potentiometer R14 to amplifier U1 and rectifiers CR1, CR2. When receiver audio is present, transistor Q1 is turned on causing J101 pin 23 and rear panel terminal TB45 to be pulled to ground. The VOX threshold, that is the minimum detectable audio level, may be adjusted by applying an on-frequency signal with 2-3KHz deviation to the receiver input and rotating R14 clockwise until the voltage at TB45 just switches from +5 volts to ground. If the Mark 4 is commanded into VOX operation, only those received signals having a deviation greater than the VOX threshold will be recognized as valid signals.

Transmitter audio from J101 pin 17 is amplified by power amplifier U2 to drive the local speaker. The speaker volume control is mounted on the front panel so no adjustment is contained on the backplane board.

Receiver audio from terminal E22 is routed through jumper W11 and potentiometer R22 to the audio circuit board receiver input (J202 pin 20). R22 can accommodate a wide range of receiver audio output levels and allows the audio level to be set to a standard fixed value at the input to the audio circuit board. Adjustment should be made by applying a fully deviated (4.5 KHz), on-frequency signal to the repeater receiver and adjusting R22 to obtain 1 volt peak-to-peak at test point TP1 on the backplane board. The test point voltage should be measured using an oscilloscope or peak reading voltmeter and not a VOM. In Mark 4C controllers, external receiver audio should be applied to rear panel jack JA8 and then R22 should be adjusted in a similar manner.

When the Receiver Voting (RV) option is used, jumper W11 is removed and receiver audio is passed to the RV circuit board through J404 pin 6. Voted audio from the receiver having the best instantaneous signal-to-noise ratio is taken from J404 pin 5 and passed to the audio circuit board through R22. Again, R22 should be adjusted to obtain 1 volt peak-to-peak at test point TP1.

Audio mixer U1 allows audio signals from external equipment, such as a monitor receiver, to be applied to the repeater transmitter. In addition, it connects audio from the optional MF and MM circuit boards (J303 pin 10) to the transmitter audio input. Audio from external sources may be connected to rear panel jacks JA5 or JA7; the audio level applied to these jacks should be adjusted externally to obtain proper transmitter deviation.

Transmitter operation is controlled by transistor Q3 which switches +12 volts to the transmitter circuits. The processor circuit board transmitter control output (J101 pin 30) is pulled low whenever the transmitter is to be active; this, in turn, causes PNP transistor Q3 to conduct and applies +12 volts to terminal E26. In Mark 4C controllers, relay K1 is used for external transmitter control. The relay is energized to activate the transmitter and applies ground, +5 volts, or +12 volts to rear panel terminal TB53 depending upon whether jumper W8, W9 or W7, respectively, is installed. Only one of the three jumpers should be installed at any time.

Relay K2 is activated by processor circuit board output J101 pin 29 to control an external link transmitter. when the relay is energized ground, +5 volts, or +12 volts is applied to rear panel terminal TB52 depending upon whether jumper W5, W6 or W4, respectively, is installed. Only one of the three jumpers should be installed at any time.

Optional relay K3 may be provided to control external equipment. When the relay is energized ground, +5 volts, or +12 volts is applied to rear panel terminal TB52 depending upon whether jumper W2, W3 or W1 respectively, is installed. Only on e of the three jumpers should be installed at any time. Typically, relay K3 is used by connecting a jumper between terminal E5 and one of the command or user function outputs.

6.7. MESSAGE MASTER CIRCUIT DESCRIPTION

The Message Master records voice by sampling an analog waveform and converting it into digital form using an adaptive differential pulse code modulation (ADPCM) encoding algorithm. The digitized representation of the analog signal is then stored in dynamic random access memory. During playback, digital information is read from the memory and converted back into analog form using an ADPCM decoding approach. The recovered analog signal is then filtered to remove high frequency images, called aliases, of the speech signal which are a result of the digitizing process. Speech digitizing in this manner gives good quality speech reproduction but it requires high capacity memory to store lengthy speech messages. The Message Master uses up to 8 million bits of memory and can store a total of 8 minutes of speech.

Most Message Master circuitry is contained on the MM circuit board but some circuitry is also contained on the MF circuit board. Speech samples are taken from the MF board, and the MF board also contains the waveform sampling clock and audio filters.

All Message Master digital circuitry is contained on the MM circuit board. This circuit board connects to the MF circuit board through P303. Operation of the Message Master is under control of a dedicated microprocessor (U16) on the MM board. Program memory for this microprocessor is contained in EPROM U15. Record and playback actions are initiated upon receipt of data from the Mark 4 processor board microprocessor which is routed to the MM board via P303 pins 3 and 11. This data is interpreted by the Message Master microprocessor which then initiates a record or play cycle. During record and play cycles, waveform samples are processed by the microprocessor and routed to the proper locations in dynamic RAM memory (U20 - U51).

Most of the remaining circuitry on the MM board is concerned with dynamic RAM refresh timing and memory access. Field repair of this circuitry is not recommended due to the critical timing needed to insure proper operation.

7. MR4 RECEIVER

7.1. CIRCUIT DESCRIPTION

The receiver RF input circuit consists of seven high-Q helical resonators (H1 - H7), two amplifier transistors (Q1, Q2) and associated components. The gain of this circuitry at the RF input frequency is nominally 20 dB. Superior intermodulation performance is obtained by passing input signals through two helical resonators (H1, H2) to reject out-of-band energy before amplification. Both amplifier transistors use high bias current for maximum overload capability and minimum distortion. Feedback is used to stabilize amplifier operation against temperature variations, and two sections of power supply decoupling per stage, further insure stable operation. The RF circuit output connects to the input of double balanced mixer SBL-1.

Mixer injection voltage is generated by oscillator and multiplier stages consisting of transistors Q3 through Q6 and associated components. Q3 functions as a fundamental frequency oscillator at a frequency determined by crystals Y1 through Y4. In single frequency receivers, diode CR2 is replaced by a strap to cause crystal Y2 to be selected as the frequency determining element. Y2 may be enclosed by an optional proportional crystal oven in applications at UHF frequencies where the receiver is subject to wide temperature variations. In multi-frequency receivers, oscillator frequency is determined by providing a ground on terminal E5, E8, E11, or E14 to select the associated crystal. The multiplication of ratios of Q4 through Q6 depend upon the frequency range of the receiver as follows:

Frequency Range		**Multiplier**	
in MHz	**Q4**	**Q5**	**Q6**
136 - 151	Doubler	Amplifier	Not Used
151 - 174	Tripler	Amplifier	Not Used
216 - 250	Doubler	Doubler	Not Used
420 - 512	Doubler	Doubler	Doubler

High frequency crystal are used in the MR4 receiver to minimize the number of possible image frequencies by reducing the total multiplication ratio needed to obtain the required injection frequency. To further reduce image levels, double-tuned filters are used between all multiplier stages.

The double balanced mixer output is fed to the high-IF amplifier section which consists of two transistors (Q7, Q8), eight crystal filter sections, and associated components ("B" version command receivers use four filter sections). The high-IF operates at a frequency of 21.4 MHz. Both amplifier stage outputs include broadly tuned resonant circuits (L24, C60 and L27, C66 respectively) to reject signals at frequencies beyond the skirts of the ceramic filters. Generous feedback and decoupling desensitize the amplifiers to temperature and power supply effects.

Conversion from high to low IF frequencies, amplification at the low IF frequency, limiting, and detection is done by integrated circuit U1 (squelch circuitry in U1 is not used). Frequency conversion is controlled by crystal Y5 which operates in conjunction with oscillator circuitry contained in U1. Four pole ceramic filter FL-9 operates at the low IF frequency of 455 KHz to provide additional filtering. Seven amplifier stages contained in U1 provide excellent limiting before detection. Detection is done by discriminator circuitry contained in U1 operating in conjunction with coil L28.

Wideband demodulated audio from U1 is detected by diodes CR5 and CR6 to provide the primary voltage reference for squelch operation. This detected voltage is fed to a Schmitt trigger circuit consisting of transistors Q15 and !6. Hysteresis in the Schmitt trigger produces positive squelch action by requiring a change of about 6 dB in noise level before receiver audio is switched from off to on. The detected control R84 (R84 is external to the MR4). Action of the Schmitt trigger can also be controlled by an external CTCSS decoder to disable receiver audio when no CTCSS signal is present. In applications where CTCSS operation is used, the CTCSS decoder output connects to terminal E33 to control Schmitt trigger operation.

Squelch operation is further enhanced in the MR4 by automatically adjusting the squelch threshold in accordance with received signal level. Received signal at the low IF frequency is amplified by linear amplifier U2, detected by CR13/CR14, level shifted by U3A, and linear fed to fast/slow squelch switch transistor Q14. When weak signals, less than 1 uV, are applied to the receiver transistor Q14 is turned on and applies a ground at terminal E30 to produce normal squelch action. When strong signals, greater than 1uV, are applied to the receiver transistor, Q14 is switched off. With Q14 turned off, the reference voltage at the Schmitt trigger input is increased causing the squelch to be "tightened". Tightening the squelch causes faster operation in response to signal changes and virtually eliminates squelch tail noise. Thus, the MR4 provides high squelch sensitivity to weak signals and noise free operation for strong signals.

Output from the Schmitt trigger gates the audio output of U1. When a received signal is present, audio from U1 is passed to amplifier U3C. Line audio is taken from the output of U3C at terminal E22. Audio from U3C is also routed to power amplifier U4 for driving a local speaker.

Metering circuits are provided to monitor signal strength, discriminator centering, and received signal peak deviation (metering is not provided in version "B" command receivers). All metering circuits are designed to drive 0-1 mA, 2200 Ohm panel meters. Signal strength metering is available at terminal E27 which is driven by DC amplifier transistor Q13. The signal strength meter indication is calibrated using potentiometer R66. Amplifier transistor Q11 drives terminal E20 to provide discriminator metering. Potentiometer R54 allows the discriminator meter to be set to mid-scale when registering an on-frequency signal. The discriminator meter negative terminal should be returned to ground through two series of connected diodes. Diodes CR. and CR8 are provided external to the receiver module for this purpose when the MR4 is factory installed in a repeater or rack panel. Audio is amplified, rectified by CR9/CR10, and level shifted by Q12 to drive peak deviation metering output terminal E6. Metering calibration is done using potentiometer R64.

Switched outputs indicating the presence of received signal are available from Q9 or Q10. Q10 provides a ground at terminal E16 when received signal is present and an open when no signal is present. An inverted output can be obtained by connecting a strap from terminal E16 to terminal E17 and taking the output from terminal E15.

7.2. INSTALLATION

The following describes connections which may be made to MR4 receivers furnished in modular form. Receivers furnished in repeaters are completely connected and require no field installation.

1. Connect to receiver terminals E34 (positive) and E35 (ground) from a DC power source having the following characteristics:

Normal Voltage	12 VDC
Regulation	+/- 5%
Ripple	< 100 mV
Current	250 mA

CAUTION: The MR4 uses negative ground and must be powered from a negative ground or floating power supply. DO NOT connect a positive ground power source to the receiver.

2. To obtain a fixed-level audio output (line audio) connect to terminals E22 (signal) and E23 (ground). This output provides a level of approximately 0.4 vrms and a source impedance of 1000 Ohms. Shielded wire should be used for making this connection.

3. To obtain power amplifier audio output for driving a loudspeaker, connect to terminals E24 (signal) and E25 (ground). This output provides a fixed level of approximately 3 vrms. An external 100 Ohm potentiometer may be connected between this output and the loudspeaker, as shown in the receiver schematic drawing, to adjust loudspeaker volume.

4. Connect a strap from terminal E28 to terminal E29. (Input terminal E28 is used for remote squelch control in repeater applications and is not normally used in other applications.

5. Connect a 50 Kohm potentiometer to terminals E30, E31 and E32, as shown in the receiver schematic diagram. This potentiometer is used for setting the receiver squelch threshold. Shielded wire should be used for making these connections.

6. To obtain a logic output signal indicating the presence of received signal connect to terminal E16. Output E16 provides a ground when received signal is present and an open when no received signal is present.

If an inverted logic signal is desired, connect a strap from terminal E16 to terminal E17 and take the output from terminal E15. Terminal E15 provides an open when received signal is present and a ground when no received signal is present.

7. If CTCSS operation is to be used, connect from terminals E18 (signal) and E19 (ground) to the CTCSS decoder input. Connect from the CTCSS decoder output to terminal E33. The logic signal connected to terminal E33 should provide a ground when a CTCSS signal is detected by the decoder and an open when no CTCSS signal is detected.

8. If metering is to be used, connect 0-1 mA meters having internal resistances of 2200 Ohms to the following terminals:

	Meter + Terminal	**Meter - Terminal**
Signal Strength	E27	Ground
Peak Deviation	E26	Ground
Discriminator	E20	Ground through series connected diodes

9. Adjust the signal strength meter by applying a strong (10,000 uV) signal to the receiver input and setting potentiometer R66 until compression begins (further rotation of the potentiometer causes no further change in the meter indication).

Set the discriminator meter by applying an on frequency signal to the receiver and adjusting potentiometer R54 for a center scale meter reading.

Set the peak deviation meter by applying a signal having 5KHz deviation to the receiver and adjusting potentiometer R64 for a center scale reading. Meter indication is directly proportional to deviation, i.e., 0.5 mA indication corresponds to 5 KHz deviation.

7.3. ALIGNMENT

All MR4 receivers are factory aligned prior to shipment and require no initial alignment. The information given below is intended to aid re-adjustment following component replacement; it is not a step-by-step alignment procedure. Perform only the adjustments pertaining to the receiver section having the replaced component.

1. The RF section may be aligned by applying a signal to the receiver input and connecting a selective RF monitor to terminal E1. Adjust helical resonator capacitors and coupling capacitors C4 and C15 to obtain a maximum indication on the monitor. Some interaction will be found between resonator H2 and capacitor C4 and between resonator H6 and capacitor C15, so these adjustment should be repeated as necessary until no further increase in gain is obtained.

As adjustments are made, reduce the applied signal level to avoid saturating the amplifier transistors or the RF meter. When properly aligned, the RF section will exhibit a gain of approximately 20 dB.

2. If amplifier resonant circuits have a low Q, inductors L24 and L27 should not require adjustment in the field. The IF frequency can be set by loosely coupling a frequency counter to U1 terminal 1 and adjusting C107 to obtain a reading of 21.855 MHz.

3. The discriminator may be adjusted by applying an on-frequency, deviated signal to the receiver input and adjusting L28 for maximum output audio. The adjustment of L28 is not critical and will be found to have a broad maximum.

4. Receiver frequency may be set by applying an on-frequency signal to the receiver and adjusting capacitor C24 to obtain a center scale reading on the discriminator meter. In multi-frequency receivers, apply a ground to terminals E14, E11 E5, and E8 in turn to select the appropriate crystal and adjust capacitors C28, C26, C22 and C24, respectively.

5. Multiplier stages may be adjusted by connecting a selective RF monitor to test point TP4 and adjusting the tuning components (inductors and capacitors) for a maximum indication on the monitor. When the multipliers are operating properly, the injection voltage at TP4 should be greater than 300 mV.

7.4. MR4 RECEIVER PARTS LIST - 1 REV A

CAPACITORS

C 1	Part of Helical Resonator
C 2	Part of Helical Resonator
C 3	Part of Helical Resonator
C 4	5 - 25 pf Trim Cap
C 5	.001 Disc
C 6	.001 Disc
C 7	.001 Disc
C 8	.001 Disc
C 9	Part of Helical Resonator
C 10	Part of Helical Resonator
C 11	part of Helical Resonator
C 12	Part of Helical Resonator
C 13	Part of Helical Resonator
C 14	Part of Helical Resonator
C 15	5 - 25 pf Trim Cap
C 16	.001 Disc
C 17	.001 Disc
C 18	.001 Disc
C 19	.001 Disc
C 20	Part of Helical Resonator
C 21	.001 Disc
C 22	5 - 25 pf Trim Cap
C 23	.001 Disc
C 24	5 - 25 pf Trim Cap
C 25	.001 Disc
C 26	5 - 25 pf Trim Cap
C 27	.001 Disc
C 28	5 - 25 pf Trim Cap
C 29	.001 Disc
C 30	100 pf Silver Mica
C 31	4.7Mfd 126v.
C 32	.01 Disc
C 33	F.S.
	8 pf SM (135 - 174 MHz)
	8 pf SM (420 - 512 MHz)
	12 pf SM (216 - 250 MHz)
C 34	F.S.
	56 pf NPO (135 - 151 MHz)
	47 pf NPO (151 - 158 MHz)
	36 pf NPO (158 - 174 MHz)
	39 pf NPO (215 - 250 MHz)
	20 pf NPO (420 - 512 MHz)
C 35	.001 Disc
C 36	.001 Disc
C 37	F.S. 1 pf tubular

RESISTORS

R 1	1K
R 2	1.8K
R 3	220 Ohm with F.Bead
R 4	100 Ohm
R 5	1K
R 6	1.8K
R 7	220 Ohms with F.Bead
R 8	100 Ohm
R 9	10K *
R 10	10K *
R 11	10K *
R 12	10K *
R 13	15K
R 14	3.3 K
R 15	220 Ohm
R 16	39 Ohm with F.Bead
R 17	1.5K
R 18	6.8K
R 19	1.8K
R 20	220 Ohm
R 21	47 Ohm with F.Bead
R 22	6.8K
R 23	1.8K
R 24	220 Ohm
R 25	47 Ohm with F.Bead
R 26	6.8K
R 27	1.8K
R 28	220 Ohm
R 29	47 Ohm with F.Bead
R 30	1K
R 31	2.7K
R 32	1K
R 33	47 Ohm with F.Bead
R 34	75 Ohm
R 35	2K
R 36	2K
R 37	47 Ohm with F.Bead
R 38	1K
R 39	2.7K
R 40	1 K
R 41	75 Ohm
R 42	2.2K
R 43	100K
R 44	4.7K
R 45	1K

CAPACITORS

C 38	F.S.
	10 pf NPO (135 - 151 MHz)
	12 pf NPO (151 - 158 MHz)
	10 pf NPO (158 - 250 MHz)
	15 pf NPO (420- 512 MHz)
C 39	F.S.
	10 pf NPO (135 - 151 MHz)
	10 pf NPO (151 - 158 MHz)
	8 pf NPO (158 - 174 MHz)
	12 pf NPO (215 - 512 MHz)
C 40	1 pf (5 pf 220 MHz only)
C 41	.001 Disc
C 42	.01 Disc
C 43	F.S. 1 pf tubular
C 44	F.S.
	22 pf (135 - 151 MHz)
	(151 - 158 MHz)
	(158 - 174 MHz)
	(215 - 250 MHz)
	(420 - 512 MHz)
C 45	6.8 NPO Disc
C 46	F.S. 1 pf
C 47	.001 Disc
C 48	.01 Disc **
C 49	3 -15 pf Trim Cap **
C 50	1 pf tubular
C 51	3 -15 pf Trim Cap **
C 52	3 -15 pf Trim Cap **
C 53	3 -15 pf Trim Cap **
C 54	1 pf tubular **
C 55	33 pf NPO
C 56	10 pf NPO
C 57	27 pf NPO
C 58	.01 Disc
C 59	.01 Disc
C 60	33 pf NPO
C 61	.01 Disc
C 62	10 pf NPO
C 63	.01 Disc
C 64	.01 Disc
C 65	.001 Disc
C 66	33 pf NPO
C 67	.01 Disc
C 68	100 pf S.M.
C 69	17 pf S.M.
C 70	.01 Disc
C 71	100 pf NPO
C 72	.1 Disc

RESISTORS

R 46	47K
R 47	4.7K
R 48	390K
R 49	10K
R 50	20K
R 51	7.5K
R 52	4.7K
R 53	390 Ohm
R 54	10K Pot
R 55	20K
R 56	47K
R 57	20K
R 58	1K
R 59	200K
R 60	39 K F.S.
R 61	470K
R 62	1 Meg
R 63	470K
R 65	1 Meg
R 66	5K Pot
R 67	22 meg
R 68	150 Ohm with F.Bead
R 69	22 Meg
R 70	3.9K
R 71	2.2K
R 72	470K
R 73	10K
R 74	1 Meg
R 75	10K
R 76	20K
R 77	4.7K
R 78	100K
R 79	10K
R 80	10K
R 81	10K
R 82	150 Ohm
R 83	3.9K
R 84	50K pot (Squelch)

C 73	.1 Disc
C 74	100 pf S.M.
C 75	100 pf NPO
C 76	100 pf NPO
C 77	4.7 MFD 16 v.
C 78	4.7 MFD 16v.
C 79	.047 Mylar
C 80	.01 Mylar
C 81	2.2 MFD
C 82	2.2 MFD 16 v.
C 83	4.7 MFD 16 v.
C 84	220 MFD 35 v.
C 85	.
C 86	33 MFD 35 v.
C 87	.1 MFD Disc
C 88	220 MFD 35 v.
C 89	.1 MFD Disc
C 90	.1 MFD Disc
C 91	.1 MFD Disc
C 92	100 pf NPO
C 93	100 pf NPO
C 94	4.7 MFD 16v.
C 95	100 pf NPO
C 96	100 pf NPO
C 97	2.2 MFD 16v.
C 98	.1 MFD Disc
C 99	.1 MFD Disc
C 100	.1 MFD Disc
C 101	.1 MFD Disc
C 102	2.2 MFD 16 v.
C 103	33 MFD 35 v.
C 104	.1 MFD Disc
C 105	.01 Mylar
C 106	
C 107	5 - 25 pf Trim Cap

CRYSTALS AND FILTERS

Y1 - Y4

136 - 151 Fx = (FO-21.4Mhz)/2
151 - 174 Fx = (FO-21.4Mhz)/2
216 - 250 Fx = (FO-21.4Mhz)/4
420 - 512 Fx = (FO-21.4MHz)/8
Parallel resonant, third overtone, resistance 30 Ohm max. 12 pf load capacity, HC-25/U case

SEMI-CONDUCTOR DEVICES

Q 1	MRF 901
Q 2	MRF 901
Q 3	2N4123
Q 4	2N3563
Q 5	2N3563
Q 6	2N5179
Q 7	2N3563
Q 8	2N3563
Q 9	2N4123
Q 10	2N4123
Q 11	2N4123
Q 12	2N4123
Q 13	2N4123
Q 14	2N4123
Q 15	2N4123
Q 16	2N4123

U 1	MC 3359
U 2	CD4007
U 3	LM3900
U 4	LM380
U 5	7808

CR 1	1N1448 *
CR 2	1N1448 *
CR 3	1N1448 *
CR 4	1N1448 *
CR 5-14	1N1448

COILS AND INDUCTORS

L1	Part of Helical Resonator
L2	Part of Helical Resonator
L3	Part of Helical Resonator
L4	6T2518 (135 - 174 MHz)
L5	Part of Helical Resonator
L6	Part of Helical Resonator
L7	Part of Helical Resonator
L8	Part of Helical Resonator
L9	Part of Helical Resonator
L10	6T2528 (135 - 174 MHz) 5T2518 (216 - 250 MHz)
L11	5T2518
L12	Part of Helical Resonator
L13	Part of Helical Resonator

8. MARK 4 VERSATILE COMPUTER INTERFACE

The Versatile Computer Interface (VCI) option gives control operators the ability to view repeater status at a glance and to execute commands with a powerful full-screen color menu driven program running on a remote computer. Using the VCI option control operations can visually examine and change:

- operating conditions such as timeouts and inhibits,
- autodial phone numbers,
- user autodial callsigns and phone numbers,
- CW and Multifax voice messages

The VCI option consists of the following:

- Mark 4 I/O Expansion Board with associated cables and RS-232 connector,
- Mark 4 processor board EEPROM update, and
- Diskette containing control programs for use in a remote computer.

Mark 4 repeaters originally shipped from the factory with the VCI option have the I/O expansion board and EEPROM update installed prior to shipment. The VCI option is also available as a kit for field installation in Mark 4 repeaters. Installation instructions are included with the kit.

8.1. APPLICATION

In normal applications, connection between the Mark 4 VCI and the serial port of a remote computer is made via a data link consisting of modems operating over a telephone line as shown in figure 1. Connect is initiated by establishing a telephone call from the computer to the Mark 4. Therefore, the modem connected to the computer should be set to "Originate" and the modem connected to the Mark 4 should be set to "Auto-Answer". The VCI control program, running in the remote computer, allows the computer to originate calls and communicate with the VCI.

Other data equipment may also be used to establish connection between the Mark 4 VCI and the computer serial port. To obtain proper operation it is essential that all equipment used in making the connection have compatible electrical characteristics and data protocols. Characteristics and protocols of the VCI are given below in the "Data Interface" section. The VCI may also be connected directly to the computer serial port using a "Null Modem" connector.

8.2. VCI CONTROL PROGRAMS

VCI control programs are contained on a 5-1/4 inch diskette for use in an IBM PC-XT or PC-AT compatible computer equipped with CGA video. The two executable programs contained on the diskette are VCI.EXE and SETUP.EXE. The remaining files contain data used by the two executable programs and are not intended to be run directly.

When using the VCI program, the user may elect to save phone number and callsign data to the diskette. If the user chooses to do so then three new files, AD.TXT, XAD1.TXT, and XADS.TXT will be created. These files will contain phone number and callsign information in text form so they may be read by standard text editing programs to create printed reports.

8.2.1. VCI.EXE

This program contains the full screen color menu driven routines for communicating with the Mark 4 VCI. The program is run by inserting the diskette into the remote computer disk drive and typing VCI in response to the MS-DOS prompt.

The program includes modem dialing capability for accessing the VCI interface remotely through modems via a telephone line. However, the program also allows modem dialing to be bypassed for those applications where the computer is directly connected to the Mark 4.

When connection is established with the Mark 4, the program will request the user to log in by entering the repeater password. After log in the user will be presented with the main menu of command categories.

Program Mode on/off and Enter User ID Mode on/off selection is done automatically by the VCI program. Therefore, it is NOT necessary to enter these access codes when entering commands with the VCI program.

Log in is maintained by the VCI on a 2-minute usage sensitive basis. That is, the VCI will automatically log off if no command is entered during a 2 minute period. However, automatic log off is intended as protection in the event of an accidental failure of the data link connection (telephone call) and should not be used as the normal way to terminate a command session. When a command session is completed, the VCI program should be exited by selecting QUIT (log off) from the main menu. This will insure that the Program and Enter User ID modes are returned to the off state.

On-line help information is available in each segment of the VCI program and can be obtained by pressing function key <F1>. The help screens show which keys to use, what information is being requested, and examples of typical entries.

Further information about the VCI.EXE program is given in the "VCI Control Program Operation" section below.

8.2.2. SETUP.EXE

This program allows certain characteristics of the VCI program and computer serial interface to be tailored for specific applications. The program can be run by typing SETUP in response to the MS-DOS prompt.

The characteristics which can be tailored by this program are:

1. **Computer Serial Port Data Rate** (factory set value is 1200 bps)

CAUTION: For successful operation the serial port data rate must agree with the data rates of the modems and VCI.

2. **COM Port Assignment** (factory set value is COM1)

The serial port may be assigned to ports COM1 or COM2. See your computer manual for further information on COM port assignments.

3. **Repeater Response Wait Time** (factory set to 5 seconds)

   After commands are sent from the computer to the Mark 4, the VCI program waits for a response from the Mark 4. If the wait time is exceeded, the VCI program informs the user that no response has been received and lets the user decide whether to continue waiting.

8.2.3. Operation without the VCI Control Program

The VCI may be accessed from a computer or terminal to enter commands into a Mark 4 without using the VCI control program. When used in this manner, the VCI will initially respond to any input with the message *VCI Activated* and prompt >. Mark 4 access codes may then be entered as if from a Touchtone pad. At the end of a command session, terminate access by entering the VCI logoff command, *QUIT*.

8.2.4. New Commands

Several new commands are provided for controlling the operation of VCI features. With one exception, these commands may be entered either from a Touchtone pad or from the VCI itself. The Mark 4 must be in the Program Mode to accept these commands from a Touchtone pad.

8.2.5. VCI Data Rate Commands

These commands set the bit rated used by the Mark 4 on the VCI data link.

> **Caution:** For successful operation, the data rate used by the Mark 4 must match the data rates used by the remote computer and modems. See the information below on "Changing Data Rate" before using these commands.

The commands and corresponding data rates are as follows:

Access Code	Data Rate	
9920	300 bps	
9921	1200 bps	(Factory set value)
9922	2400 bps	
9923	4800 bps	
9924	9600 bps	

8.2.5.1. VCI Disable

Access Code	Action
9940	Inhibits VCI Feature
9941	Enables VCI Feature (Factory set value)

The inhibit command (9940) may be entered either from a Touchtone pad or through the VCI itself. Clearly, the enable command (9941) will only be accepted when entered from a Touchtone pad.

CAUTION: The inhibit command prevents the mark 4 from responding to any inputs from the VCI data link but it may not control the operation of a modem connected to the VCI. Therefore, an auto-answer modem connected to the VCI may still respond to an incoming call when the VCI feature is disabled.

8.2.5.2. Priority

Access Code	Action
9946	Gives priority to repeater (Factory set value)
9947	Gives priority to VCI

VCI access requires action by the Mark 4 main processor which conflicts with the action the processor must take to maintain normal operation. During periods of heavy activity, the conflicts could result in sluggish repeater operation or VCI data link errors. These commands give control operators a degree of freedom for resolving such conflicts.

If repeater priority is selected, VCI action is temporarily suspended when repeater action is changing rapidly. If VCI priority is selected, repeater action may be temporarily delayed when VCI commands are entered.

Conflict management is only a consideration if VCI access is done during periods of heavy repeater use. Even under these conditions, a skilled control operator can avoid conflicts by listening to repeater activity while using the VCI. In any case, conflicts can be avoided by using VCI access when the repeater is idle.

8.2.6. Changes to Mark 4 Commands

Mark 4 commands (9201 - 9205) for establishing parameter set start times have been modified to require that a # be used when the command is entered from a Touchtone pad. This change makes these commands similar in operation to other commands.

Example: To establish parameter set 1 start time as 6:30 AM each day

Enter: 9201 0 06 30 #

Note: The # is used only when the command is entered from a touchtone pad, and NOT when the command is entered using the VCI control program.

8.2.7. Data Interface

The VCI operates as a Data Terminal Equipment (DTE) in accordance with the EIA RS-232 interface specification. The following RS-232 compatible signals are provided.

Signal	DB-25 Connector Pin
Received Data (RD)	3
Transmit Data (TD)	2
Request to Send (RTS)	4
Ground (GND)	1, 16

Data link protocol parameters used by the VCI are as follows:

8 bits, no parity, 1-stop bit

The remote computer serial port is also set to these data link parameters by the VCI control program. The VCI program does not use any RS-232 interface hardware control signals.

Both the VCI and the VCI control programs are shipped from the factory set for 1200 bps operation. The data rates may be changed, if desired, as described in the following section.

8.2.8. Changing Data Rates

It is essential that all equipment used in the data link operate at the same data rate. Both the VCI and VCI control programs are shipped from the factory set to 1200 bps operation so the rates need not be changed if the VCI is used with 1200 bps modems. The VCI and VCI control program data rates may be changed for use with modems operating at other data rates. Changes may be made as follows:

First, using a Touchtone pad, place the Mark 4 repeater into the program mode. Then enter the appropriate VCI rate command (9920 - 9924) as described in the "New Commands" section above.

Second, execute the **SETUP** program on the VCI control programs diskette to change the serial port data rate.

8.2.9. VCI Control Program Operation

The VCI control program consists of five sub-programs: status, autodial, extended autodial group 1, extended autodial group 2, and messages. The particular sub-program to be run is determined by selection from the main menu. When a selection is made, repeater data is downloaded to the computer for display. The time required for downloading is determined both by the quantity of data and the data link speed. For example, callsigns and phone numbers for 100 repeater users are downloaded when an extended autodial subprogram is selected. At a data link rate of 1200 bps, the download takes approximately 10 seconds. Messages shown on the computer screen indicate the progress is downloading.

Information entered from the computer keyboard is formatted by the VCI program into Mark 4 commands and transmitted to the VCI on the data link. The VCI control program then waits for the Mark 4 to execute the command and send a response message. If the response message indicates that the Mark 4 has successfully executed the command, then the computer screen is updated to show the new information. If the Mark 4 cannot execute the command, then an exception message is displayed on the computer screen. Exception messages may also be generated by the VCI control program itself if it determines that a command request is invalid.

Commands may fail to be executed because: a) they were entered incorrectly; or, (b) they were corrupted due to errors on the data link. If a command fails to execute refer to the Mark 4 manual to verify whether valid command information is being entered. For example, message commands will fail to execute if words are used which are not in the Mark 4 MultiFax vocabulary. In this case, refer to the word list. If the command was indeed entered correctly, then try re-entering the command. Successful execution the second time indicates that the initial failure was likely due to a link error. Data link errors are monitored by the VCI and a "Data Link Errors" message will be displayed if a high error rate condition occurs. Data error problems are generally due to telephone line noise so it may be possible to eliminate the error condition by re-originating the telephone connection.

In rare cases, highly abnormal events can cause conditions which cannot be overcome by the VCI control program. Should this occur, the VCI control program will terminate and display a Fatal Error message indicating the nature of the problem.

Connections between Mark 4 CR and modem

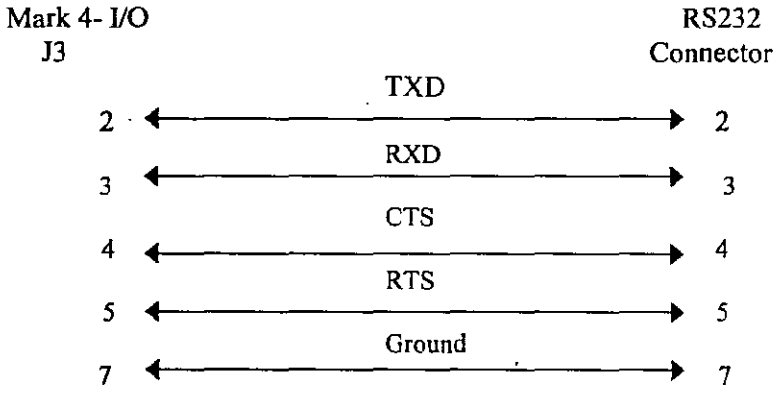

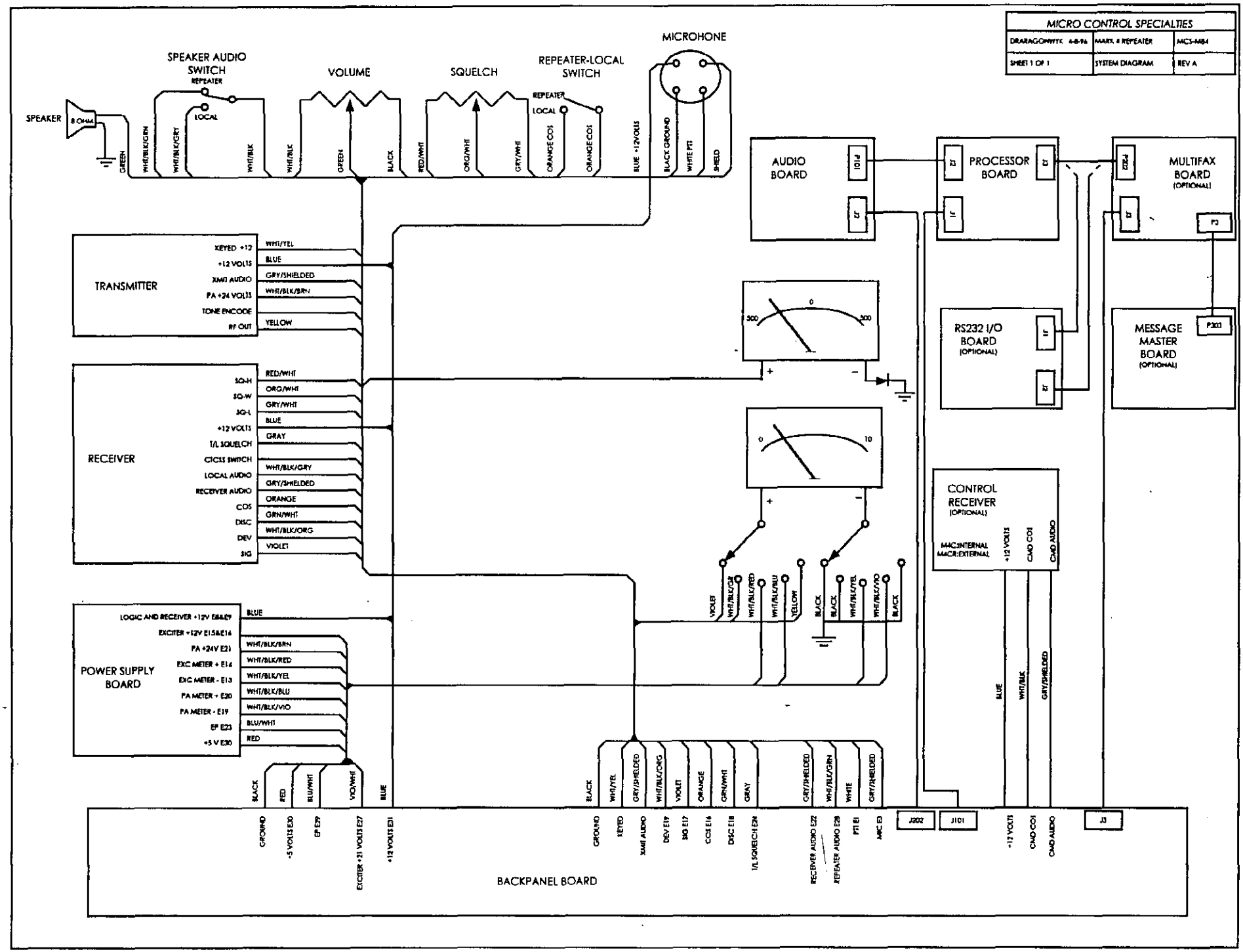
MICRO CONTROL SPECIALTIES
DRARAGONWYK 6-8-96
MARK 4 REPEATER
MCS-MB4
SHEET 1 OF 1
SYSTEM DIAGRAM
REV A
SPEAKER
8 OHM
SPEAKER AUDIO SWITCH
REPEATER
LOCAL
VOLUME
SQUELCH
REPEATER-LOCAL SWITCH
REPEATER
LOCAL
MICROHONE
GREEN
WHT/BLK/GRN
WHT/BLK/GRY
WHT/BLK
WHT/BLK
GREEN
BLACK
RED/WHT
ORG/WHT
GRY/WHT
ORANGE COS
ORANGE COS
BLUE +12VOLTS
BLACK GROUND
WHITE PTT
SHIELD
AUDIO BOARD
J101
J2
J2
J1
PROCESSOR BOARD
J2
J1
J202
MULTIFAX BOARD
(OPTIONAL)
J2
J3
P3
TRANSMITTER
KEYED +12
+12 VOLTS
XMIT AUDIO
PA +24 VOLTS
TONE ENCODE
RF OUT
WHT/YEL
BLUE
GRY/SHIELDED
WHT/BLK/BRN
YELLOW
RECEIVER
SQ-H
SQ-W
SQ-L
+12 VOLTS
T/L SQUELCH
CTCSS SWITCH
LOCAL AUDIO
RECEIVER AUDIO
COS
DISC
DEV
SIG
RED/WHT
ORG/WHT
GRY/WHT
BLUE
GRAY
WHT/BLK/GRY
GRY/SHIELDED
ORANGE
GRN/WHT
WHT/BLK/ORG
VIOLET
RS232 I/O BOARD
(OPTIONAL)
J1
J2
MESSAGE MASTER BOARD
(OPTIONAL)
P303
CONTROL RECEIVER
(OPTIONAL)
MAC:INTERNAL
MACR:EXTERNAL
+12 VOLTS
CMD COS
CMD AUDIO
POWER SUPPLY BOARD
LOGIC AND RECEIVER +12V E8&E9
EXCITER +12V E15&E16
PA +24V E21
EXC METER + E14
EXC METER - E13
PA METER + E20
PA METER - E19
EF E23
+5 V E30
BLUE
WHT/BLK/BRN
WHT/BLK/RED
WHT/BLK/YEL
WHT/BLK/BLU
WHT/BLK/VIO
BLU/WHT
RED
BACKPANEL BOARD
GROUND
-5 VOLTS E30
EF E29
EXCITER +21 VOLTS E27
+12 VOLTS E31
GROUND
KEYED
XMIT AUDIO
DEV E19
SIG E17
CCS E16
DISC E18
T/L SQUELCH E24
RECEIVER AUDIO E22
REPEATER AUDIO E28
PTT E1
MIC E3
J202
J101
+12 VOLTS
CMD COS
CMD AUDIO
J3

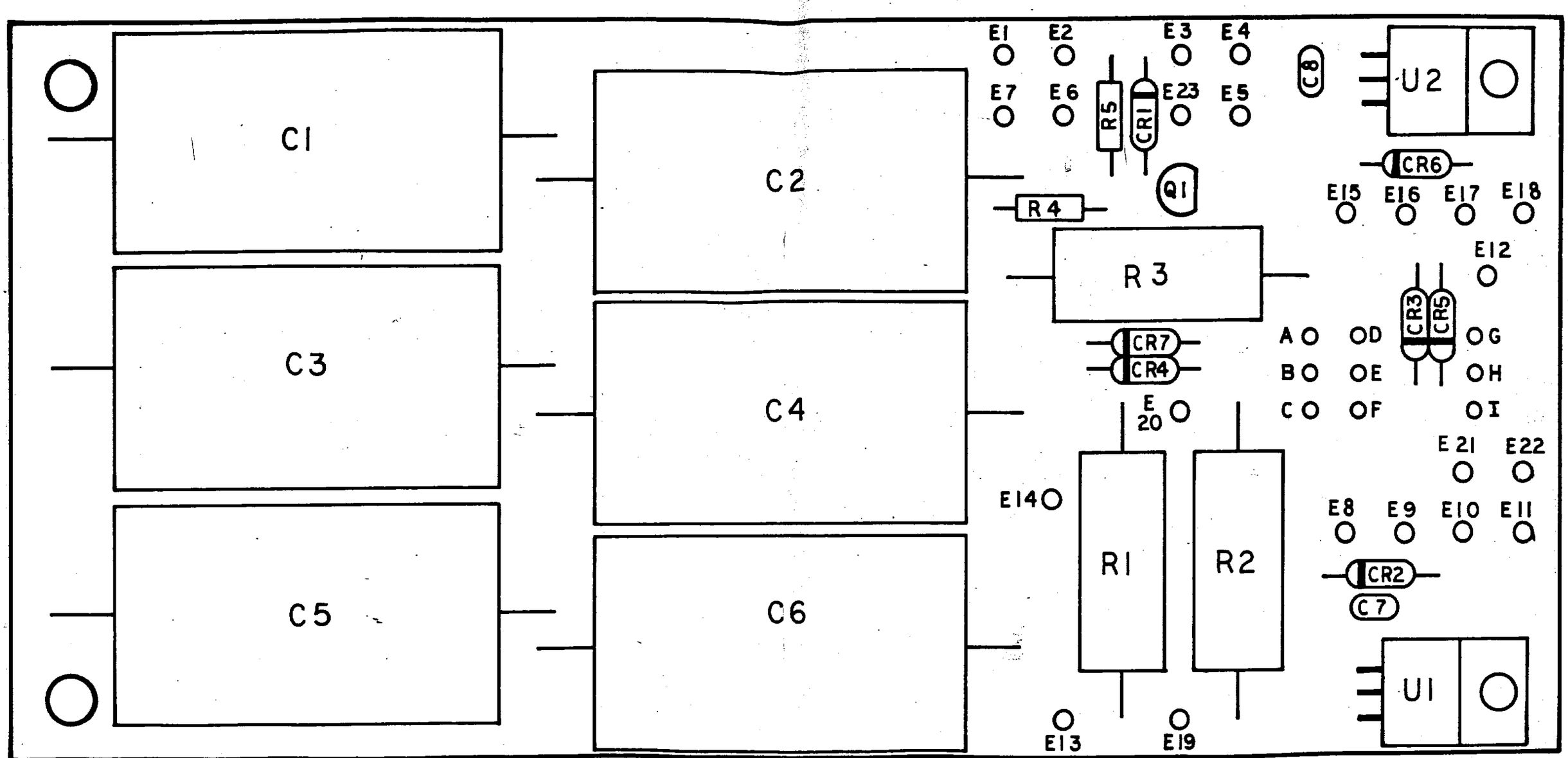

POWER SUPPLY BOARD LAYOUT

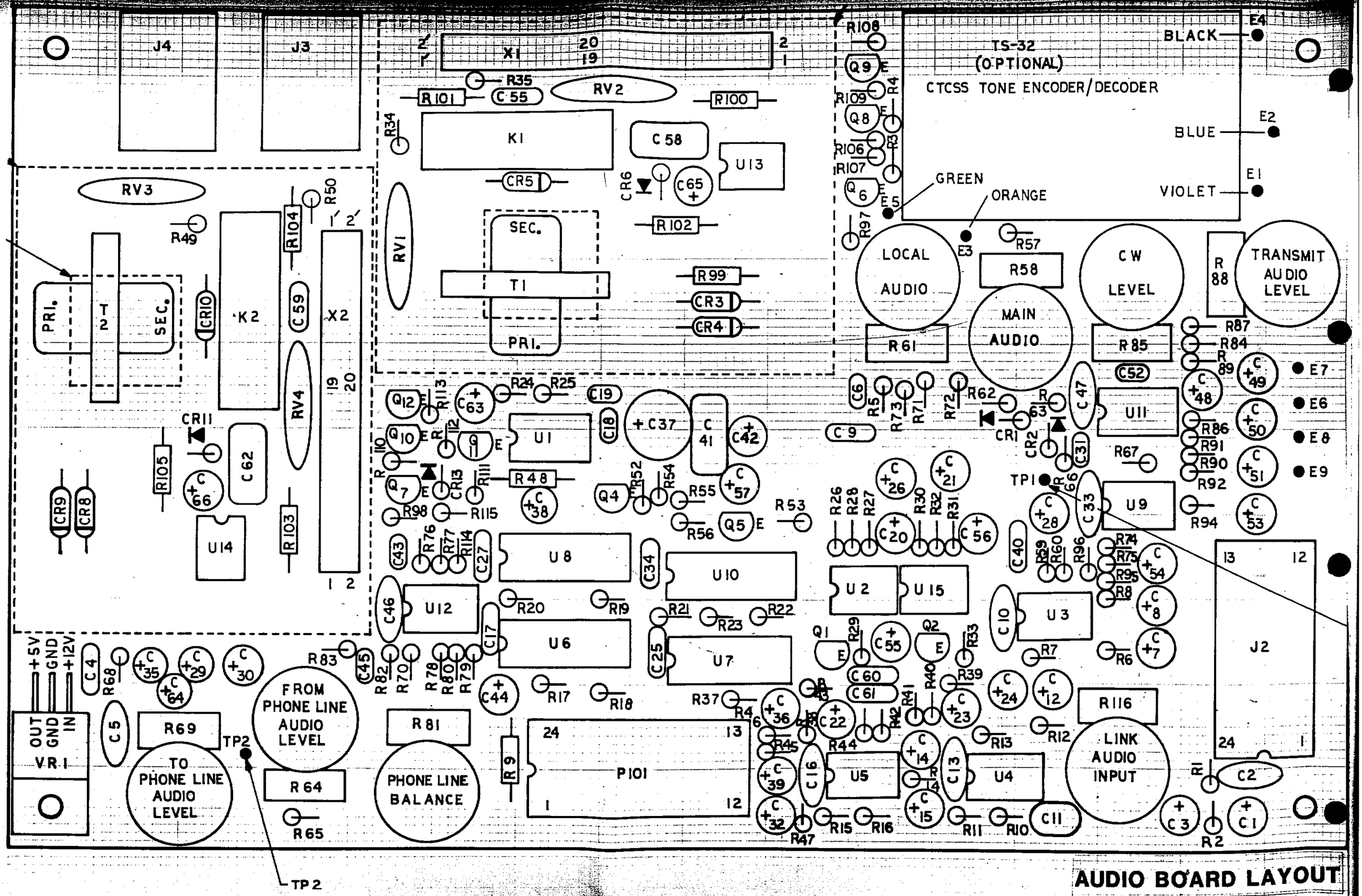

AUDIO BOARD LAYOUT

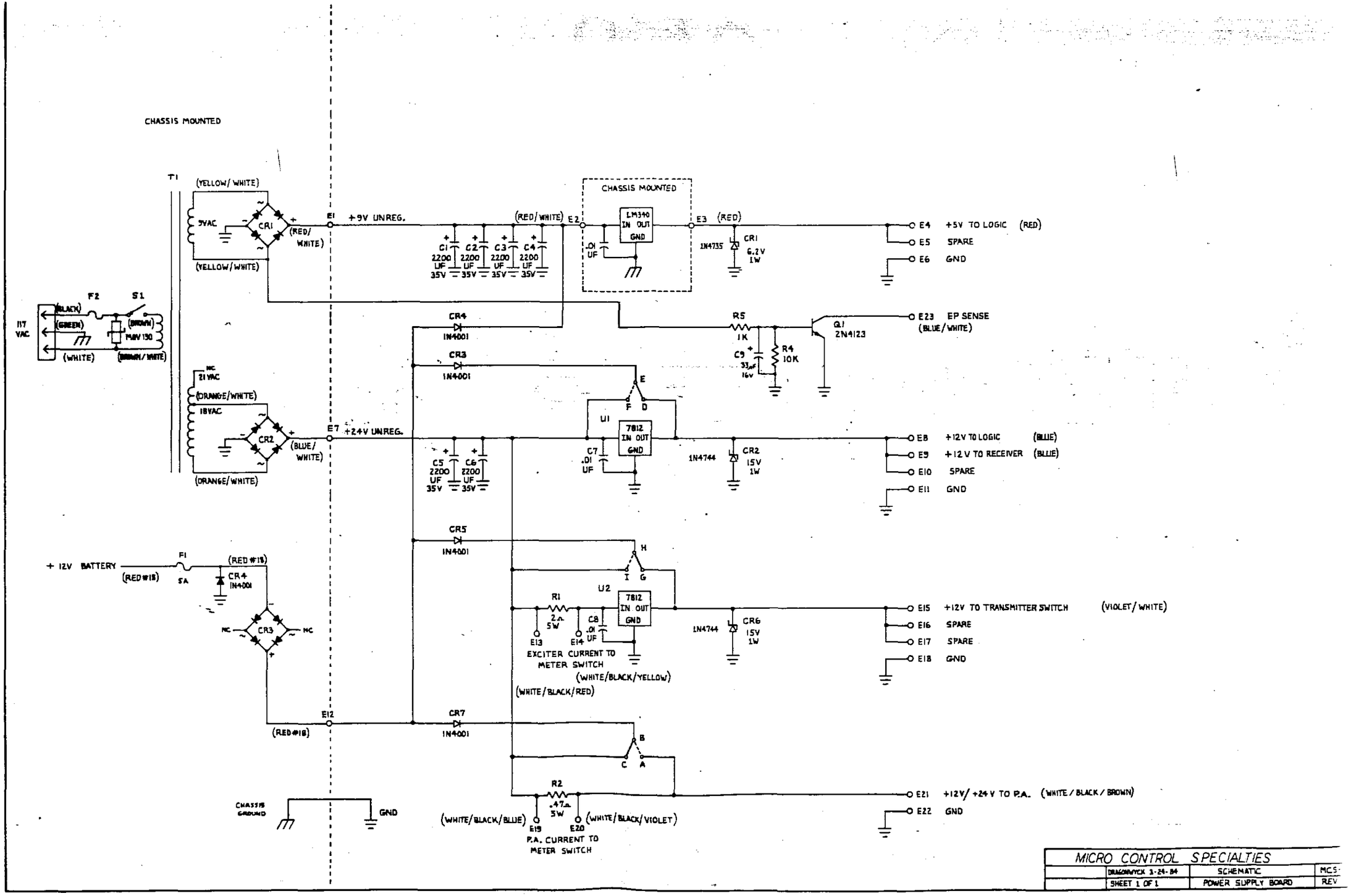

MICRO CONTROL SPECIALTIES			
	DRAGONWYCK 3-24-84	SCHEMATIC	MCS-1
	SHEET 1 OF 1	POWER SUPPLY BOARD	REV

Part of Modification made to allow operation with a voter. Modified 9/1/2003 L. MACKLIN

ECO #	REV	DESCRIPTION	DRAWN	CHKD	APPV
~	A1	UPDATED	B.D.		
~	B	REVISED	B.D.		
~	C	REVISED	D.D.		

TS-32 CTCSS TONE ENCODER/ DECODER

FCC REGISTERED VERSION (OPTIONAL)

FCC REGISTERED VERSION (OPTIONAL)

MICRO CONTROL SPECIALTIES			
DRAWN NICK 7-31-03	SCHEMATIC	MCS-M4A	
SHEET 1 OF 1	AUDIO P.C. BOARD	REV C	

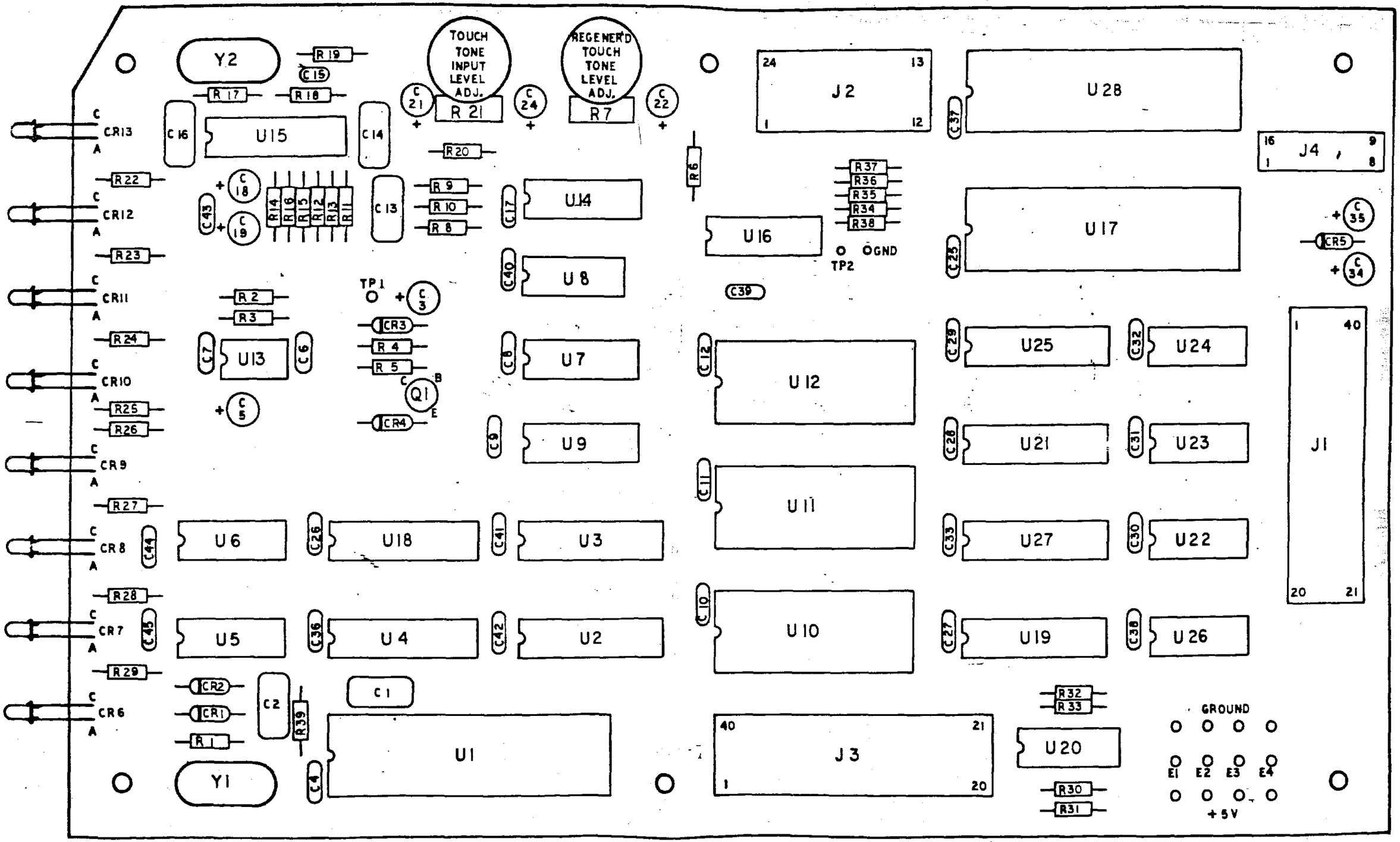

PROCESSOR BOARD LAYOUT

MICRO CONTROL SPECIALTIES
23 ELM PARK GROVELAND,MASS. 01834

SIZE	NONE	DRAWING NO.	
DATE	APRIL 16,1983	DRAWN BY	DYNACOMPUTER DESIGN

SHEET	OF 1	REV	B
DRAWING NUMBER		MC3-A4P	

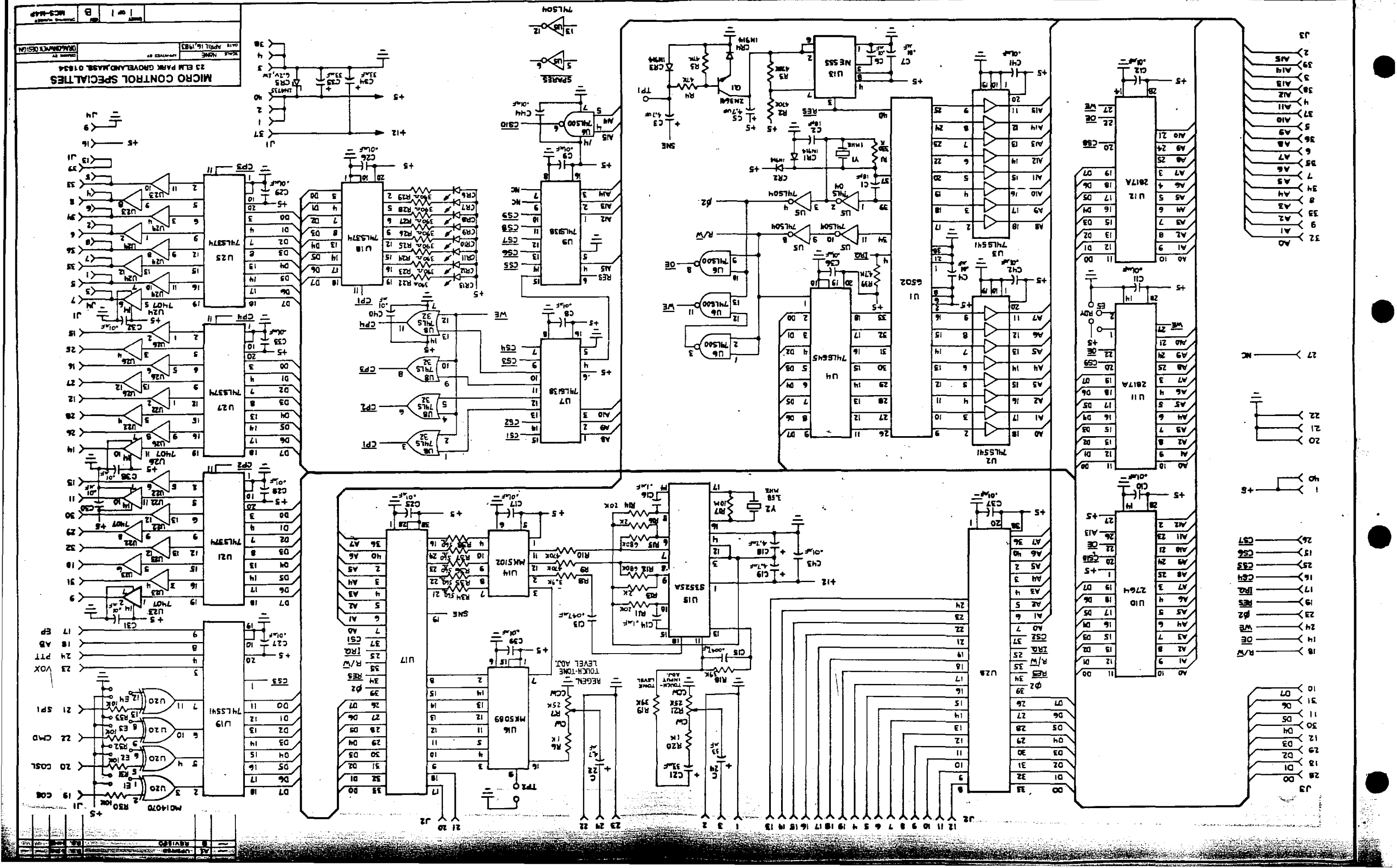

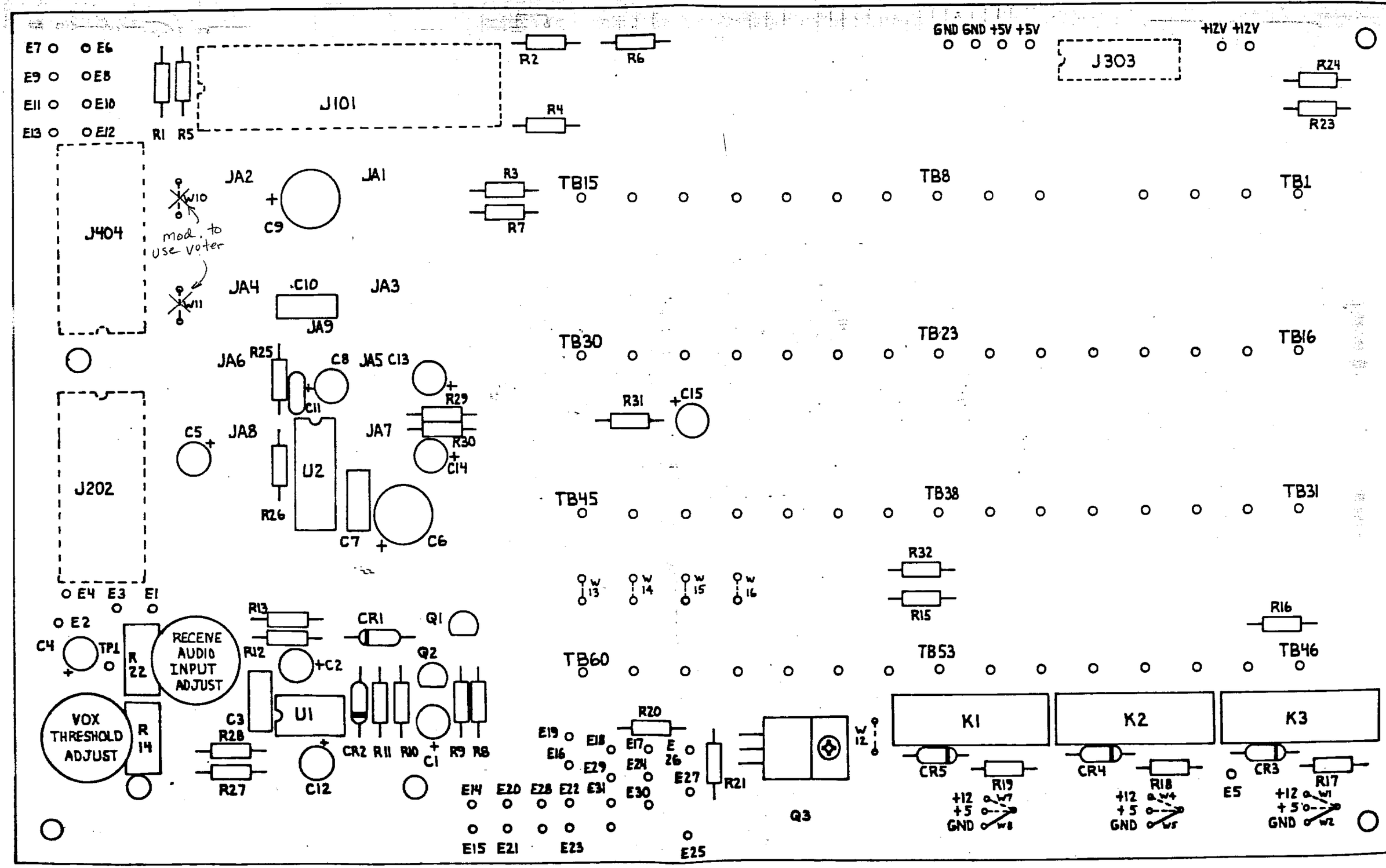

BACKPLANE BOARD LAYOUT

REV	DESCRIPTION	APP'D	DATE
A	Released	-	8/1/83
A1	Revised	-	10/30/8
A2	Revised	-	11/02/8
A3	Revised and released	WRD	11/09/

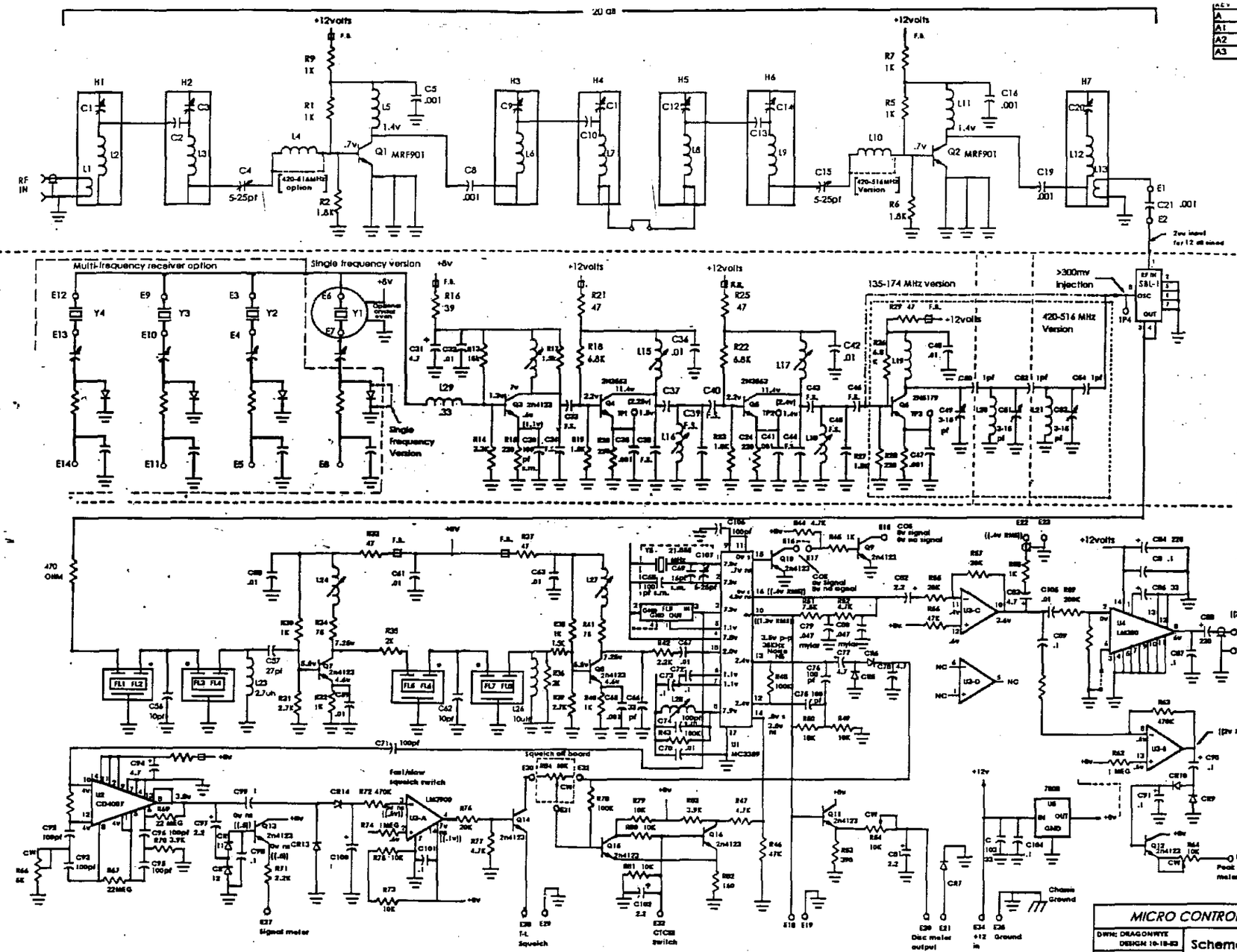

NOTES:

1. Voltage measurements taken on a 15 ohm input DVM.
2. Voltages measured with:
   s = RF signal present
   ns = No rf signal present
   ( ) = crystal installed
   [[ ]] = 100 microvolt RF input with a 1 K. signal deviated +/- 5 Khz.
3. Unless otherwise specified, all diodes 1N4148.
4. H1-H7 are helical resonators
5. All resistors are in ohms unless specifie
   All capacitors are in microfarads unles specified.
   All Chokes are microhenry unless spec

J303 to Multifax Board

J202 to Audio Board J-2

Audio To Voter JA1

Jumper Required if not using Voter

Audio from Voter JA9

J101 to CPU Board J-1

J404 not connected

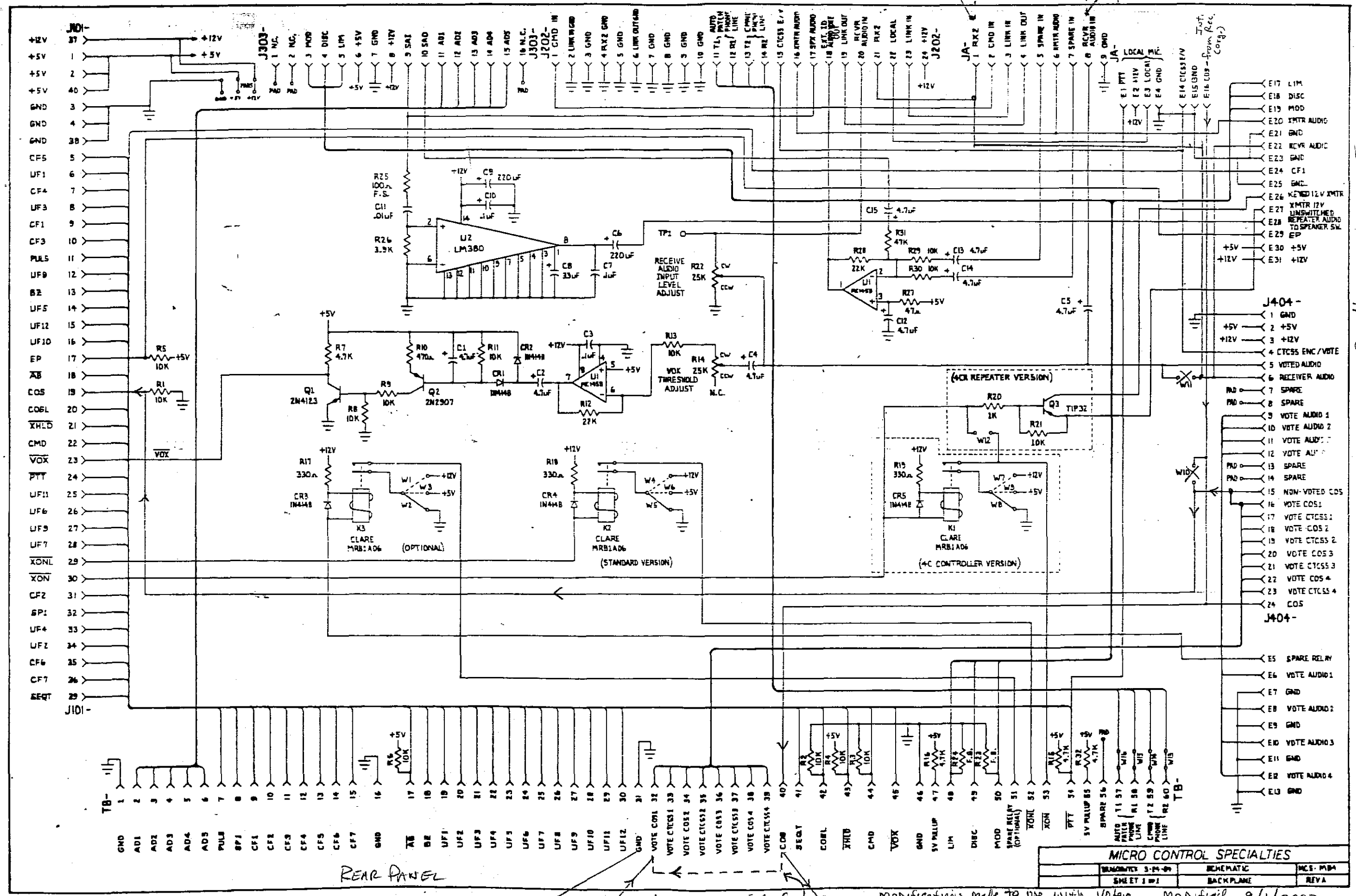

GND to Voter TB-17 & TB-21

COS from Voter TB-25

Jumper required if not using voter

COS to Voter TB2

Modifications made to use with Voter
- Cut jumpers W10 and W11
- Add jumper JA1 to J404-6
- Add jumper J404-15 to J404-16

Modified 9/1/2003
L. MACKLIN, N8CGP

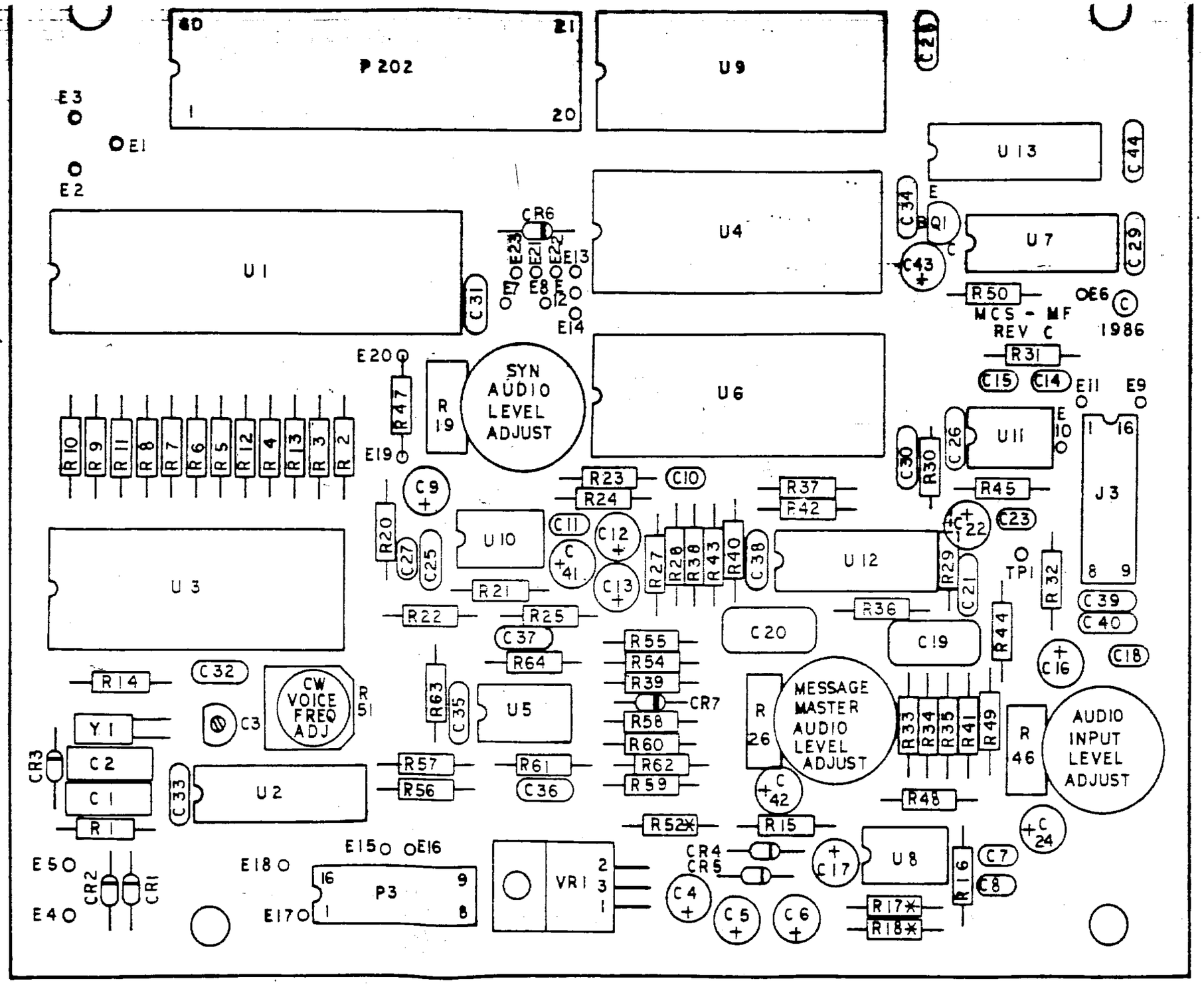

*INSTALLED FOR REV A & B MM BOARDS

MICRO FAX BOARD LAYOUT

ECO#	REV	DESCRIPTION	DWN	DATE	APPD	DATE
~	A1	UPDATED	D.D.	[illegible]		
~	B	REVISED	D.D.	[illegible]		
~	C	REVISED	D.D.	[illegible]		

NOTES:
1. INSTALL R17, R18, & R52 WHEN USED WITH REV A OR REV B MESSAGE MASTER BOARDS.

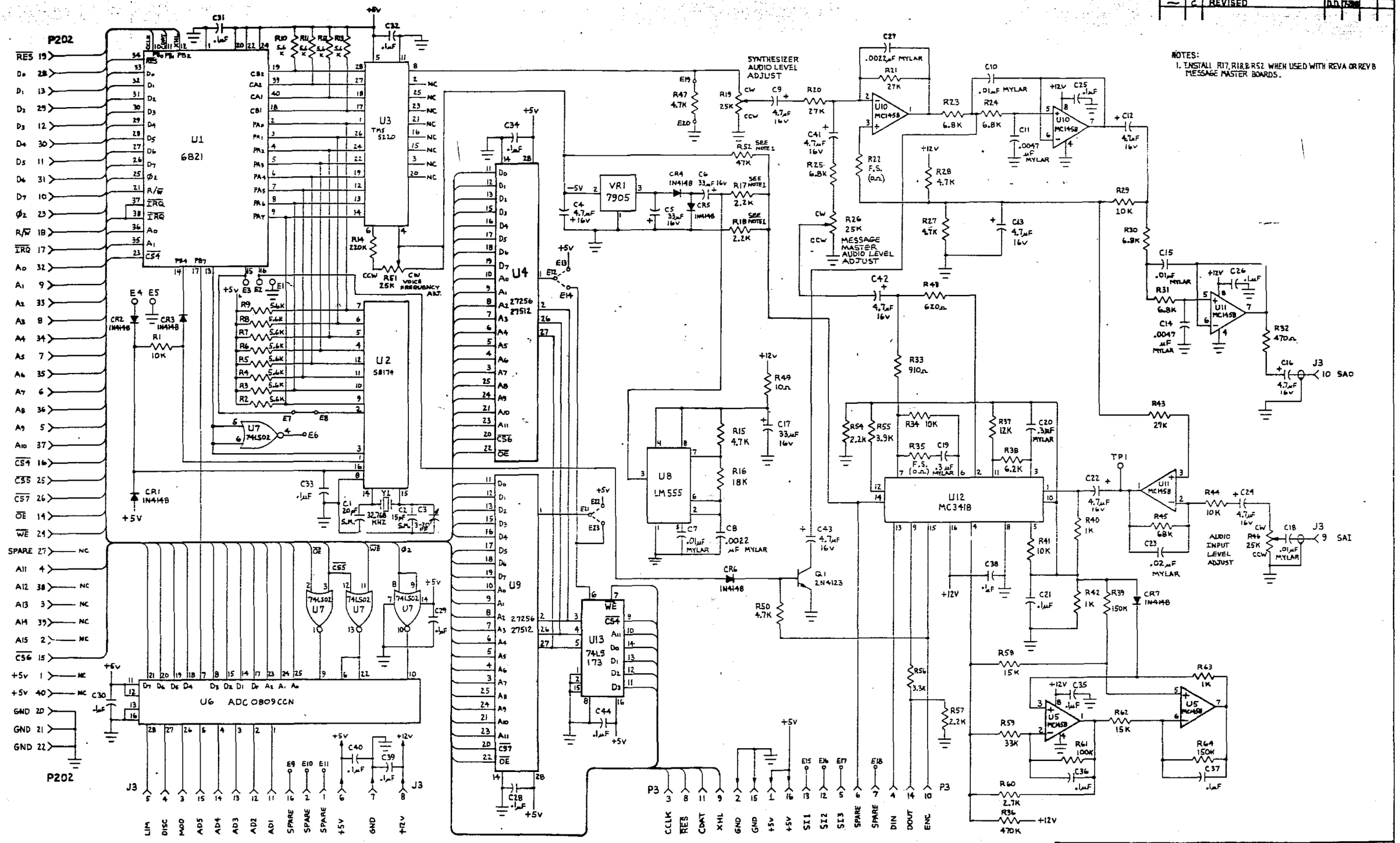

MICRO CONTROL SPECIALTIES		
DRAGONWICK 3-26-84	SCHEMATIC	MCS-MF
SHEET 1 of 1	MICRO FAX BOARD	REV C

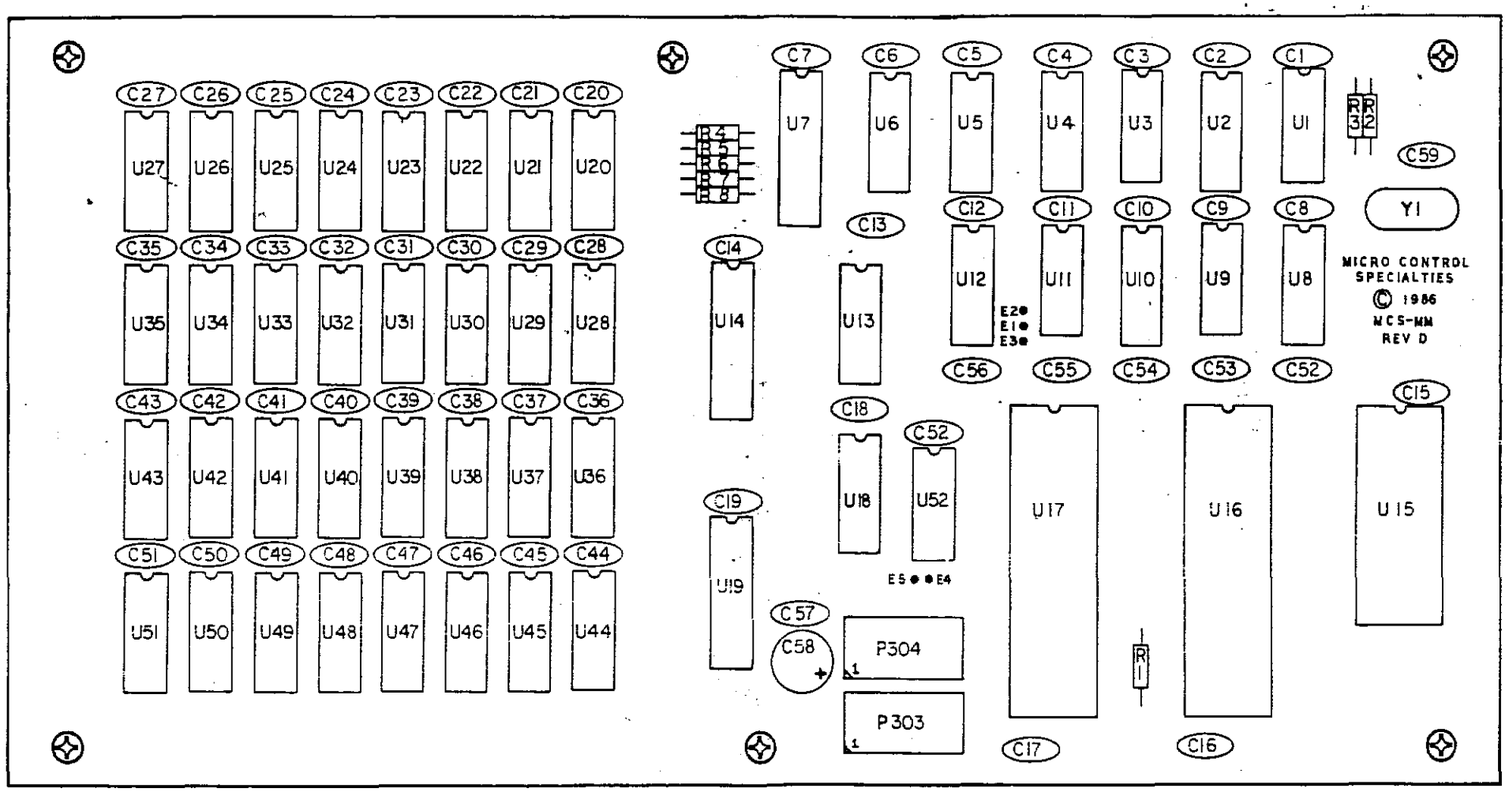

MESSAGE MASTER BOARD LAYOUT

MICRO CONTROL SPECIALTIES	
23 ELM PARK GROVELAND, MA. 01834	
SCALE 2 x 1	DRAWN BY DRAGONWYCK
DATE 10/14/86	
ASSEMBLY DRAWING	
MM (BRD-1) P.C. BOARD REV D	DRAWING NUMBER MCS-MM

ECO#	REV	DESCRIPTION	BY	DATE	APP'D	DATE
~	C	UPDATED	D.D.	[illegible]		
~	D	UPDATED	D.D.	[illegible]		

SPARES

NOTES

1. * IC'S U20-U51 MAY BE EITHER IMS2600 OR MB81256.

U17 R6522

U15 2764/ 27128/ 27256

U16 6502

MICRO CONTROL SPECIALTIES			
DRAGONWYCK 3-21-84	SCHEMATIC	MCS-MM	
SHEET 1 OF 1	MESSAGE MASTER	REV D	

REV	DESCRIPTION	APP'D	DATE
A2	REVISED		10/14/83
A3	REVISED & RELEASED	WRD	11/3/83

INSTALL FARSIDE
Q1, C6, C7

INSTALL FARSIDE
Q2, C17, C18

INSTALL FARSIDE
C107

INSTALL FARSIDE
C106

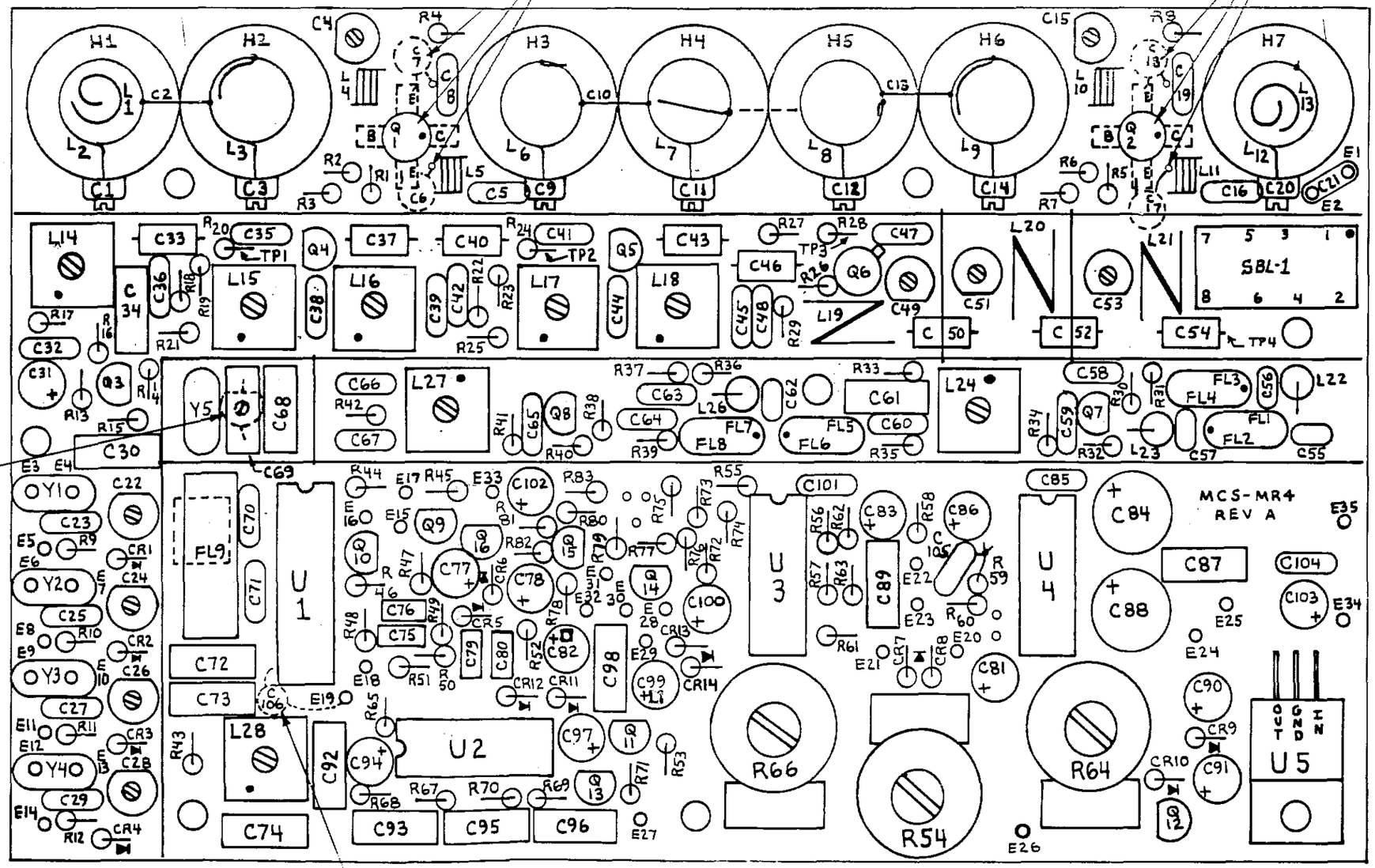

MICRO CONTROL SPECIALTIES		
23 ELM PARK GROVELAND, MA. 01834		
2 x 1		
8 23 83	WILLIAM R. DEWHIRST	DRAGONWYCK
ASSEMBLY DRAWING		
RECEIVER P.C. BOARD	REV A3	MCS - MRR

THESE DRAWINGS AND SPECIFICATIONS ARE THE PROPERTY OF KENDECOM CORPORATION AND SHALL NOT BE REPRODUCED OR COPIED OR USED AS THE BASIS FOR MANUFACTURE OR SALE OF ANY APPARATUS WITHOUT EXPRESS WRITTEN AUTHORIZATION FROM KENDECOM CORPORATION. NOTICE OF PROPRIETARY PROPERTY.

NOTES
1. ALL RESISTOR VALUES ARE IN OHMS UNLESS OTHERWISE SPECIFIED.
2. ALL CAPACITOR VALUES ARE IN MICRO-FARADS UNLESS OTHERWISE SPECIFIED.
3. S.M. INDICATES SILVER MICA.
4. THE FOLLOWING SYMBOL DENOTES SIGNAL NAME AND SHEET NUMBER(S) NAME 1

REVISIONS				
REV	DESCRIPTION	DWN	APPD	DATE

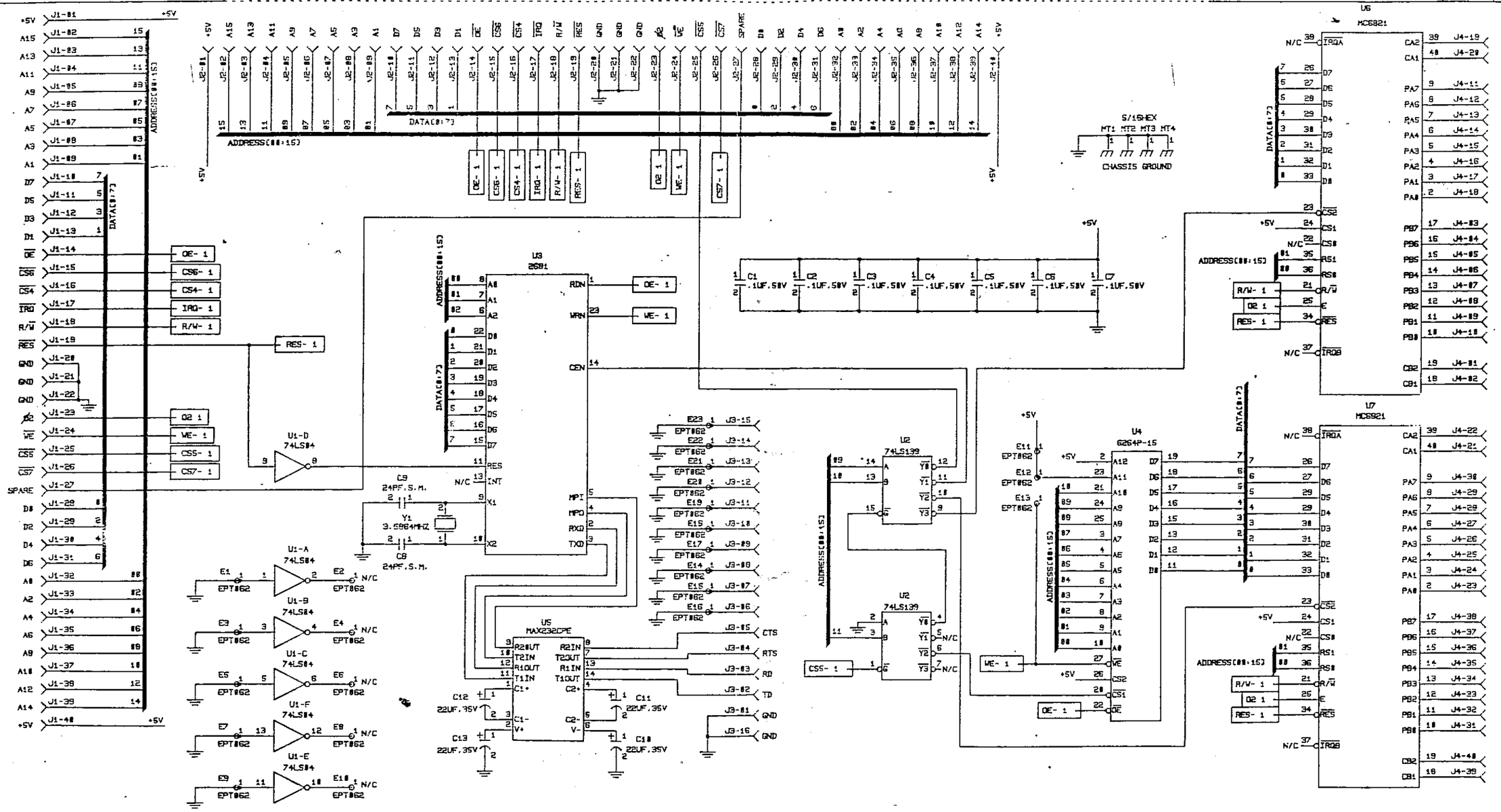

DEVICE TYPE	REFERENCES	IC PACKAGE	+5V	GND
U6, U7	MC6821	40 PIN DIP	28	1
U5	MAX232CPE	16 PIN DIP	16	15
U4	6264P-15	28 PIN DIP	28	14
U3	2681	24 PIN DIP	24	12
U2	74LS139	16 PIN DIP	16	8
U1	74LS04	14 PIN DIP	14	7

C	CR	DS	E	F	J	K	L	P	Q	R	NOT USED
13			29		4						LAST USED
											REF

RN	RT	S	T	TP	U	VR	X	Y	NOT USED
					7			1	LAST USED
									REF

DRAWN	DRAGONWYCK	DATE 4FEB89
CHECKED		DATE
ENGINEER		DATE
ENGR MNGR		DATE
PRODUCTION		DATE

KENDECOM, INC.
23 ELM PARK
GROVELAND, MA 01834

TITLE
SCHEMATIC
MARK 4 I/O
EXPANSION BOARD

SIZE	DWG NO	REV
D	MK4-I/O	A

SCALE NONE SHEET 1 OF 1

KENDECOM, INC.

© 1989

J3

J4

E23
E22
E21
E20
E19
E18
E17

E16
E15
E14

C6

C5

C7

C13
C12
C11
C10

U6

U7

U5

J1

J2

C9

E13
E12
E11

U3

U4

C3

C4

Y1

C8

E10
E9
E8
E7

E6
E5
E4
E3
E2
E1

U1

U2

C1

C2

COMPONENT SIDE

MADE IN U.S.A.

MARK 4 I/O EXPANSION BOARD

MK4-I/O REV A