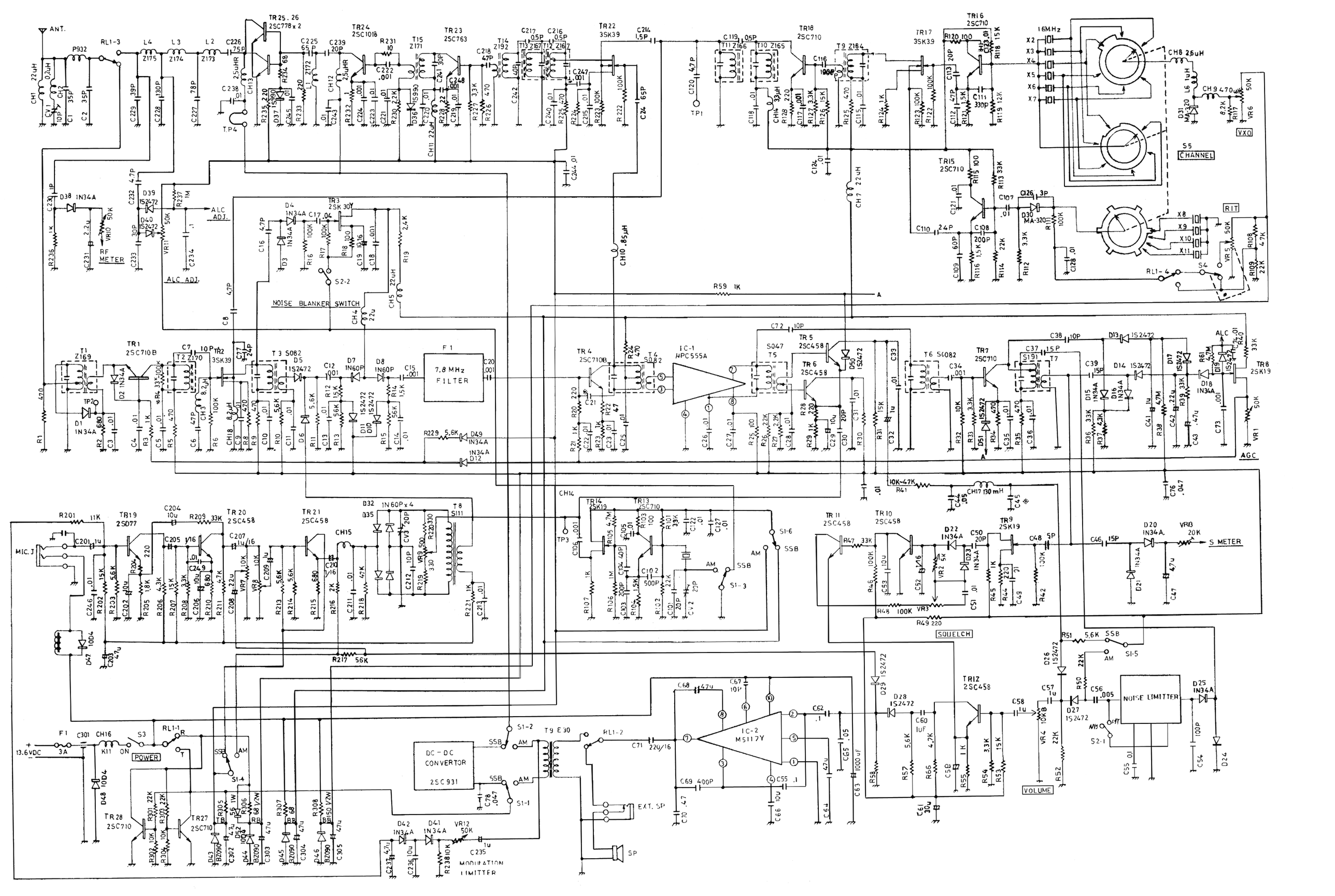
ANT.
TR25.26 2SC778x2
TR24 2SC1018
TR23 2SC763
TR22 3SK39
TR18 2SC710
TR17 3SK39
TR16 2SC710
16MHz
CH8 2.6uH
S5 CHANNEL
VXO
RIT
TR15 2SC710
ALC ADJ.
RF METER
NOISE BLANKER SWITCH
CH10 .85μH
R59 1K
TR1 2SC710B
TR2 3SK39
T3 S082
F1 7.8 MHz FILTER
TR4 2SC710B
IC-1 NPC555A
TR5 2SC458
TR6 2SC458
T6 S0082
TR7 2SC710
TR8 2SK19
AGC
TR19 2SD77
TR20 2SC458
TR21 2SC458
CH15
T8 S111
MIC. J
TR14 2SK19
TR13 2SC710
TR11 2SC458
TR10 2SC458
TR9 2SK19
S METER
SQUELCH
TR12 2SC458
NOISE LIMITTER
VOLUME
POWER
13.6VDC
TR28 2SC710
TR27 2SC710
DC-DC CONVERTOR 2SC931
T9 E30
IC-2 M5117Y
EXT. SP
SP
MODULATION LIMITTER