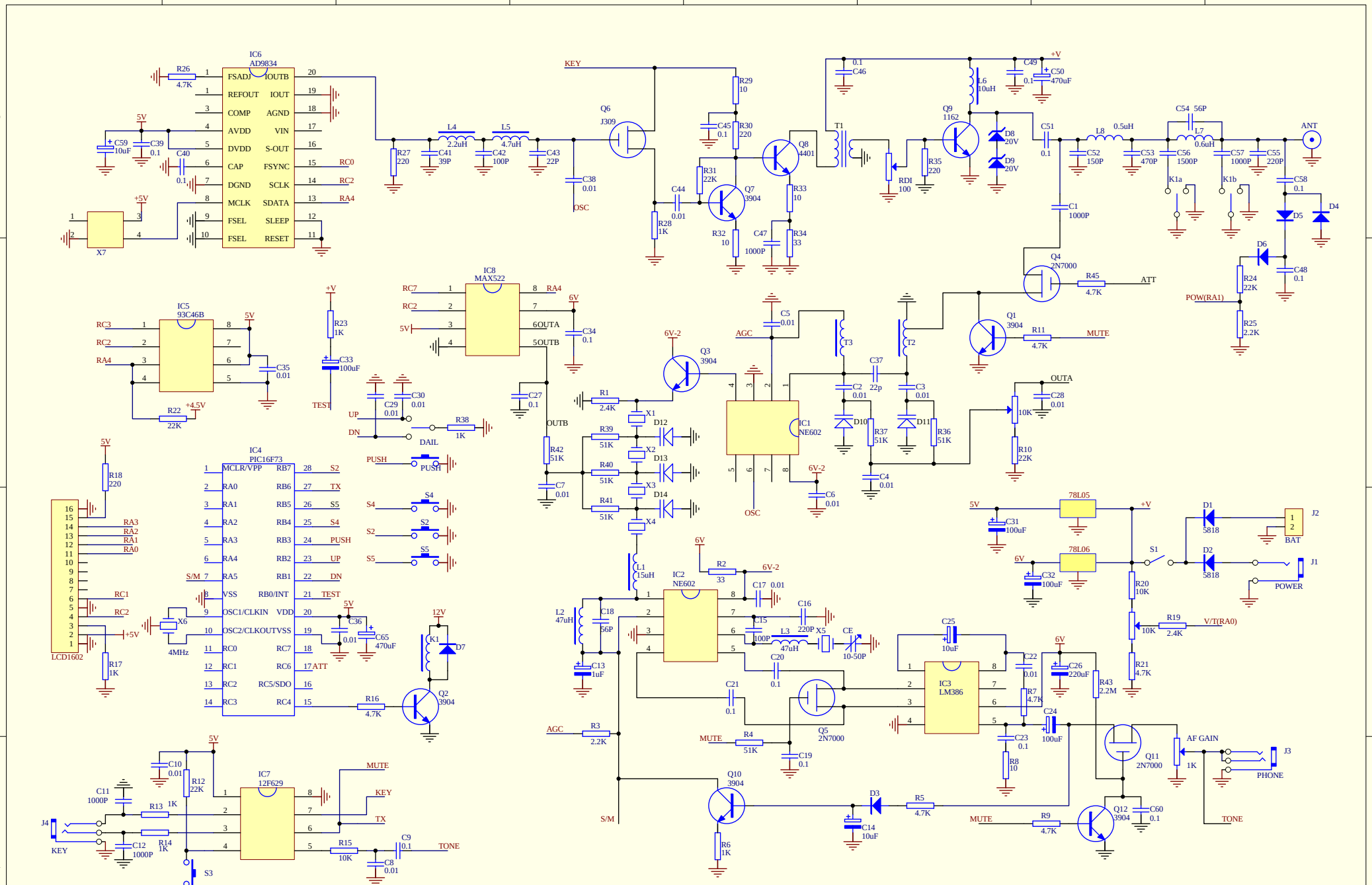
IC6
AD9834
FSADJ
IOUTB
REFOUT
IOUT
COMP
AGND
AVDD
VIN
DVDD
S-OUT
CAP
FSYNC
DGND
SCLK
MCLK
SDATA
FSEL
SLEEP
FSEL
RESET
RC0
RC2
RA4
IC5
93C46B
IC8
MAX522
IC4
PIC16F73
MCLR/VPP
RB7
RA0
RB6
RA1
RB5
RA2
RB4
RA3
RB3
RA4
RB2
RA5
RB1
VSS
RB0/INT
OSC1/CLKIN
VDD
OSC2/CLKOUT
VSS
RC0
RC7
RC1
RC6
RC2
RC5/SDO
RC3
RC4
S/M
ATT
TEST
PUSH
UP
DN
DAIL
S2
TX
S5
S4
LCD1602
RA3
RA2
RA1
RA0
RC1
RC2
4MHz
IC7
12F629
MUTE
KEY
TX
TONE
S3
J4
KEY
KEY
Q6
J309
OSC
Q7
3904
Q8
4401
Q9
1162
T1
T2
T3
Q4
2N7000
Q1
3904
Q3
3904
IC1
NE602
OSC
IC2
NE602
IC3
LM386
Q5
2N7000
Q10
3904
Q11
2N7000
Q12
3904
Q2
3904
K1
D7
12V
AGC
MUTE
S/M
OUTA
OUTB
POW(RA1)
ATT
MUTE
ANT
K1a
K1b
D4
D5
D6
D8
20V
D9
20V
D10
D11
D12
D13
D14
X1
X2
X3
X4
X5
X6
CE
10-50P
L1
15uH
L2
47uH
L3
47uH
L4
2.2uH
L5
4.7uH
L6
10uH
L7
0.6uH
L8
0.5uH
78L05
78L06
+V
5V
6V
6V-2
+5V
+4.5V
+V
BAT
J2
J1
POWER
S1
V/T(RA0)
AF GAIN
J3
PHONE
TONE
D1
5818
D2
5818
D3
C14
10uF
R5
4.7K
MUTE
R9
4.7K
R6
1K
R4
51K
C19
0.1
R3
2.2K
R2
33
R16
4.7K
R17
1K
R18
220
R22
22K
R23
1K
R26
4.7K
R27
220
R29
10
R30
220
R31
22K
R32
10
R33
10
R34
33
R35
220
R36
51K
R37
51K
R38
1K
R39
51K
R40
51K
R41
51K
R42
51K
R45
4.7K
R11
4.7K
R24
22K
R25
2.2K
R10
22K
R20
10K
R19
2.4K
R21
4.7K
R43
2.2M
R7
4.7K
R8
10
R1
2.4K
R12
22K
R13
1K
R14
1K
R15
10K
C9
0.1
C8
0.01
C10
0.01
C11
1000P
C12
1000P
C59
10uF
C39
0.1
C40
0.1
C41
39P
C42
100P
C43
22P
C38
0.01
C44
0.01
C45
0.1
C46
0.1
C47
1000P
C49
0.1
C50
470uF
C51
0.1
C52
150P
C53
470P
C54
56P
C56
1500P
C57
1000P
C55
220P
C58
0.1
C48
0.1
C1
1000P
C2
0.01
C3
0.01
C4
0.01
C5
0.01
C6
0.01
C7
0.01
C27
0.1
C28
0.01
C34
0.1
C35
0.01
C33
100uF
C29
0.01
C30
0.01
C37
22p
C31
100uF
C32
100uF
C36
0.01
C65
470uF
C16
C15
100P
C17
0.01
C20
0.1
C21
0.1
C13
1uF
C18
56P
C25
10uF
C22
0.01
C26
220uF
C24
100uF
C23
0.1
C60
0.1
R25
2.2K
R28
1K
R31
22K
R32
10
R33
10
R34
33